HUDSON

Mechanical Procedure Manual

1941

HUDSON MOTOR CAR COMPANY
DETROIT, MICHIGAN

HUDSON BUILT CARS AUTHORIZED SERVICE

INTRODUCTION

This Mechanical Procedure Manual is to supply information of value in diagnosis and repair, including information on changes which affect procedure in servicing.

FLAT RATE. The procedures given in this manual are identical to those followed in setting time allowances for Flat Rate Schedules and should be valuable as a guide where actual shop time does not compare favorably with the schedules. A study of the operations together with the tool equipment used in their performance should enable each HUDSON SERVICE STATION to offer its owners reliable service at a reasonable cost.

INSPECTION SERVICE. This manual does not go into the details of pre-delivery, 500 and 1500 mile inspections; however, particular attention should be paid to carrying out these inspections in accordance with the procedure given on the inspection cards which are available from the factory for each model.

The items included in these inspections are those which experience has shown require attention during the early life of the car to insure long, carefree service, in addition to items which, though checked carefully at the time of manufacture, require additional checks to insure proper operation. The owner when accepting delivery of the car expects it to be in perfect condition. A good first impression will aid you in your future contacts as well as do much to insure satisfactory performance of the car. Make these inspections carefully and file the inspection card as a permanent part of the record of the car.

KEYS AND LOCKS. A record of the key numbers made on the pre-delivery card, in the space provided, will help you render a valuable service to your owners in cases of lost keys.

WARRANTY AND OWNER'S SERVICE POLICY is fully covered in the General Service Policies Manual which should be referred to on any question of Owner, Dealer, Distributor or Factory responsibility.

SPECIAL TOOLS referred to or illustrated in this manual have been developed through the cooperation of the Hudson Motor Car Company Service Department with the Hinckley-Myers Company of Jackson, Michigan.

Special tools are developed only where it is found that such a tool is essential to good workmanship or the time saving is sufficient to warrant its cost.

The tools are of highest quality and are sold direct by the tool manufacturer to make them available to Hudson Distributors and Dealers at minimum cost.

FOR COMPLETE LIST OF TOOLS AND SHOP EQUIPMENT REFER TO THE HUDSON TOOL MANUAL.

INDIVIDUAL PARTS BOOKS are available for each yearly model while a Master Parts Book showing interchangeability of parts is also available. These books and the Numerical Parts Price List should be used as reference for parts information.

SERVICE BULLETINS issued from time to time should be filed in the Bulletin Binder. With a cross reference entered on the blank page provided at the end of each section of this manual. These references will serve to keep the Mechanical Procedure Manual up to date.

HUDSON SERVICE MAGAZINE is published monthly and contains timely service information, which should be tied in with the material in this manual.

MATERIAL FOR MAGAZINE. The technical information in the magazine is based on the experience of the Engineering, Manufacturing and Service Divisions at the factory and also on reports and suggestions received from Distributor and Dealer Service Departments. Any suggestions for improved methods of servicing, short cuts, special tools, etc., developed in the servicing of Hudson cars which will assist you in your work will also assist the thousands of other Service Men. Submit your suggestions to the Technical Division of the Factory Service Department, so that they may be passed on through the medium of Hudson Service.

Copyright 1940 by
HUDSON MOTOR CAR COMPANY
All Rights Reserved

Lithographed in U. S. A.

SECTION INDEX

SECTION	NAME	PAGE
1	Lubrication	5
2	Engine Tune-up	14
3	Fuel System - includes: Carburetor, Fuel Gauge, Fuel Pump, Gasoline Tank	32
4	Cooling System - includes: Fan, Radiator, Water Pump	78
5	Electrical System - includes: Battery, Direction Indicator, Distributor, Generator, Horns, Ignition Coil, Lamps, Lighting Switch, Oil Pressure Indicator, Starting Motor, Switches, Water Temperature Gauge	89
6	Engine	125
7	Clutch - includes: Standard and Vacuum Clutch Control	155
8	Transmission - includes: Handy Shift, Overdrive, Standard Transmission	177
9	Rear Axle	210
10	Brakes	223
11	Suspension - includes: Auto Poise, Front Suspension, Rear Springs, Rear Suspension, Shock Absorbers	239
12	Steering Gear - includes: Drag Link	271
13	Chassis - includes: Exhaust Manifold, Exhaust Pipes, Frame, Muffler, Propeller Shaft, Universal Joints, Wheels and Tires	280
14	Sheet Metal - includes: Bonnet, Fenders, Louver Panel, Running Boards	293
15	Body	297

GENERAL INDEX

SUBJECT	PAGE
Air Cleaner (Section 3)	63
Air Cleaner - Oil Bath	63
Air Cleaner - Standard	63
Auto-Poise (Section 11)	260
Axle - Rear (Section 9)	210
Axle Shaft Replacement	219
Description	210
Differential Disassembly	214
Differential Carrier and Gear Set	213
Drive Gear and Pinion Adjustment	218
Housing Replacement	218
Noises	221
Pinion and Bearings Adjustment	217
Rear Spring Mounting	221
Specifications	210
Thrust Button Renewal	219
Battery (Section 5)	92-96-102
Bulb Specifications (Section 5)	92
Body (Section 15)	
Air Foam Seat Cushion Pad	317
Arm Rest	318
Body Header	300
Care of Car Interior	318
Care of Chromium Finish	319
Care of Finish	319
Door Alignment	306
Door Cylinder Lock	309
Door Glass	314
Door Hinges	306
Door Lock Cylinder Blanks	309
Door Lock Remote Control	314
Body (Section 15) - Cont'd.	
Door Lock Removal	313
Door Striker	307
Door Wing	311
Finish Mouldings	310
Front End Assembly	297
Headlining	317
Ignition Lock Cylinder	309
Inside Door Handles	310
Instrument Panel	302
Locker Box Lock	309
Outside Mouldings	302
Pillars	300
Quarter Panel	297
Quarter Windows	305
Quarter Window Drain Troughs	317
Rear Panel - Lower	302
Rear Window	305
Roof Drip Moulding	301
Roof Panel	298
Sealing	302
Top Bows	317
Trunk and Compartment Lock	310
Underbody Panel	301
Upholstered Panels	310
Windshield	302
Window Regulators	311
Bolt and Nut Tightening Specifications	282
Bonnet (Section 14)	293
Mouldings	293
Lamps	294
Brakes (Section 10)	223
Bleeding	229

GENERAL INDEX

SUBJECT	PAGE
Brakes (Section 10) - Cont'd.	
Complete Adjustment	232
Fluid	228
Hand Brake	230
Hydraulic System	228
Lining - Replacement	234
Lining Wear	231
Maintenance Hints	235
Master Cylinder	225
Mechanical System	223
Minor Adjustment	231
Parking Brake	225
Pedal Adjustment	230
Shoe Disassembly	234
Specifications	223
Trouble Shooting	235
Wheel Cylinder	226
Carburetor (Section 3)	32
Anti-Percolating Valve	54
Assembling, Models 10, 18	38
Assembling, Models 11, 12, 14, 15, 17	42
Check-Up	62
Choke Circuit	58
Climatic Control	58
Disassembling, Models 10, 18	36
Disassembling, Models 11, 12, 14, 15, 17.	41
Fast Idle	51
Float Circuit	46
Governor	63
High Speed Circuit	51
Idle Adjustment	50
Installing	36
Lockout	61
Low Speed Circuit	47
Metering Rod	53
Pump Circuit	56
Specifications	32
Tools	45
Unloader	60
Clutch (Section 7)	155
Adjustment	161
Assembling	160
Disassembling	160
Inspection	159
Lubrication	158
Over-center Spring	157
Operation	157
Pedal Adjustment	158
Pilot Bearing	160
Pressure Plate	160
Removal	159
Specifications	155
Clutch - Vacuum or Automatic Control(Sec.7)	
Adjustments	167
Check-up	169
Kit	172
Kit Installation	173
Operation	163
Wiring Test	172
Coil, Ignition (Section 5)	91-114
Cooling System (Section 4)	78
Anti-Freeze	78
Capacities	78
Circulation	79
Draining	79
Fan Belt Adjustment	86
Inhibitor	80
Radiator	79
Reverse Flushing	80
Thermostat	87
Water Pump Assembling	85
Water Pump Disassembly	83
Water Pump Hose	83
Water Pump Lubrication	82
Water Pump Removal	82
Water Temperature Gauge	87

SUBJECT	PAGE
Direction Indicator (Section 5)	118
Distributor (Section 5)	89-107
Drag Link (Section 12)	278
Electrical (Section 5)	
Battery	92-96-102
Coil - Ignition	91-114
Distributor	89-107
Automatic Spark Control	108
Breaker Points	110
Ground Test	113
Inspection	108
Lubrication	109
Specifications	89
Timing Setting	110
Tune-up	109
Electrical Parts	
Bulb Specifications	92
Direction Indicator	118
Fuses	120
Generator Charging Indicator	120
Headlamp	116
Horns	93-121
Ignition Lock	114
Instrument Light Rheostat	116
Lamps - Fender, Bonnet, Dome, License	123
Lamps - Head	116
Lighting Switch	115
Oil Pressure Indicator (See Engine Sec.)	132
Stop Light Switch	116
Water Temperature Gauge (See Cooling Section)	87
Generator	89
Disassembly	99
Fan Belt Adjustment	101
Lubrication	101
Output	97
Overhaul	99
Polarity	102
Running as a Motor	102
Special Duty Generators	93
Specifications	89
Testing Equipment	96
Tune-Up	98
Voltage Regulator,	97
Spark Plugs	113
Starting Motor	91-103
Bendix Drive	106
Cables and Cable Connections	104
Disassembly	105
Inspection	103
Lubrication	104
Removal	105
Solenoid Switch	105
Specifications	91
Test	104
Tune-Up	103
Voltage Drop	105
Engine (Section 6)	125
Camshaft	149
Connecting Rods	144
Crankshaft and Bearings	135
Cylinder Head	138
Exhaust	135
Installing	134
Mounting	133
Oil Filter	131
Oil Pressure Indicator	132
Oiling System	129
Pistons	140
Removal	134
Specifications	125
Support	133
Timing Gears	148
Valves and Tappets	151
Valve Timing	153
Vibration Dampener	151

GENERAL INDEX

SUBJECT	PAGE
Engine Tune-Up (Section 2)	14
Exhaust System (Section 13)	286
Manifolds	286
Manifold Heat Control Valves	287
Manifold and Exhaust Pipe Removal	287
Muffler	286
Tail Pipe Removal	287
Fan (Section 4)	86
Fender Lamp	123
Fenders (Section 14)	294
Frame (Section 13)	283
Alignment	284
Front Suspension (Section 11),	239
Alignment	241
Auto-Poise	260
Bushings	240
Camber	241
Caster	243
Coil Spring	247
General Inspection	240
Pivot Pin Inclination	242
Pivot Pin Rebushing Kit	252
Removal	246
Riding Height	247
Setting Steering on Dead Center	246
Straightening Bent Parts	257
Steering Gear High Point	246
Steering Geometry	246
Tie Rod	257
Toe-In	245
Toe-Out	246
Trouble Shooting	257
Fuel Pump (Section 3)	64
Delivery Pressure Test	69
Disassembly of Combination Fuel & Vacuum.	70
Disassembly	65
Fuel Delivery Test	69
Installation of Combined Fuel & Vacuum	72
Installation of Fuel Pump	67
Operation of Combined Fuel & Vacuum	70
Operation of Fuel Pump	64
Specifications	69
Testing	68
Trouble Chart for Fuel Pump	68
Trouble Chart for Vacuum Pump	70
Types Used	64
Fuel or Gasoline Level Gauge (Section 3)	75
Fuses (Section 5),	120
Gasoline Tank (Section 3)	77
General Specifications	280
Generator (Section 5	93
Generator Charging Indicator (Section 5)	120
Handy Shift	191
Headlamp (Section 5)	116
Horns (Section 5)	93-121
Ignition Coil (Section 5)	91-114
Ignition Lock (Section 5)	114
Instrument Light Rheostat (Section 5)	116
Lamps - Head,	116
Fender, Bonnet, Dome, License	123

SUBJECT	PAGE
License Information	280
Lighting Switch (Section 5)	115
Louvre Panel (Section 14)	293
Lubrication (Section 1)	5
1,000 - 2,000 Miles	5
5,000 - 10,000 - 20,000 Miles	8
Brake Operating Linkage	12
Clevis Pins	12
Clutch	12
Differential	11
Distributor	11
Door Dovetails and Hinges	12
Drag Link	11
Engine Oil	9
Generator	12
Hood Locks	12
Levers and Linkage	12
Special Lubricants	10
Spring Covers and Shackles	12
Steering Gear and Spindles	12
Throttle Control Rods	12
Transmission	11
Universal Joints	13
Water Pump	11
Wheel Bearings	12
Zerk Fittings	12
Overdrive	196
Propeller Shaft	285
Radiator Louvre Panel (Section 14)	294
Radiator Lower Tank Shield (Section 14)	294
Rear Suspension (Section 11)	261
Rear Spring	261
Rear Stabilizer	264
Running Boards (Section 14)	295
Shock Absorber (Section 11)	265
Control Changing	265
Disassembly	266
Filling	269
Reassembling	268
Removing	249
Specifications	265
Spark Plugs (Section 5)	113
Starting Motor (Section 5)	91
Steering Gear (Section 12)	271
Stop Light Switch (Section 5)	116
Switches - Electric (Section 5)	114
Transmission	177
Universal Joints (Section 13)	285
Water Temperature Gauge (Section 4)	87
Wheels and Tires (Section 13)	287
Balancing	288
Bearings - Front Wheel	289
Dynamic Balance	290
Installing Tire	287
Inflation of Tire	288
Removal of Tire	287
Run Out of Wheel and Tire	289
Specifications	281
Static Balance	290
Wear of Tires	288

LUBRICATION

After First 500 Miles

Engine Oil ..... See "When to Change Engine Oil," Pages 10 and 11.

1,000 Miles

Upper Support Arm Eccentric Bushing	Viscous Chassis Lubricant	2 fittings
Upper Support Arm Pivot Bushing	Viscous Chassis Lubricant	4 fittings
Lower Support Arm to Support Pivot Bushing.	Viscous Chassis Lubricant	2 fittings
Lower Support Arm Pivot Bushing	Viscous Chassis Lubricant	4 fittings
Spindle Pivot Pin	Viscous Chassis Lubricant	2 fittings
Tie Rod End	Viscous Chassis Lubricant	4 fittings
Drag Link	Viscous Chassis Lubricant	2 fittings
Clutch and Brake Pedal Shaft Bushings	Viscous Chassis Lubricant	1 fitting
Clutch Throwout Bearing	Viscous Chassis Lubricant	1 fitting
Universal Joint Spline	Viscous Chassis Lubricant	1 fitting
Rear Spring Rear Shackle Bushing	Viscous Chassis Lubricant	4 fittings
Water Pump	Alum. Soap Base Lubricant	1 fitting
Rear Axle		Check level
Transmission		Check level

When checking transmission and rear axle oil level wait until the foaming of the oil has subsided. If the car has been run for any length of time it should be allowed to stand long enough to allow the oil to reach its actual level before checking.

Brake Master Cylinder	Check level
Steering Gear	Check level
Engine	Check oil level
Battery	Check water level
Radiator	Check water or anti-freeze level

2,000 Miles

Perform operations listed under 1,000-mile lubrication in addition to the following:

Engine	Drain and refill	See Page 10 on oil to use
Generator	Light Engine Oil	2 cups
Starting Motor	Light Engine Oil	2 cups
Distributor--6 cylinder	High Temperature Grease	Turn grease cup 1 turn
Distributor--6 cylinder	Light Engine Oil	Contact arm pivot and top of rotor shaft
Distributor--6 and 8 cylinder	High Pressure Grease	Cam lobe
Distributor--8 cylinder	Light Engine Oil	Oil cup, contact arm pivot and top of rotor shaft
Throttle Linkage	Light Engine Oil	All joints
Door Hinges	Light Engine Oil	One hole in each lower front door hinge
Door Dovetails and Striker ..	Light Engine Oil	Two places each door
Bonnet Support and Lock Support	Light Engine Oil	8 places
Brake Operating Linkage	Light Engine Oil	9 places
Carburetor Air Cleaner	Same Grade Oil as Used in Engine	9 places
		Clean and re-oil

LUBRICATION HUD

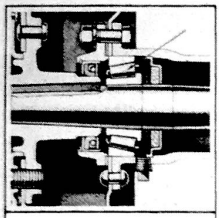

10,000 MILES
REAR WHEEL BEARING
USE MILLED SODIUM SOAP BASE LUBRICANT
CAPACITY—1½ OUNCES

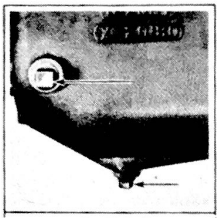

WITH SEASON TRANSMISSION
USE GEAR OIL
SUMMER S.A.E. 90 E.P.
WINTER S.A.E. 80 E.P.
CAPACITY—2 POUNDS
WITH OVERDRIVE—3¼ POUNDS
CHECK LEVEL FREQUENTLY

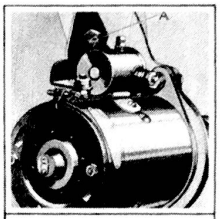

5000 MILES
CLUTCH
USE HUDSONITE CLUTCH LUBRICANT
CAPACITY—½ PINT

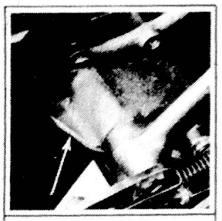

1000 MILES
BRAKE AND CLUTCH PEDAL BEARINGS FITTING
USE VISCOUS GREASE
2000 MILES
BRAKE, CLUTCH AND THROTTLE CONTROL LINKAGE
USE ENGINE OIL

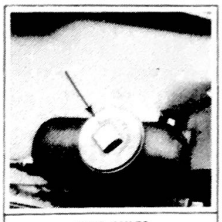

1000 MILES
CHECK LEVEL
BRAKE MASTER CYLINDER
USE ONLY GENUINE HUDSON HYDRAULIC BRAKE FLUID NO. 21 FOR ALL TEMPERATURES

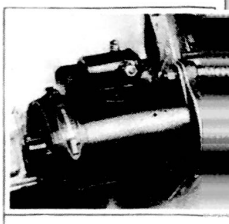

2000 MILES
STARTING MOTOR FRONT AND REAR BEARINGS
USE ENGINE OIL

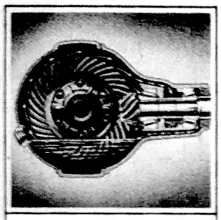

WITH SEASON DIFFERENTIAL
USE GEAR OIL
SUMMER AND WINTER
S.A.E. 90 E.P.
CHECK LEVEL FREQUENTLY
CAPACITY—2¾ POUNDS

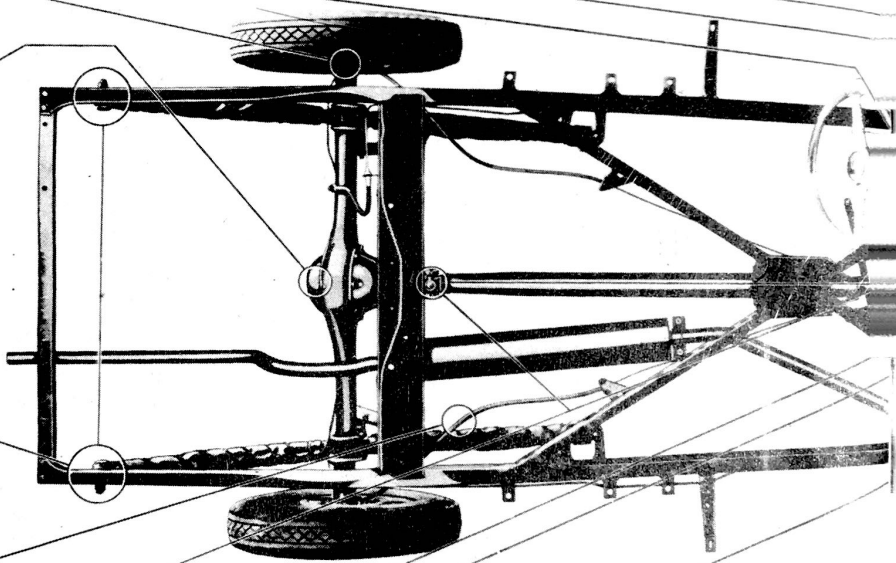

1000 MILES
SPRING SHACKLE
USE VISCOUS GREASE



5000 MILES
BRAKE CONDUITS AND CABLES
VISCOUS GREASE



1000 MILES
UNIVERSAL JOINT SPLINE
USE VISCOUS GREASE
20,000 MILES
DISASSEMBLE, CLEAN AND REPACK NEEDLE ROLLER BEARINGS
USE VISCOUS GREASE

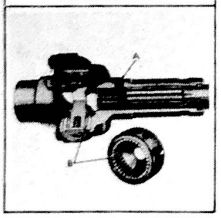

1000 MILES
CLUTCH RELEASE BEARING
USE VISCOUS GREASE

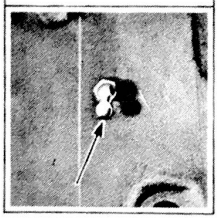

2000 MILES
DISTRIBUTOR
ADVANCE CAM—HIGH TEMPERATURE GREASE
CONTACT ARM PIVOT—ENGINE OIL
TOP OF SHAFT—ENGINE OIL
6-CYL.—SHAFT GREASE CUP
HIGH TEMPERATURE GREASE
8-CYL.—SHAFT OIL CUP—ENGINE OIL

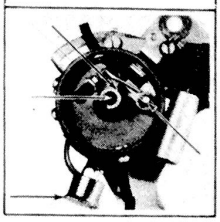

2000 MILES
GENERATOR BEARINGS
USE ENGINE OIL

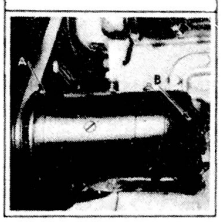

2000 MILES
AIR CLEANER—STANDARD
WASH IN GASOLINE AND LUBRICATE WITH ENGINE OIL—SAME GRADE AS USED IN ENGINE
AIR CLEANER—OIL BATH
WITHDRAW FILTER AND WASH PARTS IN GASOLINE
FOUR 1 PINT OIL SAME GRADE AS IN ENGINE IN CLEANER BODY AND REASSEMBLE

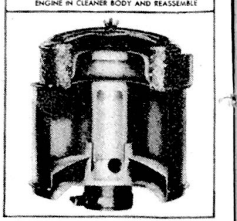

GENERAL LUBRICATION INFORMATION

ENGINE LUBRICATION

LEVEL SHOULD BE CHECKED FREQUENTLY

CAPACITY

6 CYLINDER.....5½ QTS. (4½ I.Q.—5½ L.)
8 CYLINDER.....9 QTS. (7 I.Q.—8½ L.)

REFILL CAPACITY

6 CYLINDER.....4½ QTS. (3¾ I.Q.—4¼ L.)
8 CYLINDER.....7 QTS. (6 I.Q.—6½ L.)

ENGINE OIL SHOULD BE DRAINED AFTER EXPIRATION OF FIRST 500 MILES OF DRIVING AND THEREAFTER AT INTERVALS OF 2,000 MILES, UNLESS DUSTY CONDITIONS OR INDIVIDUAL DRIVING CHARACTERISTICS WARRANT MORE FREQUENT CHANGING. REFILL ACCORDING TO THE FOLLOWING RECOMMENDATIONS.

110° to 70°.....Use S.A.E. 30
90° to 32°.....Use S.A.E. 20
70° to 10°.....Use 20 W.
40° to −10°.....Use 10 W.
−10° to −30°.....Use 10 W. plus 10% kerosene

TRANSMISSION (AND OVERDRIVE)

TRANSMISSION LUBRICANT SHOULD BE CHECKED EVERY 1,000 MILES. WHEN CHECKING LEVEL BE SURE CAR HAS BEEN PERMITTED TO STAND LONG ENOUGH FOR OIL FOAM TO SUBSIDE. THIS INSURES CHECKING ACTUAL LEVEL.

S.A.E. 90 E.P. IS RECOMMENDED FOR SUMMER AND S.A.E. 80 E.P. FOR WINTER. LUBRICANT USED SHOULD BE OF A MILD EXTREME PRESSURE NATURE AND MUST BE NON-CORROSIVE.

REAR AXLE LUBRICANT

REAR AXLE LUBRICANT LEVEL SHOULD BE CHECKED EVERY 1,000 MILES. WHEN CHECKING LEVEL BE SURE CAR HAS BEEN PERMITTED TO STAND LONG ENOUGH FOR OIL FOAM TO SUBSIDE. THIS INSURES CHECKING ACTUAL LEVEL.

S.A.E. 90 E.P. IS RECOMMENDED FOR ALL SEASONS. LUBRICANT SHOULD BE OF A MILD EXTREME PRESSURE NATURE AND MUST BE NON-CORROSIVE.

SPRING COVERS

REAR SPRING COVERS SHOULD BE REMOVED AND REPACKED WITH VISCOUS CHASSIS GREASE EVERY 10,000 MILES.

SON 1941 MODELS

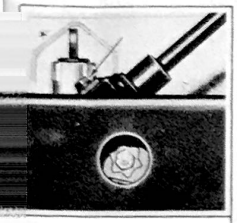

WITH SEASON
STEERING GEAR
USE GEAR OIL
SUMMER AND WINTER
S.A.E. 90 E.P.

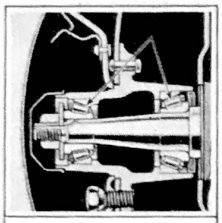

10,000 MILES
FRONT WHEEL
BEARINGS
USE MILLED SODIUM SOAP
BASE LUBRICANT
CAPACITY—4 OUNCES



2000 MILES
CRANKCASE
DRAIN AND REFILL
ENGINE OIL
(SEE OIL SPECIFICATIONS)
CHECK LEVEL FREQUENTLY

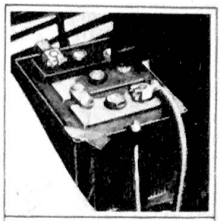

1000 MILES
BATTERY
ADD DISTILLED WATER
TO KEEP PLATES COVERED

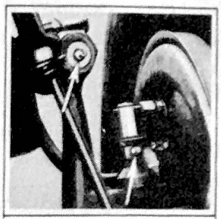

1000 MILES
UPPER SUPPORT ARM
ECCENTRIC BUSHING
1-FITTING
STEERING SPINDLE PIVOT PIN
1-FITTING
USE VISCOUS GREASE

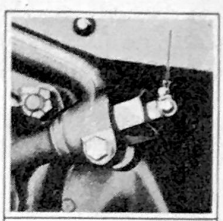

1000 MILES
UPPER SUPPORT ARM
PIVOT BUSHING
4-FITTINGS
USE VISCOUS GREASE

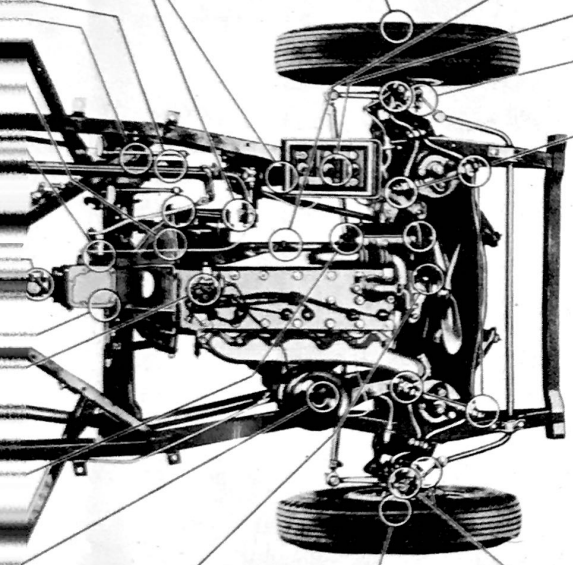

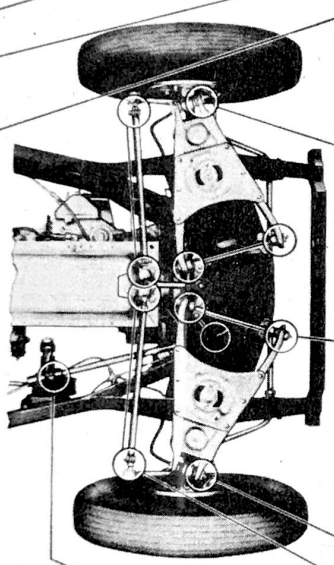



1000 MILES
LOWER SUPPORT ARM TO
SUPPORT PIVOT BUSHING
1-FITTING
USE VISCOUS GREASE

1000 MILES
LOWER SUPPORT ARM
PIVOT BUSHING
4-FITTINGS
DRAG LINK—FRONT END
1-FITTING
USE VISCOUS GREASE

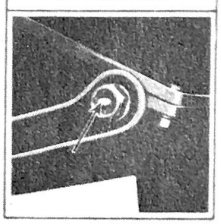

1000 MILES
WATER PUMP SHAFT
USE ALUMINUM SOAP GREASE

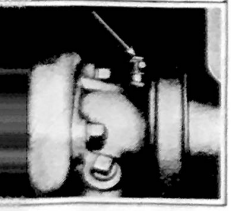

10,000 MILES
FRONT WHEEL
BEARINGS
USE MILLED SODIUM SOAP
BASE LUBRICANT
CAPACITY—4 OUNCE

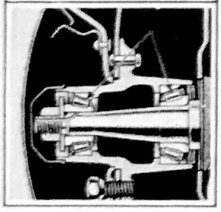

1000 MILES
UPPER SUPPORT ARM
ECCENTRIC BUSHING
1-FITTING
STEERING SPINDLE PIVOT PIN
1-FITTING
USE VISCOUS GREASE

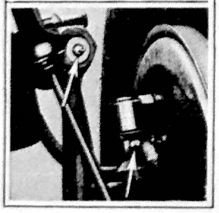

1000 MILES
DRAG LINK—REAR END
1-FITTING
USE VISCOUS GREASE

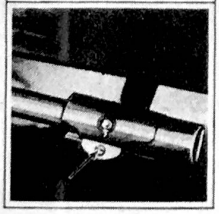

1000 MILES
TIE ROD ENDS
4-FITTINGS
USE VISCOUS GREASE

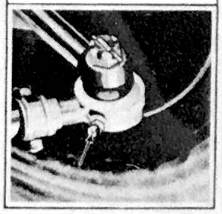

1000 MILES
LOWER SUPPORT ARM TO
SUPPORT PIVOT BUSHING
1-FITTING
USE VISCOUS GREASE

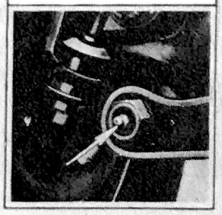

PROPELLER SHAFT AND UNIVERSAL JOINTS

UNIVERSAL JOINTS ARE LUBRICATED AT TIME OF ASSEMBLY. AT INTERVALS OF 20,000 MILES THE PROPELLER SHAFT SHOULD BE REMOVED AND UNIVERSAL JOINTS DISASSEMBLED AND REPACKED WITH VISCOUS CHASSIS GREASE.

THE SPLINE SHAFT SHOULD BE LUBRICATED AT INTERVALS OF 1,000 MILES WITH VISCOUS CHASSIS GREASE. THE PIPE PLUG IN THE FRONT JOINT SHOULD BE REMOVED AND A SUITABLE GREASE FITTING INSTALLED. BE SURE FITTING IS REMOVED AFTER GREASING IS COMPLETED TO PREVENT DISTURBING THE BALANCE OF THE PROPELLER SHAFT.

BODY LUBRICATION

DOOR DOVETAIL WICKS AND DOOR STRIKER WICKS SHOULD BE LUBRICATED WITH A FEW DROPS OF LIGHT ENGINE OIL EVERY 1,000 MILES.

LOWER FRONT DOOR HINGE SHOULD BE LUBRICATED WITH A FEW DROPS OF ENGINE OIL, THROUGH OIL HOLE ACCESSIBLE WHEN DOOR IS OPENED, EVERY 1,000 MILES.

RUBBER BUMPERS AND DOOR STRIKER CONTACT SURFACES SHOULD BE LUBRICATED WITH A PENCIL LUBRICANT EVERY 1,000 MILES.

BE SURE TO WIPE OFF ALL EXCESS LUBRICANT.

TIRE PRESSURES

MAINTAINING CORRECT TIRE PRESSURE IS ESSENTIAL TO OBTAIN MAXIMUM TIRE LIFE.

CHECK PRESSURES AND INFLATE TO FOLLOWING PRESSURES AT LEAST ONCE A WEEK.

SIZES	FRONT COLD	FRONT HOT	REAR COLD	REAR HOT
All sizes except 16 x 5.50	26 Lbs.	29 Lbs.	30 Lbs.	33 Lbs.
16 x 5.50	32 Lbs.	35 Lbs.	32 Lbs.	35 Lbs.

IF CAR HAS BEEN STANDING FOR SOME TIME AND TIRES ARE COOL, INFLATE TO COLD PRESSURES. IF TIRES ARE WARM FROM RUNNING, INFLATE TO HOT PRESSURES.

COOLING SYSTEM

CHECK WATER LEVEL FREQUENTLY

(IN WINTER CHECK ANTI-FREEZE STRENGTH)

CAPACITY OF COOLING SYSTEMS IS AS FOLLOWS:

6 CYLINDER.....13 QTS. (10¾ I.Q.—12¼ L)
8 CYLINDER.....18 QTS. (15 I.Q.—17 L)

COPYRIGHT 1940 HUDSON MOTOR CAR COMPANY

5,000 Miles

Perform the operations listed under 1,000 and 2,000-mile lubrication in addition to the following:

When checking transmission and rear axle oil level wait until the foaming of the oil has subsided. If the car has been run for any length of time it should be allowed to stand long enough to allow the oil to reach its actual level before checking.

Transmission	S.A.E. 90 E.P. Summer	2 pints or 1lbs.--with Overdrive 3-1/4 pints
	S.A.E. 80 E.P. Winter	or 1lbs.
Rear Axle	S.A.E. 90 E.P. Summer and Winter	2-3/4 lbs.
Clutch	Hudsonite	1/3 pint
Rear Brake Cables	Viscous Chassis Lubricant	Coat cables
Distributor--6 cylinder	High Temperature Grease	Fill cup
Oil Filter		Replace cartridge

10,000 Miles

Perform the operations listed under 1,000, 2,000 and 5,000-mile lubrication in addition to the following:

Front Wheel Bearings	Milled Sodium Soap Base Lubricant	4 ounces per wheel
Rear Wheel Bearings	Milled Sodium Soap Base Lubricant	1-1/2 ounces per wheel
Spring Covers	Viscous Chassis Lubricant	Rear only
Automatic Clutch Control Cyl. (Optional)	Hudson Shock Absorber Fluid	1 ounce

20,000 Miles

Perform the operations listed under 1,000, 2,000, 5,000 and 10,000-mile lubrication in addition to the following:

Universal Joint Bearings	Viscous Chassis Lubricant	2--repack

OIL DILUTION. A small amount of sulphur is present in nearly all of the gasolines used today and this sulphur of itself is harmless but when it is burned there are certain gases formed that may leak past the pistons and rings and, if there is water in the crankcase, (usually formed by condensation) these gases form a chemical reaction with the water and a very corrosive acid is the result.

The more sulphur there is in the fuel the greater the danger of disastrous acid corrosion to the very vital parts of the engine.

The water that is formed by condensation in the crankcase is caused by the water vapor in the crankcase being condensed on the cold internal walls of the case. As long as the gases and the internal walls of the crankcase are hot enough to keep the water vapor from condensing, no harm will result but when the engine is run in low temperatures, moisture will gather and unite with the gases and the resulting acid will cause etching and pitting. Piston pins, camshaft bearings, in fact all moving parts of the engine will show excessively rapid wear.

Owners often blame the car manufacturer or the lubricating oil when the real difficulty lies in the character of the fuel used or excessive blowby in the engine or an improper carburetor adjustment.

CRANKCASE DILUTION. Oil in the crankcase is sometimes thinned due to gasoline leaking by the pistons and rings and mixing with the oil.

This gasoline leakage by the pistons and rings usually occurs during the "warming up" period when the fuel is not thoroughly vaporized and burned.

The Hudson engine is equipped with automatic devices that are designed to make the possibility of dilution as small as possible.

In order to assist the engine to warm up as quickly as possible the water temperature is controlled by a thermostat which prevents complete water circulation for cooling until a pre-determined temperature has been reached.

An automatic choke heat box in the exhaust manifold directs a stream of hot air through the thermostatic control unit on the carburetor and thence to the intake manifold. During the warming up period this use of heated air is especially valuable because the heated air from the exhaust manifold choke heat box does not open the choker valve (operated by the thermostat in the thermostatic control but passes thru the thermostatic control to the intake manifold) thereby greatly aiding the proper vaporization of the fuel.

The down-draft carburetor with this thermostatic control of the choker valve and air heated by the exhaust manifold gives easy starting and a minimum use of the choke which reduces the danger of raw or unvaporized fuel entering the combustion chamber and getting into the oil reservoir.

The Hudson Duo Flo oiling system is of great assistance in reducing oil dilution because the oil is agitated into such fine particles that any fuel dissolved in it becomes vaporized and is passed out of the crankcase by means of the crankcase ventilating system.

The crankcase ventilating system aids in the prevention of harmful dilution of the engine oil by water and fuel under any normal operating conditions. The crankshaft acts as a blower to force the vapors of fuel and water from the crankcase thru the breather tubes on the valve tappet chamber.

LUBRICATION of the automobile of today is far more important than it ever has been and is becoming increasingly important as new models are introduced that travel at higher speeds and are driven on longer trips. Oils and greases have been improved and are made to perform specific purposes.

It is recommended that you take advantage of the experience and knowledge of the HUDSON Engineers and request the tests and specifications given below:

ENGINE OIL recommendations are given on the chart Fig. 2 and are of the greatest importance. It is impossible to forecast the climatic changes so it is suggested that the following facts be considered when using this chart.

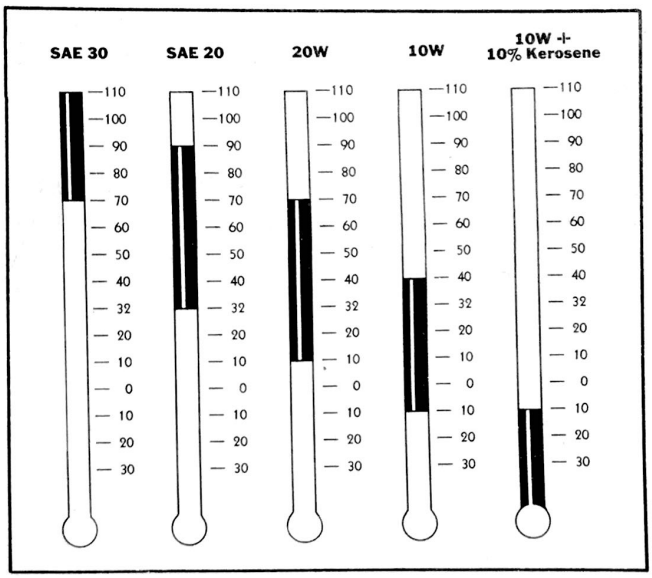

Figure 2--Engine Oil Recommendations

Select the lowest temperature that is probable before the next oil change.

Consider the speeds at which the car will be driven.

Use the oil whose viscosity best meets the conditions.

NOTE - Engine oil is drained from the crankcase of all cars shipped in freight cars. A red instruction tag attached to a knob on the instrument panel gives this information.

Oil companies have adopted the S.A.E. viscosity number system which classifies lubricants in terms of viscosity or fluidity. The oils with the lower numbers are lighter and flow more readily than do the oils with higher numbers. The S.A.E. number refers only to the viscosity of the oil and has no reference to any other characteristic or properties.

S.A.E. oil viscosities recommended are as follows:
Temperature averaging 90° F .. S.A.E. 30
Temp. of min. of 32° F.--plus S.A.E. 20
Temp. of min. of 10° F.--plus ..... 20 W
Temp. of min. of 10° F.--minus .... 10 W
Temperature of below 10° F. 10 W plus 10% kerosene.

The oil selection should be made on the basis of the minimum temperature which may be encountered before the next oil change.

SPECIAL BREAK-IN OILS or lubricants containing graphite or oil concentrates either in the crankcase or gasoline are not necessary during the breaking-in period.

A light viscosity oil was put in the engine when the car was shipped from the factory and need not be removed until the first 500 miles of driving has been completed.

LUBRICATION AFTER FIRST 500 MILES. At the end of the first 500 miles the crankcase oil should be drained, preferably while the oil is hot, and refilled to the proper level with the recommended proper viscosity oil. The oil should be changed every 2,000 miles thereafter, unless conditions in the locality make it advisable to change more frequently. Dusty roads, severe changes in temperature; long trips at high speeds (particularly in hot weather) will make it advisable to change oil more often than every 2,000 miles.

During the winter months the selection of crankcase oil should be based on easy starting qualities. The highest grade engine oils are good lubricants at all engine temperatures, however, high speed driving or in hot weather, the amount of oil consumed may be somewhat less if heavier oils are used.

Driving over dusty roads or thru dust storms will introduce abrasive grit into the engine. The Air Cleaner will decrease the amount of dust that may enter the crankcase, however, if there is any doubt in your mind regarding the necessity of draining the oil to get the dust grit out, drain the oil--It is better to be safe than sorry.

ENGINE OIL CAPACITY

6 Cylinder	
Crankcase capacity	5-1/2 qts.
	4-1/2 imperial qts.
	5-1/4 liters
To refill after draining add	4-1/2 qts.
	3-3/4 imperial qts.
	4-1/4 liters
8 Cylinder	
Crankcase capacity	9 qts.
	7-1/2 imperial qts.
	8-1/2 liters
To refill after draining add	7 qts.
	5-3/4 imperial qts.
	6-1/2 liters

OIL PAN TRAY is constantly supplied fresh oil from the main oil pan reservoir yet when the crankcase is drained the oil remains in the oil pan tray which assures instant lubrication when the engine is started.

There is no wait for oil to circulate.

OIL LEVEL GAUGE is of the bayonet type attached to the oil filler cap. When the bayonet gauge is in place the bottom is in line with the bottom of the suction line. The top mark on the gauge is the normal level of oil with the recommended quantity. The middle mark (bottom of oil level range) is the level when two quarts less than the capacity is in the reservoir. When the oil level reaches this point, oil should be replaced or two quarts added to bring the level up to the top line.

Cleaning oil pan and screen is recommended at 10,000 mile intervals or any other times that it is removed for internal operations.

All of the engine oil passes thru the oil pan and screen before reaching the oil pump. Foreign matter that may be in the oil is both screened out and permitted to settle out at this point so that the oil reaching the pump is quite free from grit particles.

The importance of this operation increases in dusty territories.

WATER PUMP AND DRAG LINKS. Lubricate every 1,000 miles. Use an aluminum soap base grease of the following specifications and physical characteristics:

Aluminum Soap 7.50--8.50%
Mineral Oil ..... Remainder
Saybolt viscosity of oil at
100° F. ..... 400-450 second
Pour test of oil ..... 0° F. or under

Grease characteristics:

Free Fatty Acids ..... .3% maximum
Moisture ..... None
Ash 1.5%
Separating point of Grease 425° F. min.

This grease must be a smooth uniform product free from fillers and grit, it must not separate under ordinary conditions or usage and must be free from offensive odors.

DISTRIBUTOR on the 8 cyl. is lubricated with a few drops of light zero pour test motor oil in the oil cup. Turn grease cup on the 6 cyl. one turn and oil wick in top of distributor drive shaft under the rotor. Place one drop of oil on contact arm stud and apply a light coating of high temperature grease on contact arm fibre block. Do not over oil, every 2,000 miles is sufficient.

TRANSMISSION AND DIFFERENTIAL. Transmission and Rear Axle--The lubricant should be drained and replaced with fresh lubricant of the correct grade at the beginning of cool weather in the fall (60° F. and below) and the beginning of warm weather in the spring.

Use a good grade of mineral oil to which there has been added not less than 15% of Extreme Pressure Base. This base may consist of combined sulphur and saponifiable oils, free from fatty acids. This lubricant must be non-corrosive and non-abrasive. A polished copper strip when immersed in the lubricant to which has been added 5% of water must not show any corrosion beyond a slight discoloration of the copper when heated to 200° F. for three hours.

The following physical characteristics should be specified to all transmission and differential lubricant suppliers--

Summer--S.A.E. 90-E.P.		Winter--S.A.E. 80-E.P.
400° F. Minimum	Flash point	350° F. Minimum
450° F. Minimum	Fire point	400° F. Minimum
+20° F. Maximum	Pour point	-10° F. Maximum
125--150 Seconds	Saybolt Viscosity at 210° F.	75--85 Seconds
Not greater than 15 times the viscosity at 210° F. ..	Saybolt Viscosity at 100° F.	Not greater than 9 times the viscosity at 210° F.
Nil	Free Sulphur	Nil
.5% Maximum	Ash	.3% Maximum
Nil	Free Acids	Nil
Nil	Water	Nil
Smooth and free from bubbles	Appearance	Smooth and free from bubbles

Capacity of transmission is 2-1/4 pints or pounds, if disassembled and parts washed.
Capacity of transmission is 2 pints or pounds, if drained and refilled.
Capacity of differential is 2-3/4 pints or pounds.
Capacity of transmission and overdrive is 3-1/2 pints or pounds if disassembled and parts washed
Capacity of transmission and overdrive is 3-1/4 pints or pounds if drained and refilled.

STEERING GEAR. Uses S.A.E. 90 E.P. and add whenever necessary. The level of the lubricant should be checked twice yearly or every 5,000 miles. There is no necessity for draining and replacing except in the event of a disassembly of the steering gear.

CLUTCH. Use only Hudsonite which is a special lubricant developed and compounded in the Hudson Engineering Laboratories. Its use insures maximum smoothness of operation and maximum life of the clutch.

Change every 5,000 miles. Refill capacity is 1/3 of a pint.

WHEEL BEARINGS. Due to the high temperatures generated at the wheel bearings under severe brake usage, the wheel bearing lubricant must not thin out at high temperatures. It should be Sodium Soap Grease, smooth, non-fibrous and uniform, free from fillers and grit and must not separate under ordinary conditions of operation. Lubricate every 10,000 miles--front wheels have a refill capacity of 3 ounces per bearing and the rear wheels 1-1/2 ounces per bearing.

WHEEL BEARING GREASE SPECIFICATIONS

Sodium Soap	19-20%
Mineral Oil	Remainder
Saybolt viscosity of oil at 210° F.	100 seconds
Pour test of oil	0° or under
Free Fatty Acids	.3% maximum
Moisture	Trace
Ash	2.00% maximum
Penetrometer (worked consistency)	280-310
Melting Point	300° F. plus

Free from offensive odors and it shall show a negative test for corrosion on the copper strip.

GENERATOR. Use a few drops of a light, zero pour test, motor oil.

HOOD LOCKS, DOOR HINGES, DOOR DOVETAILS. Use a few drops of a light, zero pour test, motor oil every 2,000 miles.

THROTTLE CONTROL RODS, LEVERS, CLEVIS PINS AND LINKAGE, BRAKE OPERATING LINKAGE. Use a light engine oil every 2,000 miles.

STEERING SPINDLES, SPRING SHACKLES, AND ALL OTHER ZERK FITTINGS. Lubricate every 1,000 miles using viscous chassis lubricant.

CHASSIS LUBRICANT SPECIFICATIONS

Calcium or Aluminum Soap .. 3-1/2--4.00%
Mineral Oil ..... Remainder
Saybolt viscosity of oil
at 100° F. ..... 400--450 seconds
Pour test of oil ..... 0° F. or under
Melting point of Grease. 160° F. Minimum

This grease must be of a rubbery texture and uniform in body. It must be free from fillers and grit and offensive odors, and must not separate under ordinary conditions of usage. It shall show a negative test for corrosion on the copper strip.

CHASSIS SPRING COVERS. Use the same lubricant as specified for Steering Spindles, Spring Shackles and all other Zerk Fittings and lubricate every 10,000 miles.

UNIVERSAL JOINTS. Lubricate spline every 1,000 miles. Repack needle bearings every 20,000 miles, using the same lubricant as specified for steering spindles, spring shackles, and all other Zerk fittings.

REFERENCES

SOURCE OF INFORMATION	DATE	SUBJECT

ENGINE TUNE-UP

ENGINE TUNE-UP can be either a major tune-up with a complete carburetor adjustment or a minor tune-up which does not require a complete electrical and fuel check.

A complete engine tune-up every 5,000 miles will maintain the best engine performance and give the utmost in gasoline economy.

Minor engine tune-up is the best insurance against failures in the electrical and fuel systems.

MINOR TUNE-UP

MINOR TUNE-UP. There are many cases when an adjustment of ignition or carburetion for idling is all that is necessary to return the engine to proper performance.

CLEAN SPARK PLUGS and adjust the gaps to .032".

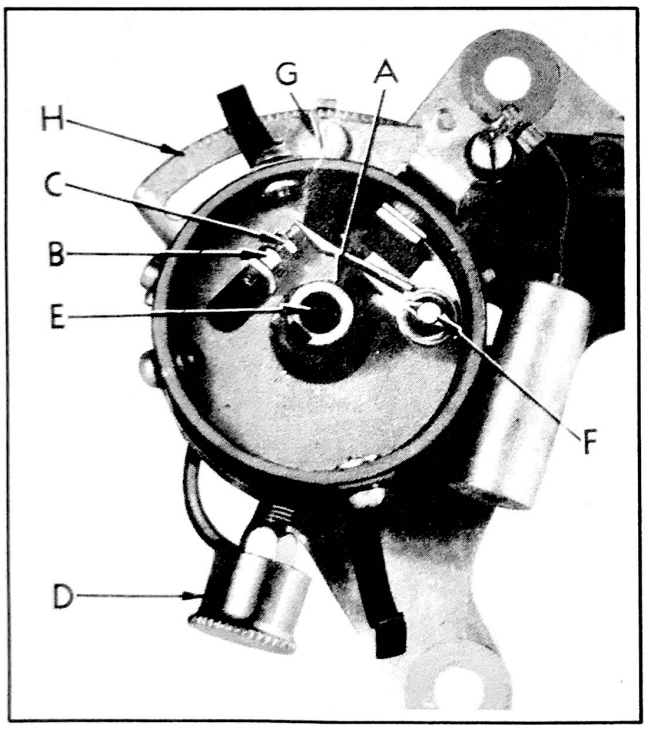

Figure 3
Breaker Point Adjustment - 6 Cylinder

CLEAN OR HONE DISTRIBUTOR POINTS and adjust to .020" clearance on 6 cyl. engines and .017" clearance on 8 cyl. engines. To adjust the gap turn the engine over until the fibre block (A) of the contact arm, Fig. 3 for 6 cyl., Fig. 4 for 8 cyl., is on the highest point of the cam. Points should be clean and smooth and make full contact. Loosen lock nut (B) and turn the adjusting screw (C) until the proper gap is obtained. After tightening the lock nut, recheck the gap.

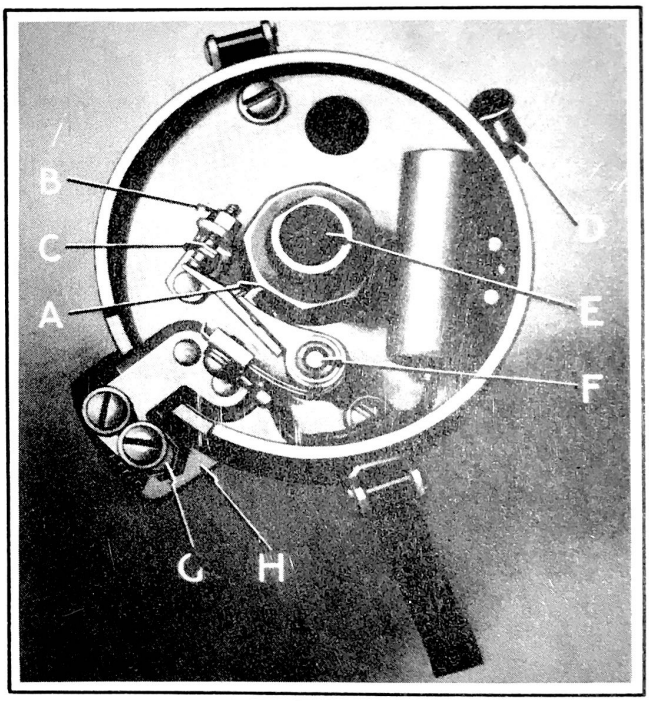

Figure 4
Breaker Point Adjustment - 8 Cylinder

CHECK THE BATTERY AND IGNITION WIRING CONNECTIONS. Make certain all high tension wires are pressed down securely into their sockets. No corrosion should be present and the insulation must be in good condition.

ADJUST THE IGNITION TIMING by removing the spark plug from No. 1 (front) cylinder. Place a finger over the spark plug hole and turn over the engine by pressing the small button on the rear end of the starter solenoid, in quick suces-

sive movements. When the air pressure against the finger indicates that the piston is coming up on the compression stroke then continue the engine cranking slowly until the breaker points just begin to open and the mark U.D.C. 1-6 (6 cyl.) is 1/2 inch ahead or U.D.C. 1-8 (8 cyl.) on the front face of the flywheel is in line with the pointer on the rear engine support plate.

SET IGNITION TIMING ON 6 CYL. ENGINES. The distributor is driven counterclockwise. Loosen the distributor advance diaphragm arm screw (G) Fig. 3 and rotate the distributor housing counterclockwise to the limit of the slot in the quadrant (H). Remove the central cable from distributor cap and place the bare end 1/8" from the cylinder head. With the ignition turned on and the U.D.C. 1-6 mark on the flywheel 1/2" ahead of the pointer on the inspection hole rotate the distributor body clockwise slowly, to and not beyond that point where a spark jumps from the high tension wire to the cylinder head. Tighten screw (G) and replace the central cable in the distributor cap and clamp the cap on the distributor. When the distributor cap is in place, the metal strip on the rotor arm should be directly in line with the terminal to which number one spark plug is attached. The other cables should be in the cap terminals in the order 1-5-3-6-2-4 following in a counterclockwise direction. The cable in the center terminal of the distributor cap should go to the central (high tension) terminal of the ignition coil.

SETTING IGNITION TIMING ON 8 CYLINDER ENGINES. The distributor is driven clockwise. Loosen the distributor clamp screw (G) Fig. 4 and rotate the distributor housing clockwise to the limit of the slot in the clamping plate (H). Remove the center cable from the distributor cap and place the bare end 1/8" from the intake manifold. With the ignition "on" and the U.D.C. 1-8 mark in line with the pointer on the inspection hole, rotate the distributor body counterclockwise slowly, to and not beyond that point where a spark jumps from the high tension wire to the manifold. Tighten the clamp screw (G) and replace the central cable in the distributor cap and clamp the cap on the distributor. When the distributor cap is in place, the metal strip on the rotor arm should be directly in line with the terminal to which number one spark plug is attached. The other cables should be in the cap terminals in the order named, 1-6-2-5-8-3-7-4, following in a clockwise direction. The cable in the center terminal of the distributor cap should go to the center (high tension) terminal of the ignition coil.

DISTRIBUTOR LUBRICATION. The grease cup (D) on 6 cyl. distributors should be filled and turned one complete turn. Use a high temperature grease. A few drops of light engine oil should be applied to the wick (E) in the top of the distributor drive shaft under the rotor. Apply one drop of light engine oil on the contact arm stud (F) and apply a light coating of high temperature grease on the cam lobe (A). Do not over lubricate.

The 8 cyl. distributor requires a few drops of light engine oil in the oil cup (D) Fig. 4 and a few drops of light engine oil on the wick (E) in the distributor drive shaft under the rotor, a drop of oil on the contact arm stud (F) and a light coating of high temperature grease on the cam lobe (A). Do not over lubricate.

Start the engine and allow it to warm up to a normal operating temperature.

On Models 10 and 18 using the single type carburetor, turn clockwise the idling screw (A) Fig. 5, into its seat and then out (counterclockwise) exactly one turn. Readjust for smooth idling. The final adjustment should be from 1/2 to 1 1/2 turns of the screw from its full "in" position. The throttle adjusting screw (B) should be set for a car speed of 7 1/2 to 8 M.P.H. in high gear.

On Models 11, 12, 14, 15, 17 using a duplex type of carburetor, turn (clock-

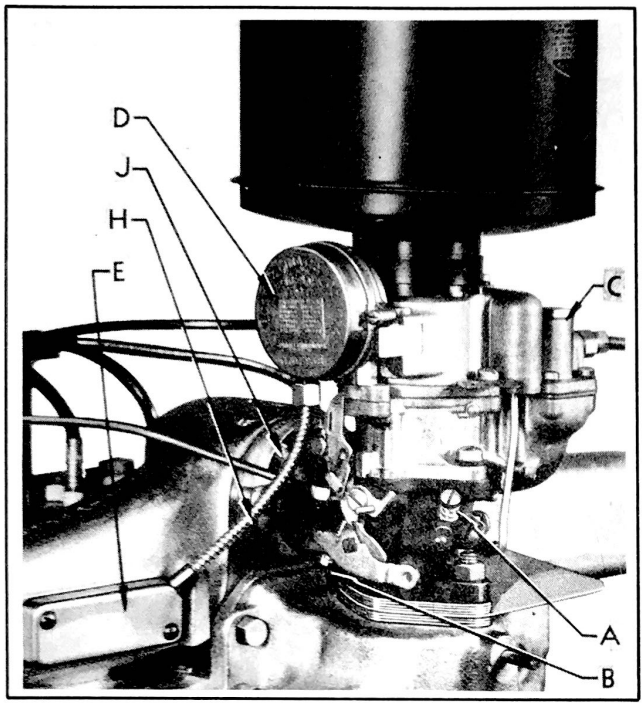

Figure 5 - Idling Adjustment
Model 10, 18 Single Carburetor

wise) both idling adjusting screws (A, Fig. 6) into their seats alternately and back out (counterclockwise) exactly 3/4 of a turn. Readjust for smooth idling. The final adjustment of the two idling screws should be from 1/4 to 1 turn out of their full "in" position.

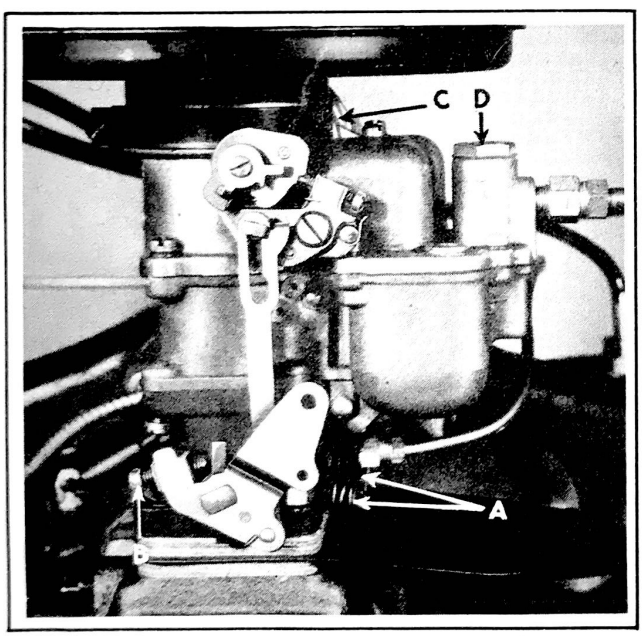

Figure 6 Idling Adjustment
Models 11, 12, 14, 15, 17
Carburetor Without Dashpot

Adjust the throttle stop screw (B, Fig. 5) on the single carburetor and screw (B, Fig. 6) on the duplex carburetor so that the engine idles at a car speed of 7 1/2 to 8 miles per hour in high gear when the car is equipped with 4-1/9 to 1 axle or 6-1/2 to 7 M.P.H. with 4 5/9 to 1 axle and 6 to 6 1/2 M.P.H. with a 4 7/8 to 1 axle. This is equivalent to 600 R.P.M.

MAJOR TUNE-UP

An engine diagnosis or over-all check is necessary before starting the Major Tune-Up. This preliminary check of the engine and ignition will determine the weak points and give definite information as to where to start a Major Tune-Up.

The instruments necessary for an Engine Over-all check are an accurate Ammeter and Voltmeter; Ignition High Tension Tester and a Vacuum Gauge. The instruments are shown properly connected in Fig. 7.

VACUUM GAUGE is attached to the windshield cleaner manifold connection. Warm up the engine to a normal operating temperature and note the reading on the Vacuum Gauge. It should read between 18 and 21 inches with the engine idling.

If any of the following conditions occur, the cause and remedy are given.

LOW AND UNEVEN READING means poor compression or ignition. To determine the point or points causing the lack of compression or faulty ignition, make the Tests 1-2-3-4-9-10-11-12-13 under Major Tune-Up Procedure.

VACUUM GAUGE HAND JERKY IN ACTION indicates sticky or burned valve or the valve tappet adjustment is too close. Make Test 4 under Major Tune-Up Procedure.

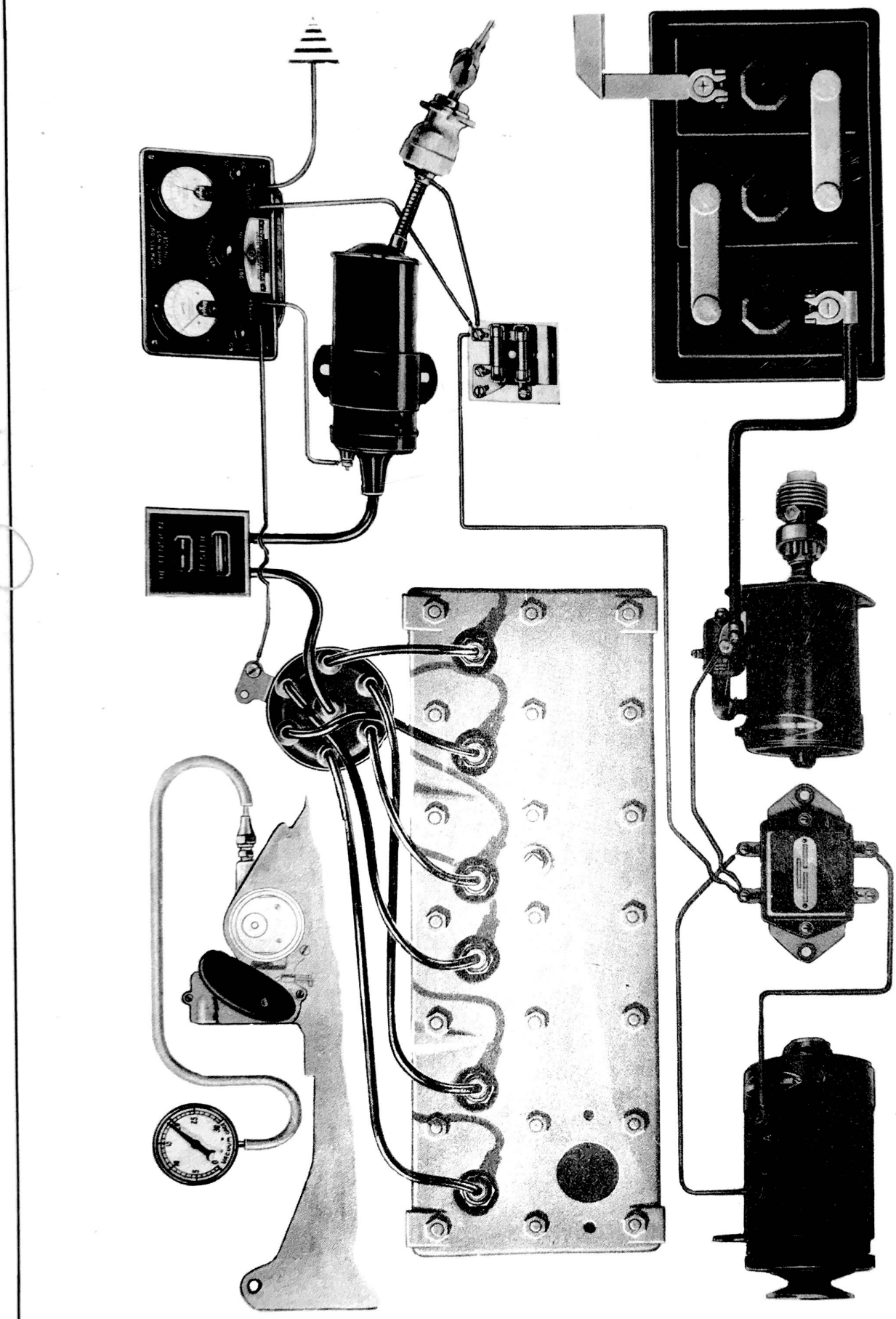

Figure 7 - Engine Overall Check

VACUUM GAUGE HAND VIBRATES MORE AT HIGH SPEED THAN AT IDLE indicates weak valve springs. See "Engine Section" for specifications and test.

VACUUM GAUGE HAND STEADY BUT LOW INDICATES LATE IGNITION TIMING. Make Test 11 under Major Tune-Up Procedure.

VACUUM GAUGE HAND HAS FLOATING MOTION indicating a rich carburetor mixture. Make Tests 20-21-22 under Major Tune-Up Procedure for idle screw adjustment; float level and float valve position.

VACUUM GAUGE HAND VIBRATES CONSTANTLY indicating too early ignition. Make Test 11 under Major Tune-Up Procedure.

VOLTMETER AND HYDROMETER CHECK OF BATTERY. The battery gravity must be checked first with a hydrometer, then connect the voltmeter with its positive lead to the positive battery terminal and its negative lead to the negative battery terminal and check the battery voltage. The battery gravity should be not less than 1250 at 70 degrees F. and the voltage not less than 6 Volts and if it is less remove battery and recharge it.

VOLTMETER CHECK OF DROP IN VOLTAGE. Connect the negative voltmeter lead to the "B" terminal of the fuse block. Connect the positive voltmeter lead to the ground. The drop in voltage should not be more than two tenths of a volt when the headlights are turned on. If the drop in voltage is greater than two tenths of a volt make Tests 6-7-8 under Major Tune-Up Procedure.

VOLTMETER CHECK OF STARTER SYSTEM. Connect the positive lead of the voltmeter to the starting motor frame and the negative lead to the starting motor terminal post. Check with the engine warm also cranking and the ignition "Off". The voltage should be 5 volts and if 4-1/2 volts or less make Tests 6-7-8 under Major Tune-Up Procedure. The battery must be known to be in good condition.

VACUUM ADVANCE. With engine running check the distributor vacuum advance by increasing and decreasing the engine speed. The distributor should rotate freely.

VOLTMETER CHECK OF DISTRIBUTOR GROUND. Make the check as given in Test 9, paragraphs 1 to 6 inclusive, under Major Tune-Up Procedure. This check should show a voltage reading on the voltmeter connected from distributor to engine ground, of not more than one tenth volt. The ignition must be "ON" and the distributor points closed. If a voltmeter reading is higher than a tenth volt it indicates poor breaker points.

VOLTMETER CHECK OF DISTRIBUTOR CONDENSER is given in detail in Test 9, paragraphs 6 to 10 inclusive, under Major Tune-Up Procedure. This check should show a voltage reading on the voltmeter connected from distributor terminal to ground of exactly the same as the battery voltage. If the reading is lower than the battery voltage it indicates that the condenser is leaky or grounded.

HIGH TENSION TESTER CHECK OF HIGH TENSION CABLES is given in detail in Test 12 of Major Tune-Up Procedure and if this check should show an irregular spark in the tester it indicates poor high tension wires; cracked distributor cap or the rotor is shorted.

HIGH TENSION TESTER CHECK OF IGNITION COIL AND CABLE is given in detail in Test 13 of Major Tune-Up Procedure and if this check shows an irregular spark in the High Tension Tester with the high tension test gap opened to 7 M.M. it indicates a poor coil or coil cable.

VOLTMETER WITH AMMETER CHECK OF GENERATOR CHARGING RATE. If the battery is not receiving an adequate "charge" and runs down then make the check in Test 14 and also 15 of Major Tune-Up Procedure.

VOLTMETER WITH AMMETER CHECK OF VOLTAGE REGULATOR. If the battery runs down then make the check in Test 15 and also 14 of Major Tune-Up Procedure.

MAJOR TUNE-UP PROCEDURE

VACUUM GAUGE - Test 1

1. With engine at normal operating temperature attach vacuum gauge hose to windshield cleaner manifold connection.

2. Idle engine at 600 R.P.M. which is equivalent to 7-1/2 to 8 miles per hour in high gear when the car is equipped with 4 1/9 to 1 axle or 6 1/2 to 7 M.P.H. with 4 5/9 to 1 axle and 6 to 6 1/2 M.P.H. with 4 7/8 to 1 axle. The Gauge reading should be between 18 and 21 inches and hold steady or have a very slight flutter for an efficient idle speed.

3. If gauge reading is not steady between 18 and 21 inches it indicates carburetor idling adjustment may not be correct; some spark plugs are not firing; valves are sticking; valve seats are burned; valves are adjusted too tight; intake manifold leaks; distributor timing incorrect; or valve timing incorrect and a complete engine tune-up is in order to correct the difficulty.

COMPRESSION GAUGE - Test 2 - Fig. 8

1. With engine warm remove all spark plugs. Open carburetor throttle.

2. Insert compression gauge in No. 1 spark plug hole and hold tightly. Crank engine with starting motor until gauge reaches highest reading.

3. Record reading and repeat on balance of cylinders. Minimum reading should not be lower than 90 pounds - with maximum allowable variation of 10 pounds.

4. Low readings may indicate sticking valves, burned valve seats, worn pistons or rings.

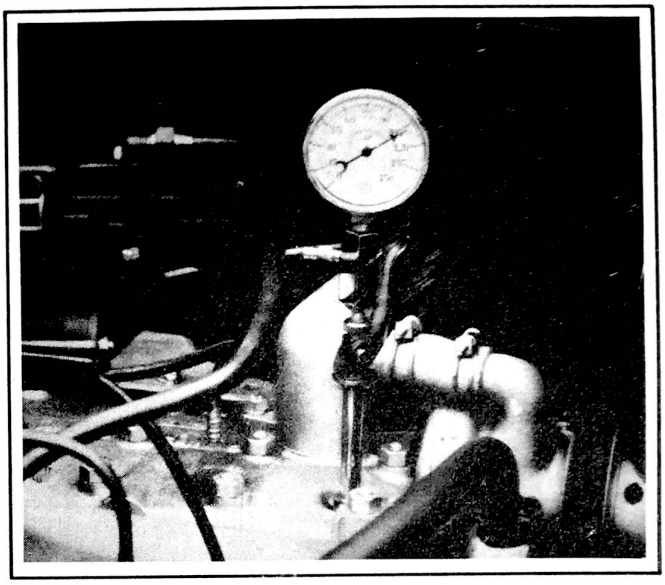

Figure 8 - Compression Test

SPARK PLUGS - Test 3 - Fig. 9

1. Inspect spark plugs to be sure they conform to factory specifications.

2. Clean, regap to .032" and test. Plugs should fire under 75 lbs. pressure in tester.

3. Replace plugs with burned electrodes, chipped or cracked porcelain or

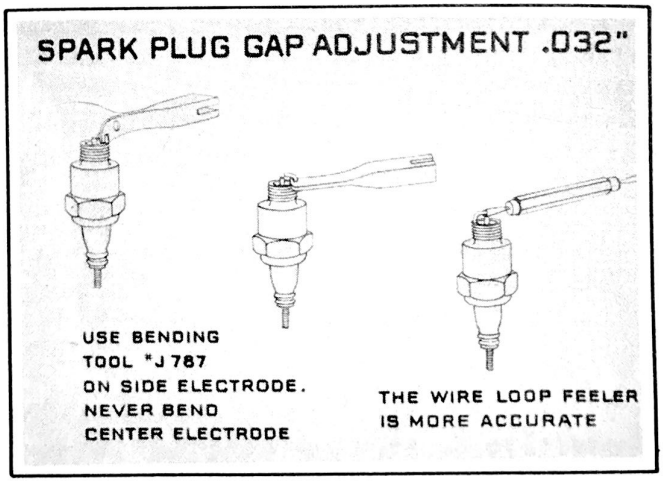

Figure 9 - Spark Plug Test

if they have been in service over 10,000 miles.

4. Always use new spark plug gaskets. Spark plugs should be tightened with a torsion wrench to 28 foot pounds.

VALVES AND TAPPETS - Test 4 - Fig. 10

1. Check valve tappet clearance with engine hot and running.

Intake tappet clearance .006"
Exhaust tappet clearance .008"

2. Inject oil having gum dissolving properties into intake manifold with engine running above idle speed to remove deposits from valve guides. Recheck compression.

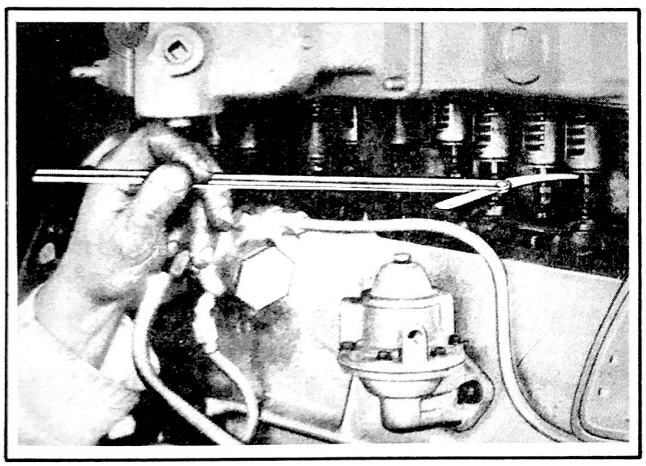

Figure 10 - Valve Tappet Adjustment

3. If compression is still low, grind valves, replacing guides and valves if worn. Replace cylinder head gasket. Valve heads are not slotted and the pneumatic valve grinder KMO219 should be used.

BATTERY CAPACITY - Test 5 - Fig. 11

1. Take hydrometer gravity reading. Gravity should be 1250 to 1290 at 70° F.

2. Connect positive voltmeter lead to positive battery terminal - negative voltmeter lead to negative battery terminal.

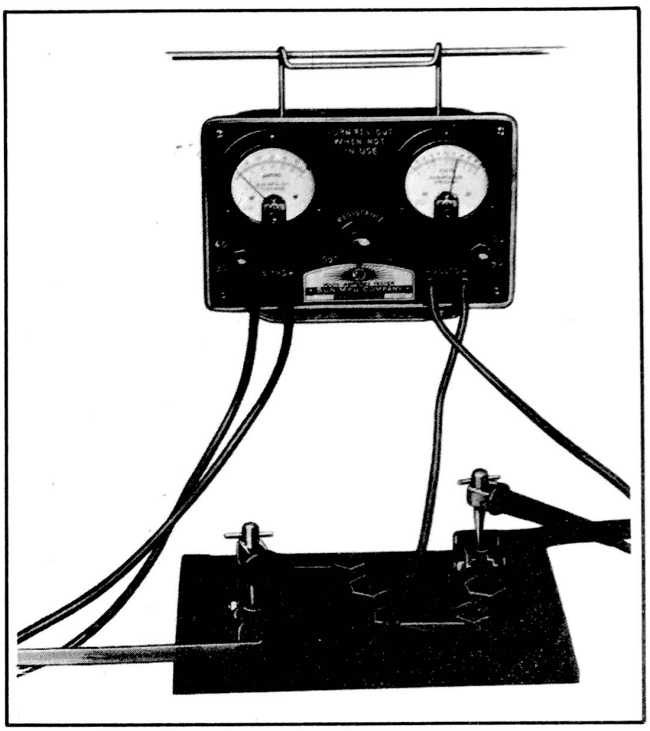

Figure 11 - Battery Capacity Test

3. Without current draw, voltmeter reading should be 6 to 6 1/2 volts.

4. If gravity or voltage is low recharge battery.

BATTERY VOLTAGE DROP - Test 6 - Fig. 12

(STARTER SYSTEM)

1. Connect positive voltmeter lead to positive battery terminal - negative voltmeter lead to negative battery terminal (solid line). Ignition "off", crank engine by pressing starting motor solenoid button and read voltage.

2. Connect positive voltmeter lead to ground on engine - negative voltmeter lead to starting motor switch "BAT" terminal (broken line). Ignition "off", crank engine by pressing starting motor solenoid button and read voltage.

3. Difference between first and second readings should not be greater than .25 volt. If greater than this, make test 7.

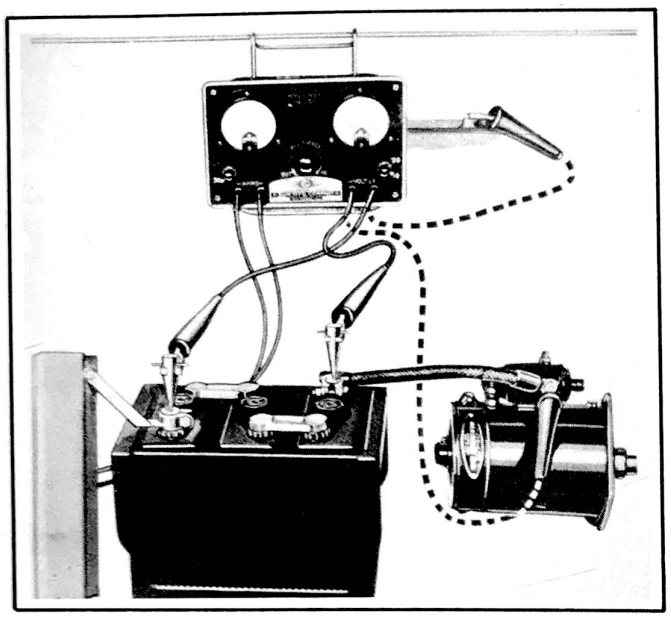

Figure 12
Battery Voltage Drop-Starter System

4. Check and tighten screws at "B" terminals of fuse block, voltage regulator and "BAT" terminal of starting motor switch.

BATTERY CABLE AND CABLE CONNECTIONS - Test 7 - Fig. 13

1. Connect positive voltmeter lead to positive battery terminal - negative voltmeter lead to ground on engine.

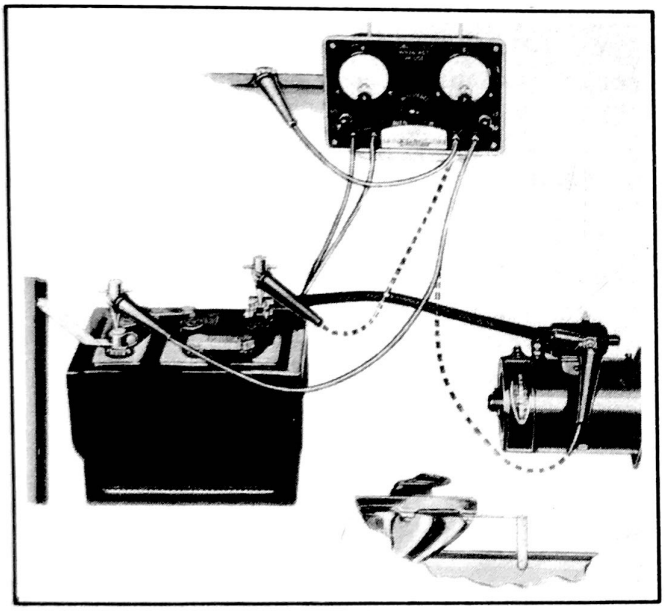

Figure 13
Battery Cable and Cable Connection Test

2. With engine cranking, voltage reading should not be more than .1 volt. If higher than this, check positive battery cable connection at battery terminal, ground strap tightness and engine to frame ground connections.

3. Connect positive voltmeter lead to "BAT" terminal of starting motor switch - negative voltmeter lead to negative battery terminal.

4. With engine cranking, voltage reading should not be higher than .1 volt. If higher than this, check negative battery cable connection at battery terminal and cable connection at "BAT" terminal of starting motor switch.

5. If cranking speed is slow it indicates starting motor switch trouble. Make test 8.

STARTING MOTOR SWITCH - Test 8 - Fig. 14

1. Connect positive voltmeter lead to starting motor terminal of solenoid switch - negative voltmeter lead to "BAT" terminal of solenoid switch.

2. Crank engine with starter. Voltmeter reading should not be more than .2 volt. If more than this check connections or replace switch.

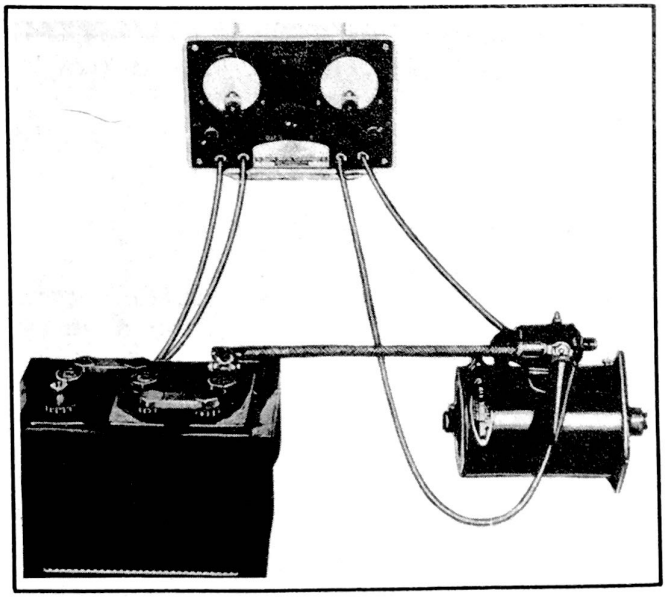

Figure 14 - Starter Switch

DISTRIBUTOR GROUND - Test 9 - Fig. 15

1. Connect positive voltmeter lead to ground on engine - negative voltmeter lead to terminal of distributor.

2. Remove distributor cap.

3. Turn distributor shaft until breaker points are closed.

4. Turn ignition switch on.

5. Voltmeter reading should not be more than 1/10 volt.

6. A reading of more than 1/10 volt indicates poor breaker point contact, poor distributor point plate contact or poor distributor housing contact to engine.

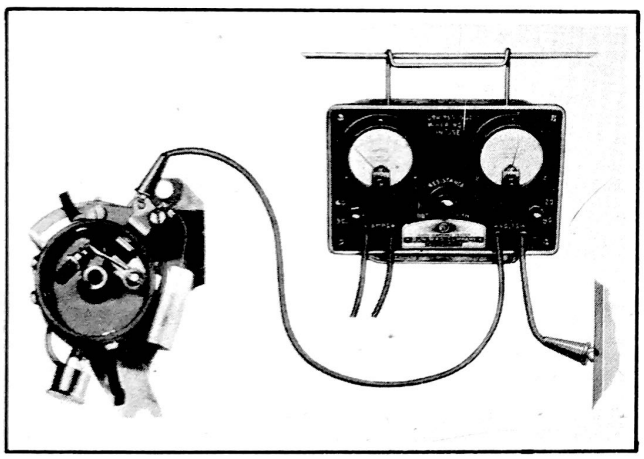

Figure 15 - Distributor Ground Test

7. Turn distributor shaft until points are open.

8. Turn ignition switch on.

9. Voltage between distributor terminal and ground should be exactly same as battery voltage.

10. If lower, condenser is leaky or grounded.

DISTRIBUTOR - Test 10 - Fig. 16

1. Oil wick at top of shaft.

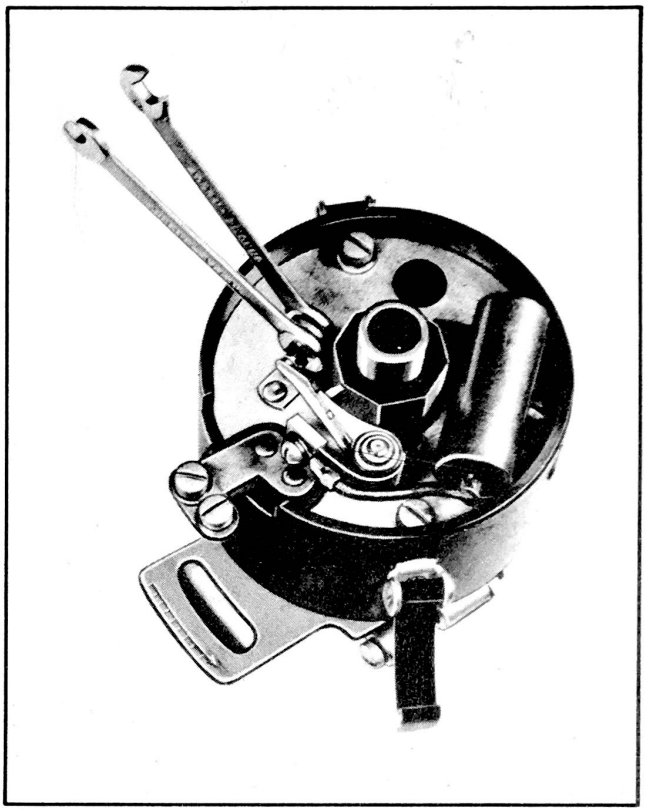

Figure 16 - Distributor Test

2. On six cylinder distributors turn grease cup one turn - on eight cylinder models fill oil cup.

3. Coat breaker arm block lightly with high temperature grease.

4. Place one drop of engine oil on breaker arm pivot.

5. Check automatic advance - governors must work freely.

6. On 6 cylinder models check vacuum advance. Distributor must rotate freely.

7. Clean breaker points - replace if burned or pitted.

8. Align points.

9. Check breaker arm spring tension - should be 18 to 20 ounces.

10. Adjust breaker points gap - six cylinder models .020" - eight cylinder models .017".

DISTRIBUTOR TIMING - Test 11 - Fig. 17

1. Attach synchroscope ground lead to engine - attach remaining lead to No. 1 spark plug.

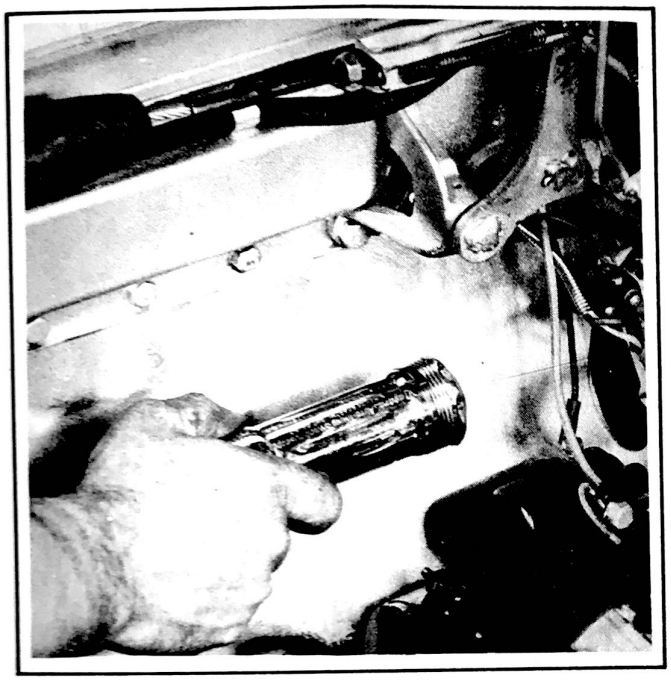

Figure 17 - Distributor Timing Test

2. Run engine at idle speed, 600 R.P.M. and if ignition timing is correct, the dead center mark on 6 cylinder models will show 1/2 inch ahead of the pointer on rear engine support plate. On 8 cylinder models the dead center mark will be directly opposite the pointer. Idle speed is 600 R.P.M. which is equivalent to 7-1/2 to 8 miles per hour in high gear when the car is equipped with 4-1/9 to 1 axle or 6-1/2 to 7 M.P.H. with 4-5/9 to 1 axle and 6 to 6-1/2 M.P.H. with 4-7/8 to 1 axle.

3. If timing is not correct rotate distributor body on six cylinder distributor clockwise to advance and counterclockwise to retard. On eight cylinder rotate distributor counterclockwise to advance and clockwise to retard.

4. As engine speed is increased note movement of advance on flywheel. Mark on flywheel should move up as engine speed is increased and return to normal position for idle speed.

FUEL AND ALTITUDE COMPENSATION. The procedure outlined in the foregoing paragraphs gives approximately normal timing for regular or non-premium fuels at or near sea level.

When Ethyl or premium fuels which have octane rating of 80 or higher as contrasted to regular brands of approximately 72 octane rating are used, a more advanced spark timing setting should be used and final tests should be made on the road. When operating at high altitudes it will be found that a more advanced spark timing setting can be used than at or near seal level.

To determine proper spark timing for these conditions, with engine at normal operating temperature, accelerate with full throttle from 8 m.p.h. in high gear. A ping should be noted at 10 to 15 m.p.h.

If no "ping" is heard, loosen the advance diaphragm screw (G), Fig. 3, on 6 cylinder models and rotate distributor body in a clockwise rotation one graduation mark at a time until the "ping" is heard. On 8 cylinder models, loosen clamp screw (G), Fig. 4, and rotate distributor body counterclockwise one graduation mark at a time until "ping" is heard. Under no circumstances, however, should the pointer on the rear engine support be more than 1 inch before the U.D.C. 1/6 / mark on 6 cylinder flywheels and 3/4 inch before the U.D.C. 1-8 / mark on 8 cylinder flywheels.

If the "pinging" is heard at speeds above those previously mentioned, retard the spark timing by loosening the clamp screw and rotate distributor body in opposite direction, one graduation mark at a time until the proper setting is obtained.

THE VOLTAGE REGULATOR, which is standard equipment on all models, is mounted under a plate on the left side of the dash in the engine compartment.

This highly sensitive device automatically increases the amount of current flowing into the battery when the battery is low due to heavy electrical loads and reduces the output when the battery voltage reaches a pre-determined value.

As special equipment is necessary to test this unit and as the cover is sealed in place, the unit should never be tampered with.

HIGH TENSION CABLE - Test 12 - Fig. 18.

1. Connect tester to No. 1 spark plug cable and ground. Run engine at idle and set tester at 7 M.M. Idle speed is 600 R.P.M. which is equivalent to 7-1/2 to 8 miles per hour in high gear when the car is equipped with 4-1/9 to 1 axle or 6-1/2 to 7 M.P.H. with 4-5/9 to 1 axle and 6 to 6-1/2 M.P.H. with 4-7/8 to 1 axle.

2. If spark is weak or irregular connect tester to No. 1 socket of distributor. An irregular spark across 7 M.M. gap indicates poor No. 1 cable. Repeat test on all plug wires.

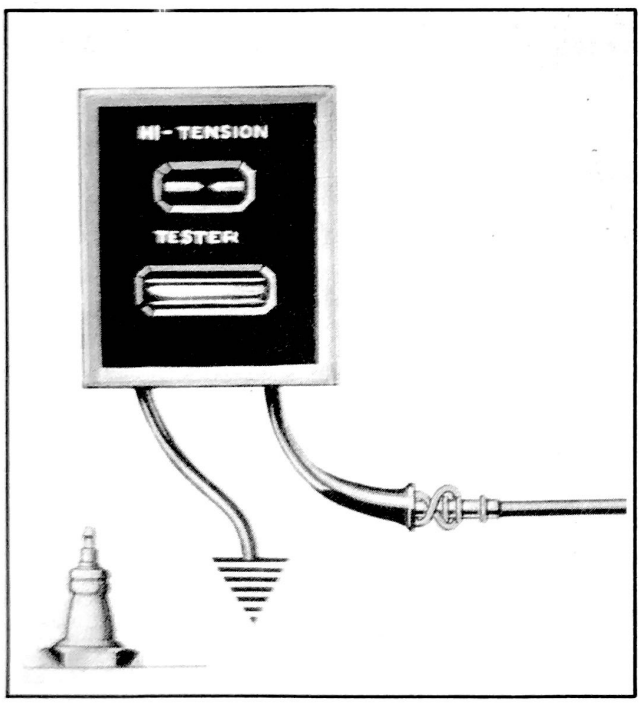

Figure 18 - High Tension Cable Test

3. If irregular spark is obtained on some but not all tests, check distributor cap for crack or burned sectors.

4. If regular spark is not obtained on any tests, check rotor for short to shaft and wide gap.

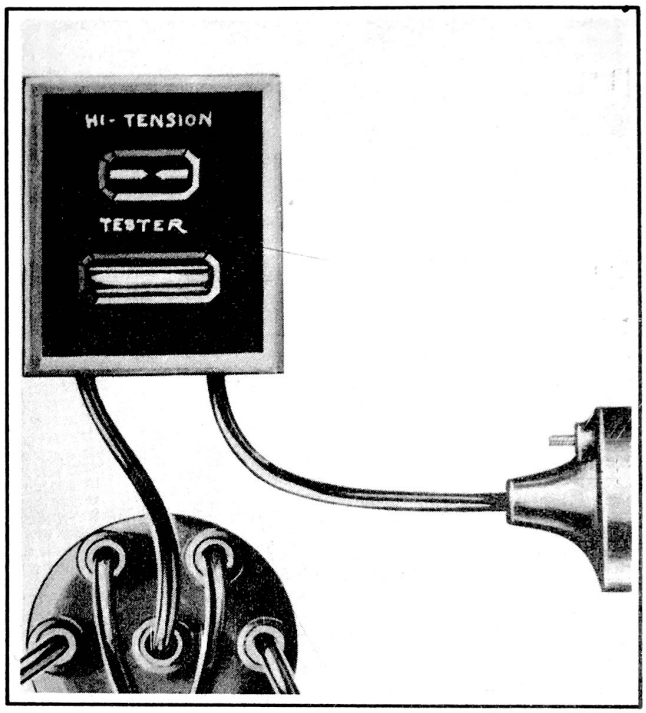

Figure 19 - Ignition Coil Test

IGNITION COIL - Test 13 - Fig. 19.

1. If regular spark is not obtained in test 12, remove cable from distributor central terminal and connect tester to cable and distributor. Close tester gap and run engine at idle speed. Idle speed is 600 R.P.M. which is equivalent to 7-1/2 to 8 miles per hour in high gear when the car is equipped with 4-1/9 to 1 axle or 6-1/2 to 7 M.P.H. with 4-5/9 to 1 axle and 6 to 6-1/2 M.P.H. with 4-7/8 to 1 axle. Open gap to 7 M.M. and note spark.

2. Remove cable from coil and connect tester direct to coil and distributor. Repeat test. If spark is more regular than before, install new cable.

3. If regular spark is not obtained with 7 M.M. gap, replace coil.

GENERATOR CHARGING RATE - Test 14 - Fig. 20.

1. Disconnect "BAT" lead at "B" Terminal on voltage regulator.

2. Connect positive ammeter lead to terminal of wire just disconnected - negative ammeter lead to "B" terminal on regulator.

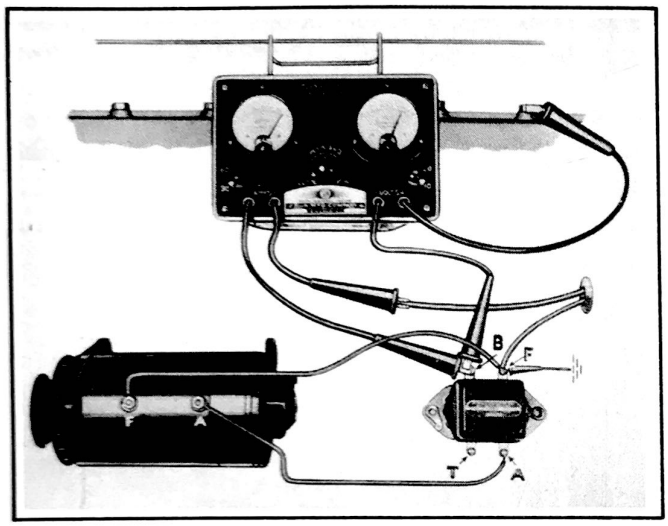

Figure 20 - Generator Charging Rate

3. Connect negative voltmeter lead to "B" terminal on regulator - positive voltmeter lead to ground on engine.

4. Connect jumper wire to "F" terminal on regulator and ground on engine.

5. Run engine at speed corresponding to 20 M.P.H. for 15 minutes to warm up.

6. With resistance turned "out" and engine running at speed corresponding to 35 M.P.H., at 8 volts, generator charging rate should be not less than 27 amperes on models 10 and 18. On all other models charging rate should be not less than 34 amperes. Adjust third brush in a counter-clockwise rotation to increase output.

VOLTAGE REGULATOR TEST - Test 15 - Fig. 21.

1. Disconnect "BAT" lead at "B" terminal on voltage regulator.

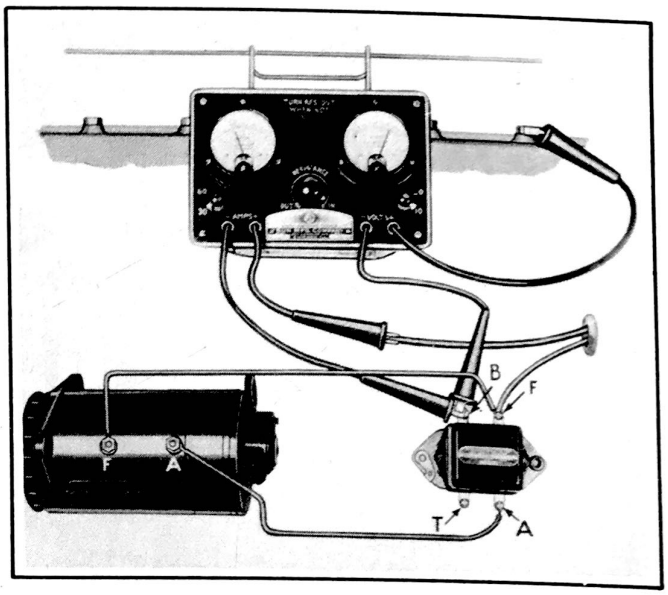

Figure 21 - Voltage Regulator Test

2. Connect positive ammeter lead to terminal of wire just disconnected - negative ammeter lead to "B" terminal on regulator.

3. Connect negative voltmeter lead to "B" terminal on regulator - positive voltmeter lead to ground on engine. Omit jumper wire from regulator to ground.

4. Run engine at speed corresponding to 20 M.P.H. for 15 minutes to warm up.

5. Run engine at speed corresponding to 35 M.P.H. Turn "in" resistance until ammeter reads 10 amperes.

6. With regulator at temperature of 70° F. the voltmeter reading must not be less than 7.1 volts or more than 7.4 volts. If the reading is not within this range, the regulator should be replaced with a new or exchanged unit of the same type obtained from an authorized Auto-Lite Service Station. DO NOT ADJUST.

FUEL PUMP - Test 16 - Fig. 22.

1. Remove sediment bowl and clean.

2. Carefully remove screen and clean, If damaged replace. Check gasket and replace if hard or damaged.

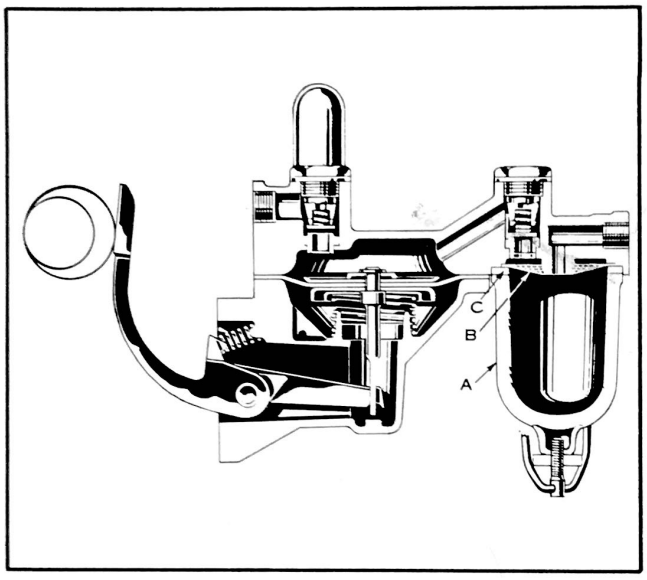

Figure 22 - Fuel Pump

3. Tighten all fuel pump connections.

4. Check for diaphragm leaks - tighten cover screws.

5. On combination fuel and vacuum pump also remove air filter screen cover at the top of the pump and clean the screen.

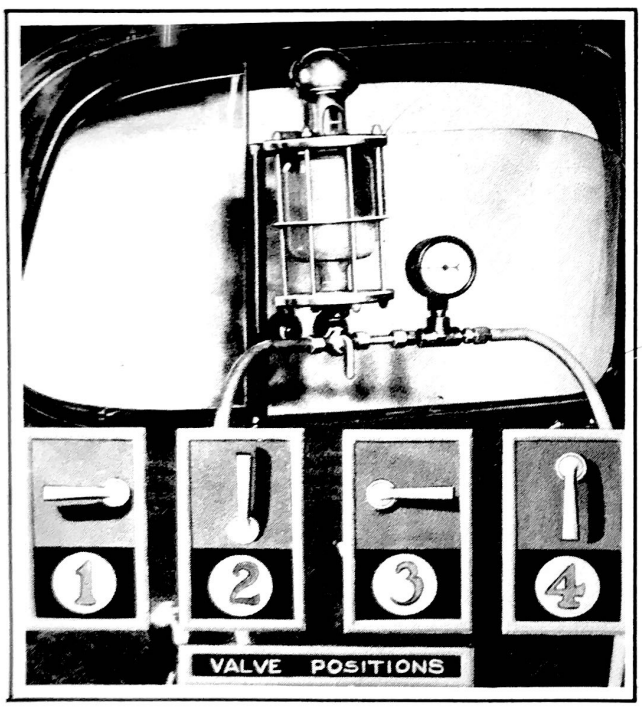

Figure 23 - Fuel Pump Test

FUEL PUMP TEST - Test 17 - Fig. 23.

1. Connect gas per mile gauge to fuel pump outlet and carburetor inlet. Connect pressure gauge into gauge line as shown. Set gauge valve to position 3 and start engine.

2. Pumps with inverted bowl pressure should show from 2 to 3-1/2 lbs. On pumps with appended bowl and combination fuel and vacuum pumps pressure reading should be from 3 to 4-1/2 lbs.

3. High pressure will cause carburetor to flood and low pressure will cause vapor lock.

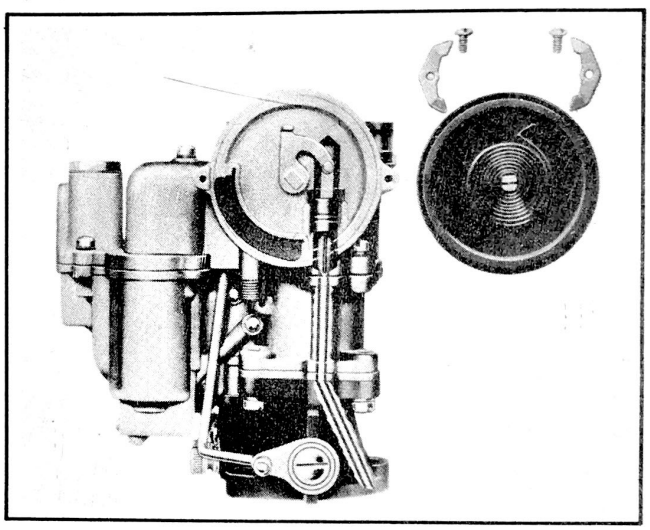

Figure 24 - Climatic Control

CLIMATIC CONTROL - Test 18 Fig. 24.

1. Remove cover - clean screen or replace.

2. Check heat box tube for plugged condition and loose connection.

3. Check choke valve for free movement.

4. Choke valve should open from own weight when cover is removed.

5. When cover is reinstalled, adjust to middle graduation. If engine runs lean during warm-up, turn housing counterclockwise. If rich, turn housing clockwise.

AIR CLEANER - Test 19 - Fig. 25.

Dry Type (Illustrated)

1. Remove wing nut, cover and pad and filter unit.

2. Wash filter unit in gasoline and blow dry.

3. Re-Oil by dipping in engine oil same grade as used in engine and permit excess to drain off.

4. Reinstall parts in reverse order of removal.

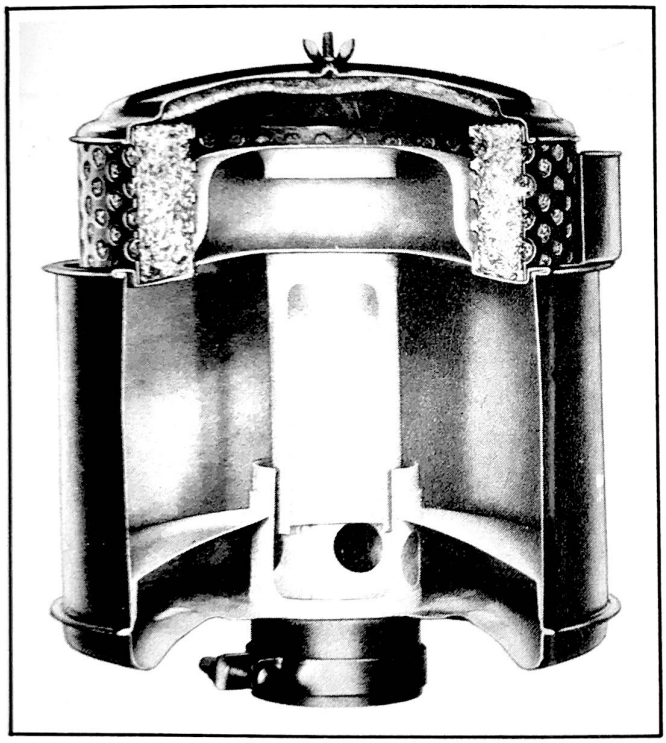

Figure 25 - Air Cleaner--Dry Type

OIL BATH TYPE

1. Remove cleaner from engine.

2. Remove wing nut and cover and filter unit.

3. If necessary, wash filter unit in kerosene and blow dry. DO NOT RE-OIL.

4. Clean old oil and sediment out of sump.

5. Refill with one pint of engine oil, same grade as used in engine.

6. Reinstall parts in reverse order of removal.

TUNING CHECK - Test 20 - Fig. 26.

1. Thoroughly warm engine. Adjust throttle stop screw. NOTE - Idle speed is 600 R.P.M. which is equivalent to 7-1/2 to 8 miles per hour in high gear when the car is equipped with 4-1/9 to 1 axle or 6-1/2 to 7 M.P.H. with 4-5/9 to 1 axle and 6 to 6-1/2 M.P.H. with 4-7/8 to 1 axle.

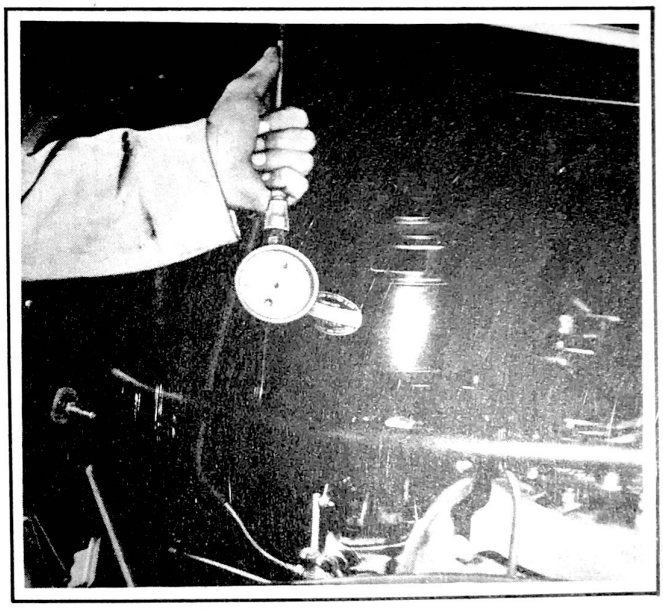

Figure 26 - Tuning Check

2. Attach vacuum gauge to windshield wiper manifold connection.

3. Turn carburetor idle adjusting screw or screws to seat and back out one turn on 6 cylinder models and 3/4 turn on 8 cylinder models.

4. Start engine. Turn one idle screw until maximum gauge reading is obtained. Then turn other (duplex carburetor) for maximum steady reading.

5. Reading of 18 to 21 should be obtained with idle screw on single carburetor

from 1/2 to 1-1/2 turns off its seat - on six cylinder duplex carburetor 1/4 to 1-1/4 turns open - on eight cylinder duplex carburetor 1/2 to 1-1/2 turns open.

FLOAT LEVEL - Test 21 - Fig. 27.

Single - Used on Models 10, 18.

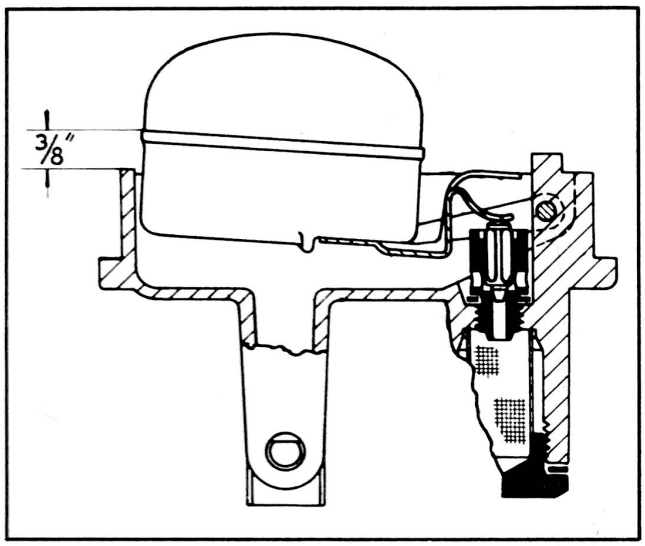

Figure 27
Float Level Adjustment Models 10, 18

1. Remove float chamber cover. Hold cover upside down and measure distance from top of small machined projection on cover to top of seam on float. This dimension should be 3/8" and can be measured with Float Level Gauge J-818-2.

2. Bend lip of arm to adjust.

3. With float chamber cover upside down, draw on inlet. If leakage exists, replace valve needle and seat.

FLOAT LEVEL - Test 22 - Fig. 28.

Duplex - Used on Models 11, 12, 14, 15, 17.

1. Remove float chamber cover and remove gasket from cover. Hold cover upside down and place Float Level Gauge J-818-7 (3/32") between bottom of float and cover.

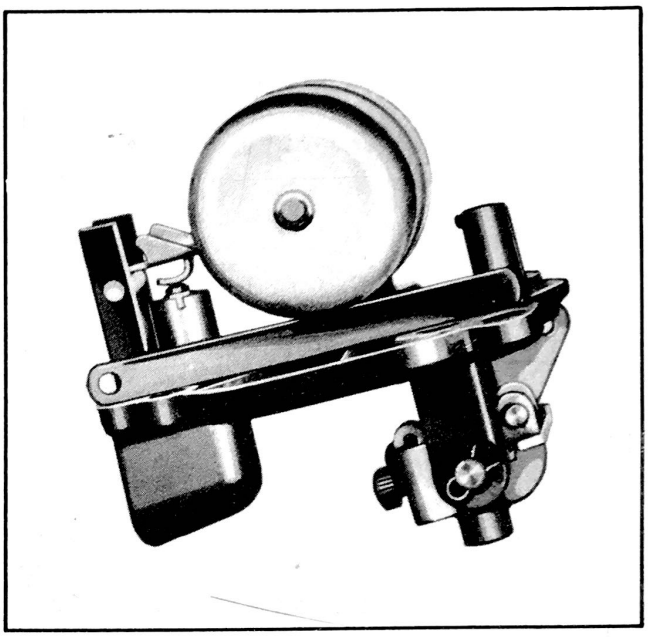

Figure 28 - Float Level Adjustment
Models 11, 12, 14, 15, 17

2. Bend lip of arm to adjust.

3. With float chamber cover upside down, draw on inlet. If leakage exists, replace valve needle and seat.

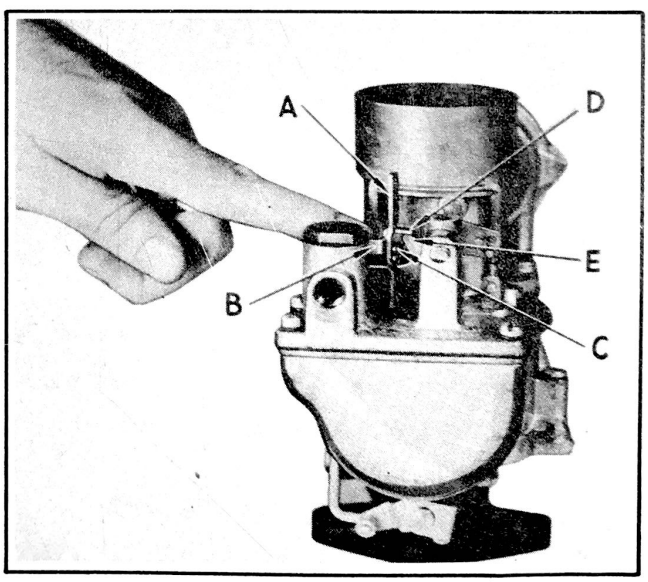

Figure 29 - Metering Rod Setting
Models 10, 18

METERING ROD SETTING - Test 23 - Fig. 29.

Single - Used on Models 10, 18.

1. Remove the metering rod and insert in its place, gauge J-1265 (2.468") (A).

2. Turn out throttle screw, close throttle valve tightly. Press lightly on piston link (B) until metering rod pin rests in shoulder (C) of gauge.

3. Bend lip (D) of piston link so that there is less than .005" clearance between lip and pump arm (E).

METERING ROD SETTING - Test 24 - Fig. 30.

Duplex - Used on Models,11, 12, 14, 15, 17.

1. Remove one metering rod and insert gauge J-1305 (2.280") in its place.

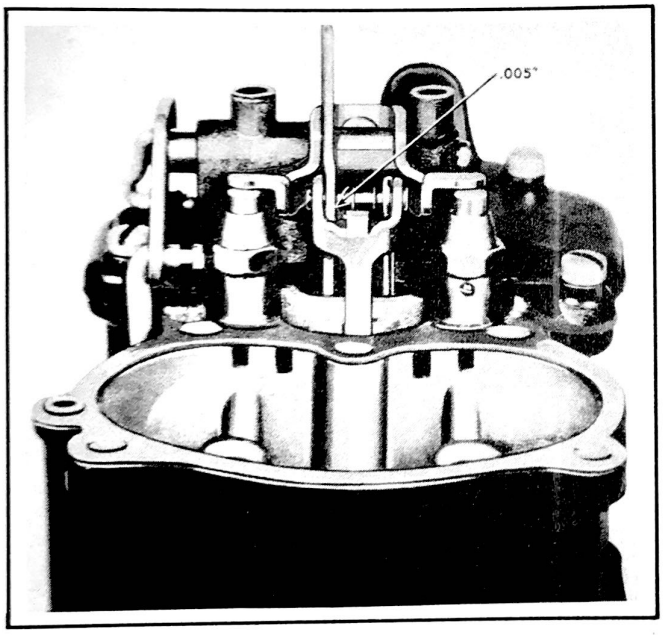

Figure 30 - Metering Rod Setting
Models 11, 12, 14, 15, 17

2. Back out throttle screw. Press lightly on piston link until piston rests on bottom of cylinder. There should now be less than .005" clearance between metering rod pin and shoulder of notch in gauge.

3. Adjust by bending tongue on anti-percolator arm.

ANTI-PERCOLATOR VALVE - Test 25 - Fig. 31.

Single - Models 10, 18.

1. Insert a .030" diameter gauge between lower edge of throttle valve and bore of carburetor (opposite port).

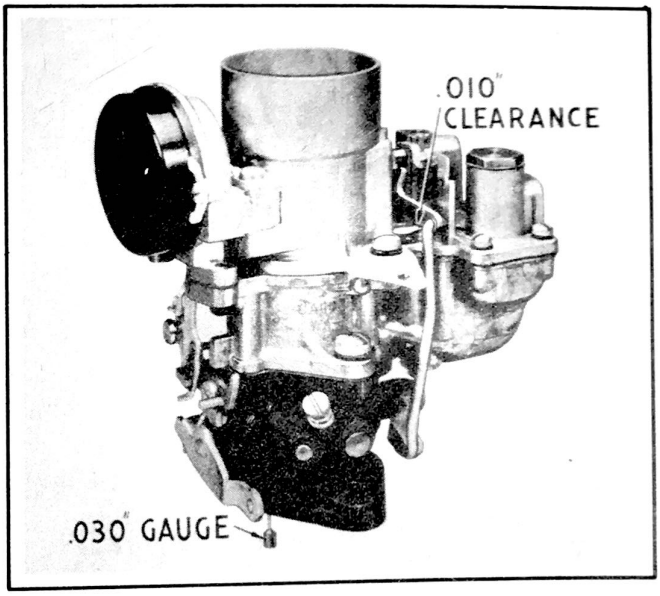

Figure 31
Anti-Percolator Valve Adjustment
Models 10, 18

2. Adjust lip of rocker arm so that .010" clearance obtains between lip and pump arm.

3. The anti-percolator valve must close with only a slight throttle opening and seal the passage air tight. An air leak at the valve will cause faulty acceleration and high speed performance.

ANTI-PERCOLATOR VALVES - Test 26 - Fig. 32.

Duplex - Used on Models 11, 12, 14, 15, 17.

1. Back out throttle screw and close throttle.

2. Bend lips of anti-percolator arm until center of indicator lines on valves are just flush with top of plugs.

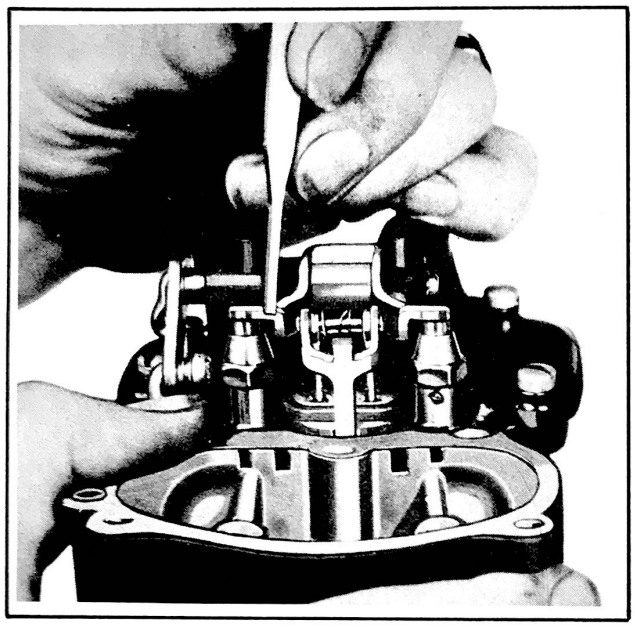

Figure 32 - Anti-Percolator Valve
Models 11, 12, 14, 15, 17

FAST IDLE ADJUSTMENT - Test 27 - Fig. 33

Single - Used on Models 10, 18.

1. With fast idle cam (A) held in normal idle position, tighten throttle lever adjusting screw (B) until it just seats against cam.

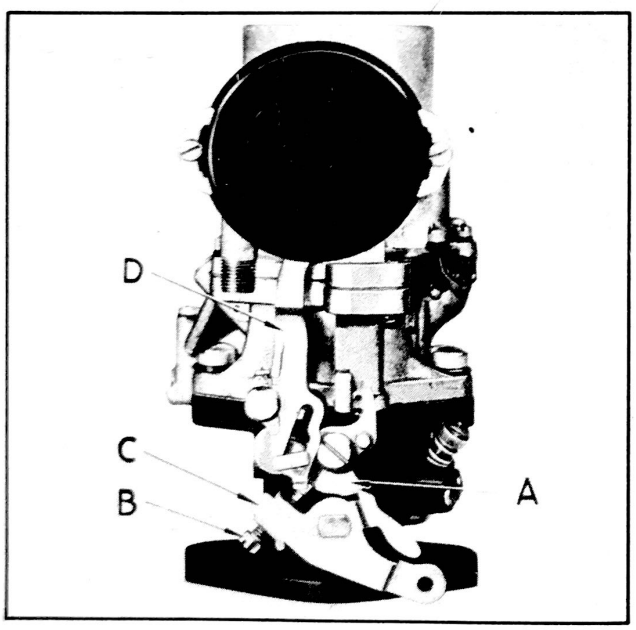

Figure 33 - Fast Idle Adjustment
Models 10, 18

2. Hold throttle lever (C) closed and pull cam (A) back until first (or lower) step on cam is against (not on) set screw.

3. There should now be 5/8" clearance between the inside wall of the air horn and the lower edge of the choke valve.

4. Adjustment can be made by bending at the off-set of the fast idle link (D).

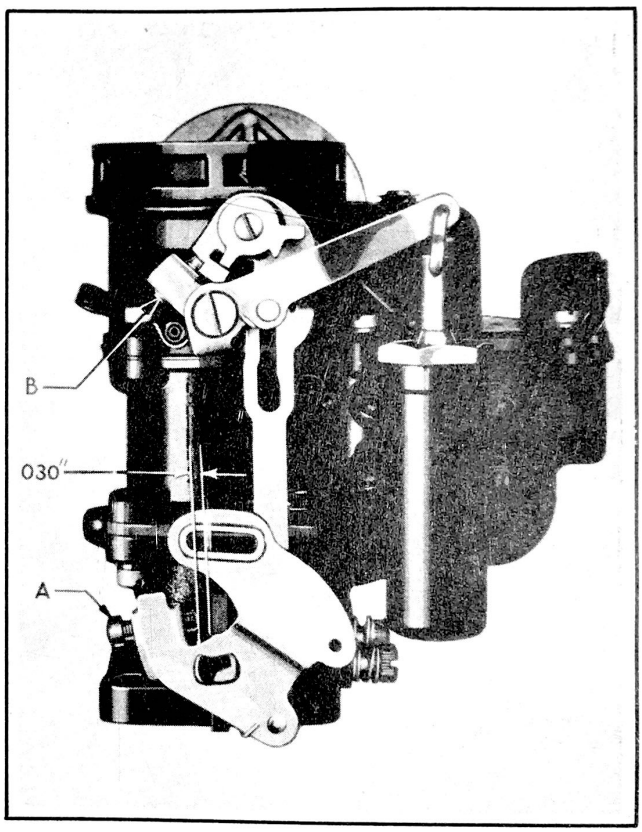

Figure 34 - Fast Idle Adjustment
Models 11, 12, 14, 15, 17
Carburetor With Dash Pot

FAST IDLE ADJUSTMENT - Test 28 - Fig. 34 and 35.

Duplex - Used on Models 11, 12, 14, 15, 17.

1. Set throttle stop screw (A) for normal idle.

2. With choke valve closed, turn fast idle screw (B) until throttle stop screw is held .030" from stop.

FINAL TUNING CHECK

1. After replacing the carburetor repeat test No. 20 with the vacuum gauge.

2. If the vacuum gauge reading is not steady or is low refer to Page 16 for the cause of the trouble.

3. The vacuum gauge is the final check of the accuracy of adjustments.

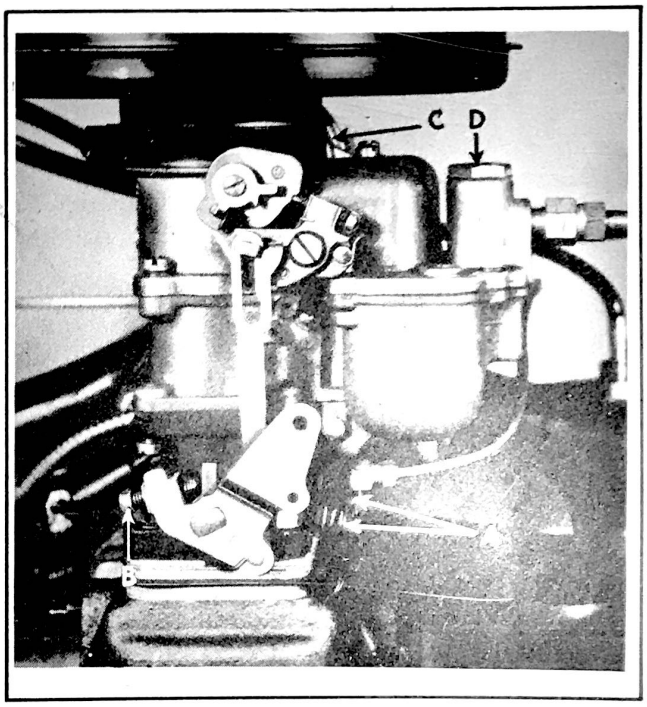

Figure 35 - Idling Adjustment
Models 11, 12, 14, 15, 17
Carburetor Without Dash Pot

REFERENCES

SOURCE OF INFORMATION	DATE	SUBJECT

FUEL SYSTEM

FUEL SYSTEM SPECIFICATIONS

Carburetor make ..... Carter
Carburetor type--
models 10,18 ..... Down draft--1-1/4"
Carburetor type-- Single
models 11,12 ..... Down
models 11,12 ..... Down draft--1"
Duplex
Carburetor type--
models 14,15,17 ... Down draft--1-1/4"
Duplex

Heat control
Models 10,18 ..... Manual
Models 11,12,14
15,17 ..... Automatic

Choke control
All models ..... Automatic
Fuel delivery ..... Pump
Pump driven from cam-
shaft by ..... Cam
Air cleaner and Silencer
Oil wetted--standard.A C
Oil bath--optional . United

Gasoline tank capacity
Models 10 T, 10 P,
10 UCo, 10 UCpe .... 12-1/2 gallons
Models 11,12,14,15,17,
18, 10 Cab, 10 CabPu,
10 Panel ..... 16-1/2 gallons

CARBURETOR SPECIFICATIONS

Models 10 and 18

Dimensions ..... Flange size-1-1/4" Single S.A.E.--Primary venturi-11/32" I.D.--
Secondary venturi-11/16" I.D.--Main venturi-1-1/4".

Float Level ..... Distance from float at free end to float chamber cover to be 3/8" when needle is seated--Use tool J818-2.

Outside Vent ..... No. 10 drill. No inside vent.

Gasoline Intake ..... Square vertical needle No. 48 drill in needle seat.

Gasoline Line Connection ... 5/16" Weatherhead nipple.

Low Speed Jet Tubes ..... Jet No. 70 drill size. By-pass in body No. 53 drill size. Economizer in body No. 48 drill size. Idle bleed No. 50 drill size.

Idle Port ..... Length .165"-Width..032".

Idle Port Opening ..... 122" above valve with valve closed tight.

Idle screw seat ..... No. 46 drill.

Vacuum Spark Port ..... .040".

Set Idle Adjustment Screw .. 3/4 to 1-1/2 turns open. For richer mixture turn screw out Do not idle engine below 600 R.P.M. which is equivalent to 7-1/2 to 8 miles per hour in high gear, when the car is equipped with 4-1/9 to 1 axle or 6-1/2 to 7 M.P.H. with 4-5/9 to 1 axle and 6 to 6-1/2 M.P.H. with 4-7/8 to 1 axle.

Main Nozzles ..... In primary venturi, angle 45° closed tip. Inside diameter No. 30 drill. Upper hole No. 75 drill on 45° angle. Lower hole No. 48 drill on 45° angle.

Metering Rod Specifications ..... (6 cyl. Single Carburetor)			
	Standard----.072"	.072" to .064" x 1/8"	.044" x 21/64" x 1/32"
	1st Leaner--.074"	.074" to .066" x 1/8"	.046" x 21/64" x 1/32"
	2nd Leaner--.076"	.076" to .068" x 1/8"	.048" x 21/64" x 1/32"
	3rd Leaner--.078"	.078" to .070" x 1/8"	.050" x 21/64" x 1/32"

Metering Rod Jet ..... .096" diameter drill.

Metering Rod Setting ..... Use gauge No. J 1265 (2.468").

Accelerating Pump ..... Low pressure type with adjustable stroke. Discharge Jet No. 70 drill size. Intake ball check No. 62 drill size. Discharge ball check No. 45 drill size. Relief passage (to outside) No. 42 drill.

Pump Adjustment ..... 3/16" plunger travel in short stroke.

Vacuum Spark Port ..... .039" to .041" diameter. Bottom of port .021" to .029" above valve.

Viewing carburetor with flange down and float chamber at the right.

Throttle Lever ..... At left. Length 1-1/4", in center of travel. Points toward you.

Choker Valve ..... In air horn-offset butterfly type.

Choke ..... Carter Climatic Control, on left side. Set at center index.

Fast Idle and Unloader ... On left side.

CARBURETOR SPECIFICATIONS

Model 11 and 12.

Dimensions ..... 1" Dual-4 bolt flange--Primary venturi 11/32"--Secondary venturi 21/32"--Main venturi 1-1/16".

Float Level ..... Distance from float to bowl cover to be 3/32" when needle is seated--Use tool J-818-7.

Outside Vent ..... No. 10 Drill size 4 holes. No outside vent.

Gasoline intake ..... Square vertical needle. No. 38 drill hole in needle seat.

Gasoline connection ..... 5/16" Weatherhead nipple.

Low speed jet tubes ..... Jet size No. 69 drill. By-pass (plug) No. 53 drill. Economizer in body No. 56 drill. Idle Bleed No. 54 drill.

Idle Port ..... Length .150". Width .030".

Idle Port Opening ..... .108" to .112" above valve with valve tightly closed.

Idle screw seat ..... No. 52 Drill.

Set Idle Adjustment Screw. 1/4 to 1-1/4 turns open. For richer mixture turn screw out. Do not idle engine below 600 R.P.M. which is equivalent to 7-1/2 to 8 miles per hour in high gear when the car is equipped with 4-1/9 to 1 axle or 6-1/2 to 7 M.P.H.. with 4-5/9 to 1 axle and 6 to 6-1/2 M.P.H. with 4-7/8 to 1 axle.

Main Nozzle ..... In primary venturi, angle 45°. Closed tip. Inside diameter No. 30 drill. Top hole No. 70 drill on 45° angle. Lower hole No. 52 drill on 60° angle.

Metering Rod Specifications ..... (6 Cyl. Duplex)	Standard----.061"	.061" to .057" x 3/16"	.047" x .147" x 1/64"
	1st Leaner--.062"	.062" to .058" x 3/16"	.048" x .147" x 1/64"
	2nd Leaner--.063"	.063" to .059" x 3/16"	.049" x .147" x 1/64"
	3rd Leaner--.064"	.064" to .060" x 3/16"	.050" x .147" x 1/64"

Metering Rod Jet ..... .082" drill.

Metering Rod Setting ..... Use gauge J 1305 (2.280").

Accelerating Pump ..... High pressure type-spring operated lever, with adjustable pump stroke. Discharge jet twin No. 74 drill. Intake ball check No. 40 drill. Discharge ball check No. 50 drill. Relief passage (to outside) No. 42 drill.

Pump Adjustment ..... 9/32" plunger travel-in long stroke.

Vacuum Spark Port ..... .040" Top of port .029" to .033" above valve.

View carburetor with flange down and float chamber in rear.

Throttle Lever ..... Adjusting, on right side. Length 1-1/4", in center of travel. Points forward.

Choke ..... Climatic control on left isde. Set on center index.

Choke Heat Suction Holes . Location, in body. Size No. 34 drill.

Choke Valves ..... In air horn. Butterfly type (offset type).

Fast Idle and Unloader ... On right side.

CARBURETOR SPECIFICATIONS

Models 14, 15, 17
(8 cylinder cars)

Dimensions ..... 1-1/4" Dual-4 bolt flange--Primary venturi 11/32"--Secondary venturi 19/32" -Main venturi 1-3/16".

Float Level ..... Distance from float to bowl cover to be 3/32" when needle is seated--Use tool J 818-7.

Outside Vent ..... No. 10 drill size. 4 holes. No inside vent.

Gasoline Intake ..... Square vertical needle. No. 38 drill hole in needle seat.

Gas Line Connection ..... 5/16" weatherhead nipple.

Low Speed Jet Tube ..... Jet size No. 66 drill. By-pass (plug) No. 54 drill. Economizer in body No. 56 drill. Idle bleed No. 54 drill.

Idle Port ..... Length .175"-Width .030".

Idle Port Opening ..... .135" above upper edge of valve with valve tightly closed.

Idle Screw Seat ..... No. 52 drill.

Set Idle Adjustment Screw. 1/2 to 1-1/2 turns open. For richer mixture, turn screw out. Do not idle engine below 600 R.P.M.. which is equivalent to 7-1/2 to 8 miles per hour in high gear when the car is equipped with 4-1/9 to 1 axle or 6-1/2 to 7 M.P.H. with 4-5/9 to 1 axle and 6 to 6-1/2 M.P.H. with 4-7/8 to 1 axle.

Main Nozzle..... In primary venturi, angle 45°. Closed tip. Inside diameter No. 30 drill. Top hole No. 70 drill on 45° angle. Lower hole No. 52 drill on 60° angle.

Metering Rod Specifications ..... (8 cyl. Duplex)

Standard----.0625" .0625" to .055" x .141" .044" x .162" x 1/64"
1st Leaner--.0635" .0635" to .056" x .141" .045" x .162" x 1/64"
2nd Leaner--.0645" .0645" to .057" x .141" .046" x .162" x 1/64"
3rd Leaner--.0655" .0655" to .058" x .141" .047" x .162" x 1/64"

Metering Rod Jet ..... .086" drill.

Metering Rod Setting ..... Use gauge J 1305 (2.280").

Accelerating Pump ..... High pressure type (spring operated) with adjustable pump stroke. Discharge jet twin No. 74 drill. Intake ball check No. 40 drill. Discharge ball check No. 50 drill. Relief passage (to outside) No. 42 drill.

Pump Adjustment ..... 9/32" plunger travel (in long stroke).

Vacuum Spark Port ..... None.

View carburetor with flange down and float chamber in the rear.

Throttle Lever ..... Adjusting, on right side. Length 1-1/4", in center of travel. Points forward.

Choke ..... Climatic control on left side. Set on center index.

Choke Heat Suction Hole .. Location, in body. Size No. 36 drill.

Choke Valve ..... In air horn. Butterfly type (offset type).

Fast Idle and Unloader ... On right side.

CARBURETOR

All carburetors are Carter downdraft using a metering rod to control both the economy and power mixtures. This metering rod is automatic in action and covers all driving speeds from idle to wide open throttle thereby providing for the maximum in economy.

The anti-percolator unit is used on all models and assures easy starting in hot weather with a hot engine.

The climatic control is automatic in action and is an integral part of the carburetor. It automatically controls the fuel mixtures during the entire warming up period preventing stalling and providing a correct mixture of air and fuel.

The single carburetor used on Models 10 and 18 has a triple venturi which passes fuel into the intake manifold, giving smoothness and power. A pneumatic type accelerating pump compresses the air in the pump cylinder with the slightest opening of the throttle causing an immediate discharge of fuel.

CARBURETOR GASKET ARRANGEMENT. When mounting a carburetor the following arrangement of gaskets and insertion of heat deflector must be followed. Place four gaskets on the manifold studs, then the heat deflector, then three more gaskets, then the governor with one gasket between the carburetor and the governor.

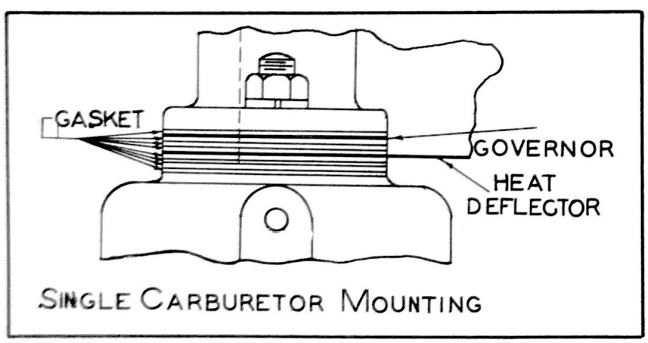

Figure 37
Single Carburetor Mounting
Models 10, 18

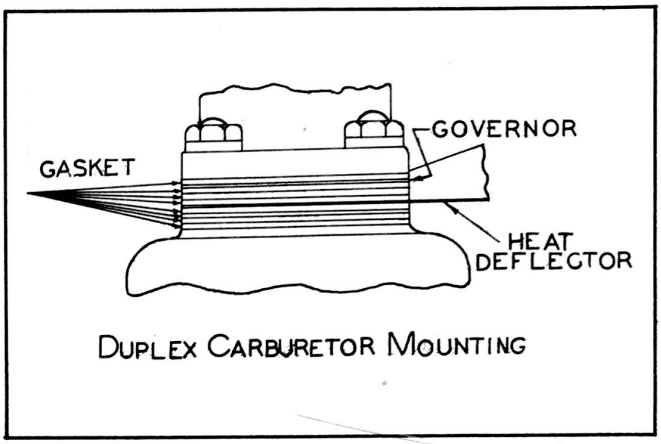

Figure 38
Duplex Carburetor Mounting
Models 11, 12, 13, 15, 17

After removing the governor replace the gasket which will make four gaskets on each side of the heat deflector (see Fig. 37 and 38).

CARBURETOR DISASSEMBLING

Single type used on Models 10 and 18 as shown in Fig. 39.

1. Remove dust cover, lockwasher and attaching screw.

Examine inside of dust cover for marks that might indicate that the metering rod assembly has been dragging, a condition that is caused by improper installation of the dust cover.

2. Remove fast idle cam attaching screw and the fast idle cam.

3. The following parts are the *choke circuit* and should be kept in a separate group as they are removed.

Remove two screws on top and one beneath the climatic control housing holding the air horn and its gasket.

Remove thermostatic coil and housing (retainer screws and retainers).

Remove piston housing strainer.

Remove choke valve screws and choke valve.

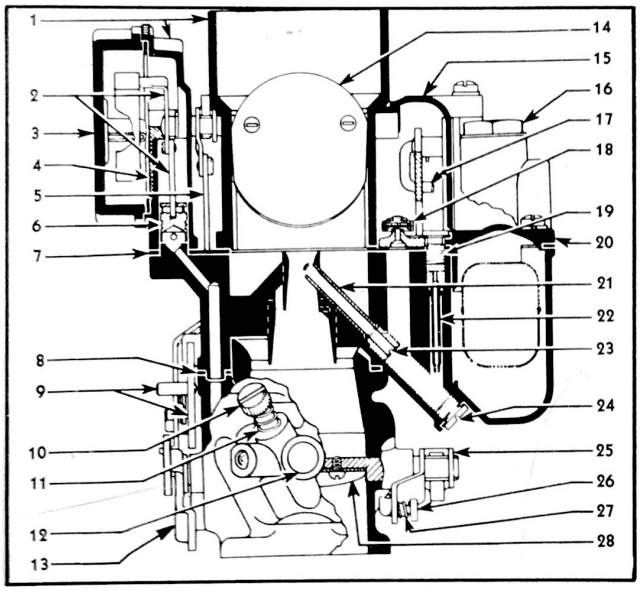

Figure 39

Carburetor-Single - Models 10, 18

1. Air horn and piston housing.
2. Choke piston lever, link and shaft.
3. Thermostatic coil and housing.
4. Piston housing strainer.
5. Choke lever screw and link.
6. Choke piston.
7. Air horn gasket.
8. Body flange gasket.
9. Fast idle cam and pin.
10. Idle adjustment screw.
11. Adjustment screw spring.
12. Idle hole rivet plug.
13. Throttle shaft and lever.
14. Choker valve.
15. Dust cover.
16. Strainer nut and gasket.
17. Connector link.
18. Anti Percolator cap and rocker arm.
19. Low speed passage plug and gasket.
20. Bowl cover.
21. Nozzle.
22. Low speed jet assembly.
23. Nozzle retainer plug.
24. Nozzle passage plug and gasket.
25. Throttle shaft arm and screw.
26. Spring retainer.
27. Connector rod spring.
28. Throttle valve.

Loosen screw on choker lever, screw and links assembly four full turns. Pry the lip on the lever away from the shaft with a screwdriver or pliers.

Revolve choke shaft counterclockwise until the piston is free from the cylinder and remove the assembly intact.

CAUTION: Do not remove the pin holding the piston housing and air horn castings together because they are line reamed at the factory and should not be disassembled.

4. Keep the following parts in a separate *Pump group.*

Remove the pin spring, spring retainer spring from the throttle connector rod and remove the rod.

Remove the pin spring and connector link from the pump arm.

5. Keep the following parts in a separate *Low Speed Circuit group.*

Remove the low speed passage plug and gasket assembly. These are located next to the anti-percolator cap.

6. Keep the following parts in a separate *"Float Circuit"--"High Speed Circuit" or "Pump Circuit".*

Remove the bowl cover attaching screws and lockwashers, lift off bowl cover assembly intact and remove vacuum piston spring from vacuum cylinder in the casting. (This spring is a *High Speed Circuit* item and the rest are *Float Circuit.)*

Remove the piston from the link by revolving a quarter turn. Place parts in High Speed Circuit group.

Remove piston link and metering rod from the bowl cover assembly and disassemble rod and link. Do not lose the small metering rod disc. Place parts in *High Speed Circuit* group.

Remove bowl cover gasket and place in *Float Circuit* group. Remove pump arm and countershaft assembly and place parts in *Pump Circuit* group.

Remove float and lever assembly, needle and seat assembly, strainer nut and gasket assembly and strainer. Place parts in *Float Circuit.*

7. Remove anti-percolator cap and rocker arm assembly and spring by removing anti-percolator pin. Place parts in *High Speed Circuit* group.

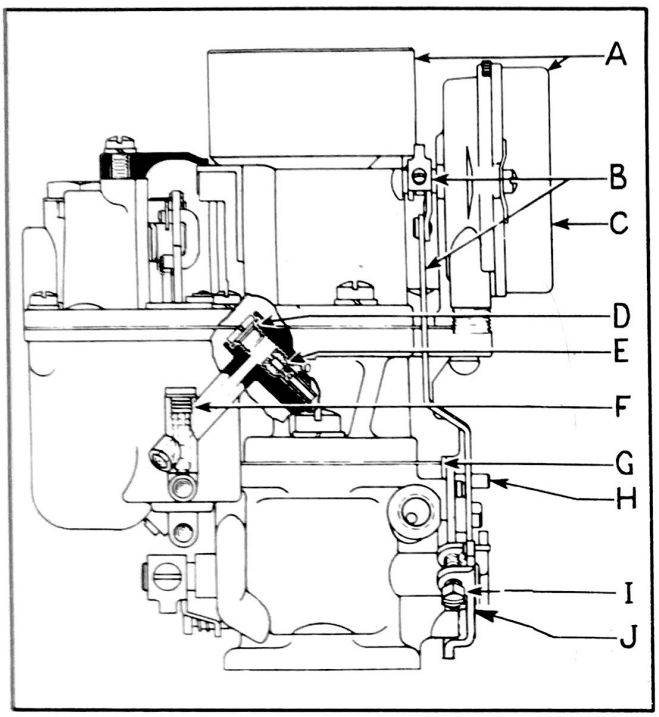

Figure 40

Carburetor Pump Circuit, Single type, used on Models 10, 18

A. Air horn and climatic control.
B. Choker lever, screw and link.
C. Thermostatic coil and housing.
D. Pump jet plug and gasket.
E. Pump jet.
F. Pump discharge ball retainer plug and gasket.
G. Body flange gasket.
H. Fast idle cam and pin.
I. Throttle lever adjusting screw.
J. Throttle shaft and lever.

8. Remove pump plunger and rod assembly and the pump spring. Remove pump strainer and check ball from bottom of pump cylinder. Place parts in *Pump Circuit* group.

9. Remove nozzle passage plug and gasket assembly, nozzle retainer plug and nozzle using tool J 508. Make sure that the small nozzle gasket is removed from the nozzle passage. Place parts in *High Speed Circuit* group.

10. Remove the metering rod jet and gasket assembly. Place in *High Speed Circuit* group.

11. Remove the pump jet passage plug and gasket assembly. Remove pump jet. Place parts in *Pump Circuit* group.

12. Remove pump discharge ball retainer and gasket assembly. Remove check ball. Place parts in *Pump Circuit* group.

13. Remove low speed jet assembly. Place in *Low Speed Circuit* group.

14. Remove body flange assembly and gaskets.

15. Remove idle adjusting screw, spring and idle port rivet plug. Place parts in *Low Speed Circuit* group.

16. Remove throttle shaft arm and screw assembly. Place parts in *Low Speed Circuit* group.

17. Remove throttle valve screws, throttle valve, and throttle shaft with lever assembly. Place in *Low Speed Circuit* group.

CARBURETOR ASSEMBLING

Single type used on Models 10 and 18.

Clean all parts except the cork parts with clean gasoline using a small brush and a clean pan.

Blow through all passages in the casting with an air hose and use a compressed air hose on all parts before reinstalling.

Replace any worn parts and use new gaskets.

Carbon in the bore of the carburetor must be cleaned off by using sand paper (not emery cloth) or by scraping.

All parts must be tight after installing.

1. Install needle seat assembly, strainer, nut and gasket in the bowl cover.

2. Install float, needle and float lever pin. Then set float level as shown on Page 46.

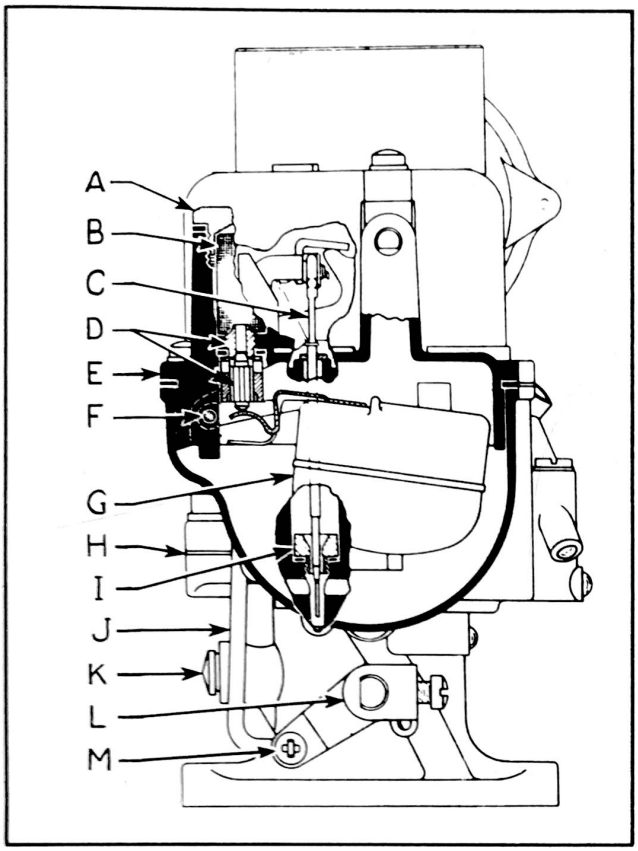

Figure 41
Carburetor Pump Float Circuit, Single type, used on Models 10, 18

A. Strainer nut and gasket.
B. Bowl cover strainer.
C. Metering rod.
D. Needle and seat.
E. Bowl cover.
F. Float lever pin.
G. Float and lever.
H. Body flange gasket.
I. Metering rod jet and gasket.
J. Throttle connector rod.
K. Idle hole rivet plug.
L. Throttle shaft arm and screw.
M. Spring retainer.

3. With the manifold side of the carburetor flange facing up, install the throttle shaft and lever assembly. Back out the throttle lever adjusting screw.

A throttle shaft that is worn or a lever that is loose on shaft should be replaced.

4. Install the throttle valve and it is recommended that new valve screws be used. The trademark on the throttle valve should be facing up and to the idle port side. With the valve screws loose, tap the throttle valve lightly to centralize it in the carburetor bore. The throttle lever adjusting screw must be backed off so that the valve will seat.

5. Examine throttle shaft arm and if the holes are worn replace it. Install the throttle shaft arm and screw assembly. Set the arm and tighten the screw so that the throttle will move freely.

6. Install idle port plug, idle adjusting screw and spring. It is recommended that a new idle port plug be used and if the idle adjusting screw is burred it should be replaced. There is no copper washer used on the port plug. Adjust the idle adjusting screw according to instructions on Page 50.

7. Install body flange assembly using a new gasket.

8. Install low speed jet. Make certain that the hole at the lower end is open. Work the jet well into its seat by moving it back and forth and then remove it and examine to be certain that the jet seats in the casting at the shoulder. Reinstall.

9. Install the pump jet and pump jet passage plug and gasket assembly. Make certain the small hole in the casting from the pump jet passage to the outside is open.

10. Install discharge check ball and pump discharge ball retainer and gasket assembly.

11. Install intake check ball in bottom of pump cylinder; pump strainer; pump spring; plunger and rod assembly.

12. Install metering rod jet assembly. If either the metering rod or the metering rod jet show wear replace both the rod and the jet. New part should never be used with an old part.

13. Assemble a new gasket on the bowl cover. Install the anti-percolator cap and rocker assembly; pump arm and countershaft assembly in the bowl cover. Install

piston link assembly in the bowl cover and attach piston. Invert carburetor casting as assembled onto the bowl cover and then install the screws and lock washers.

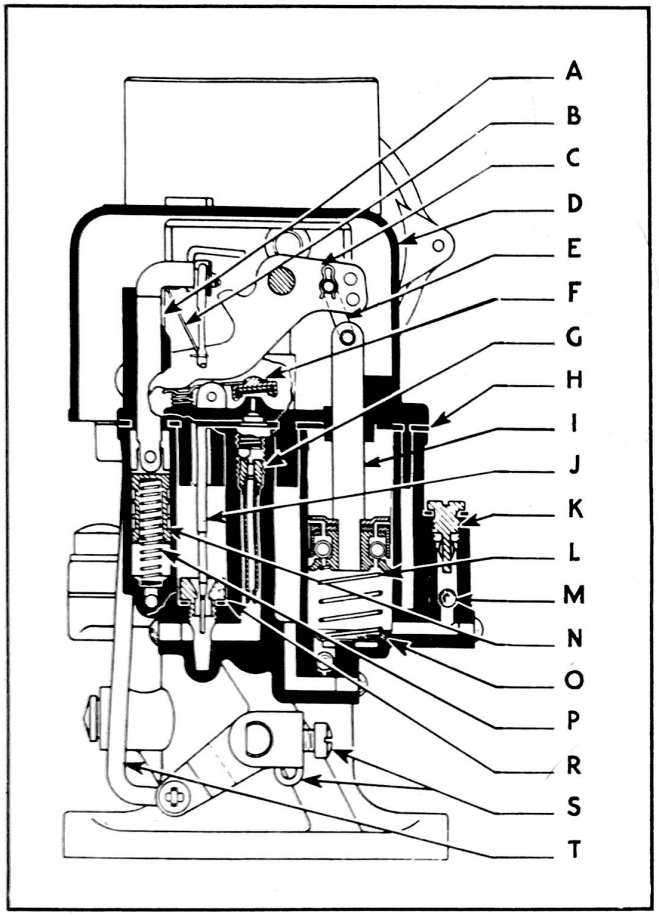

Figure 42
Carburetor-Single - Models 10, 18

A. Piston link and spring.
B. Metering rod spring.
C. Pump arm and countershaft.
D. Dust cover.
E. Connector link.
F. Anti percolator cap and rocker arm assembly.
G. Low speed jet assembly.
H. Bowl cover gasket.
I. Plunger and rod assembly.
J. Metering rod.
K. Pump discharge retainer plug assembly.
L. Pump spring.
M. Pump check ball.
N. Vacuum piston and pin assembly.
O. Pump strainer.
P. Vacuum piston spring.
R. Metering rod jet and gasket.
S. Throttle shaft arm and screw.
T. Throttle connector rod.

14. Install low speed passage plug and gasket assembly located next to anti-percolator cap in the bowl center.

15. Install connector link in the lower hole in the pump arm and pump shaft with pin spring at top and ends of the link away from the bore. Install throttle connector rod.

16. Adjust Pump--see Page 57

17. Adjust Metering Rod--see Page 53

18. Adjust Anti-Percolator--see Page 55

19. Install nozzle and a new gasket using tool J 508. The flat side of the nozzle must be facing upward. Then install the nozzle retainer plug and nozzle passage plug and gasket assembly.

20. Install a new air horn gasket; air horn and piston housing assembly. Install the screw under the piston housing.

21. Install the choke shaft assembly and piston. Install choker lever; screw and link assembly behind the piston housing with the choke shaft and piston.

22. Install the choker valve and use new choker valve screws. Loosen the choker valve screws and tap the choker valve lightly to centralize it in the air horn. Tighten the screws.

Choker valve should move freely in the air horn. Tighten choker lever screw.

Choke should fall open of its own weight.

23. Install strainer in the piston housing. If the strainer is dirty or clogged it is suggested that it be replaced.

24. Install thermostat housing and coil assembly with the word "Climatic" at the bottom and turn it counterclockwise until the center marking on the piston indicates that the choke is set at the

index. Install housing retainers and attaching screws and tighten securely.

25. Install fast idle cam with attaching screw.

26. Adjust fast idle--see Page 51

27. Adjust unloader--see Page 61

28. Adjust lock out--see Page 61

29. Pack the dust cover attaching screw hole in the bowl cover with graphite grease and install the dust cover and attaching screw and the lockwasher. *Never use oil or grease anywhere else on the carburetor or on the linkage.*

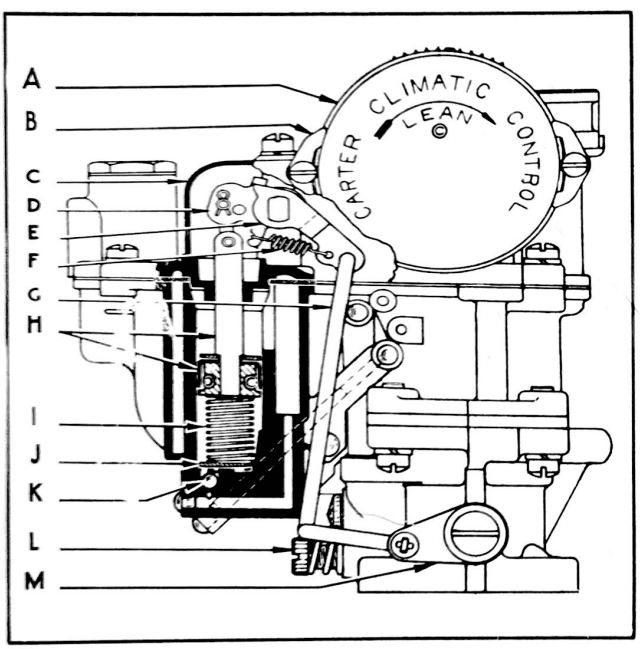

Figure 43

Carburetor-Duplex - Dashpot Type
Models 11, 12, 14, 15, 17

A. Thermostat coil and housing.
B. Thermostat housing retainer.
C. Dust cover.
D. Pump arm and collar.
E. Pump operating lever and countershaft
F. Pump arm spring.
G. Throttle connector rod.
H. Pump plunger and rod.
I. Pump spring.
J. Pump strainer.
K. Ball.
L. Idle adjustment screw.
M. Throttle shaft arm.

CARBURETOR DISASSEMBLING

Duplex type, used on Models 11, 12, 14, 15, 17.

NOTE: There are two types of Duplex carburetor used one of which has the slow closing throttle operation, (Dashpot) described on page 56 and the other carburetor is constructed and operates in the same manner but does not have this slow closing throttle device.

1. Remove dust cover. (Fig. 43).

2. Remove dashpot connector link, dashpot arm, pin and screw assembly and spring. (Dashpot not used on all carburetors.)

3. Remove air horn assembly intact. The screw inside air horn beneath choke valve must be removed. Discharge needle inserted in this hole. (See operation 7).

4. Disconnect throttle connector rod at both ends.

5. Remove bowl cover assembly intact and pump plunger spring.

6. Remove from bowl cover, metering rods and vacuum piston assembly intact. Do not lose metering rod discs. Then lift out vacuum piston spring and dash pot plunger and rod assembly. (Dashpot not used on all carburetors.

7. Remove strainer from bottom of pump cylinder (invert carburetor; strainer and pump discharge needle will drop out), ball retainer ring and pump check ball beneath strainer. Use tool J 816-6. DO NOT ATTEMPT TO REMOVE PUMP JETS.

8. Remove anti-percolator valve assemblies.

9. Remove both low speed jet bleeder plugs and both low speed jets (see Fig. 6). (Use tool J 816-1 to remove low speed jets.)

10. Remove both metering rod jet assemblies.

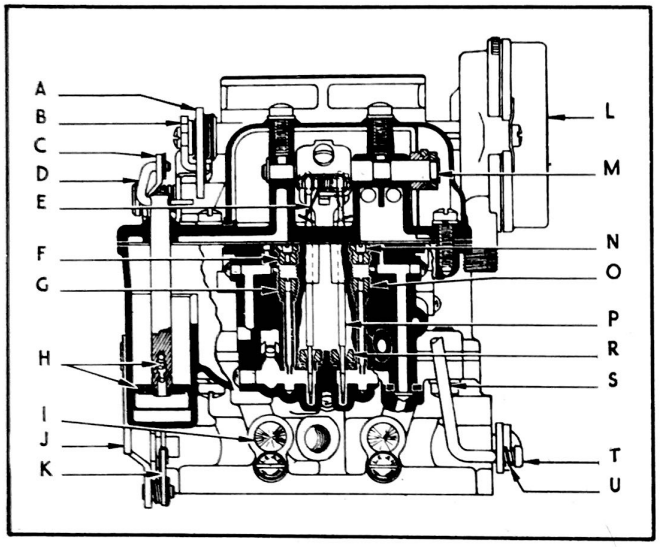

Figure 44

Carburetor-Dash Pot Type-Duplex
Models 11, 12

NOTE: The models 14, 15, 17 (8 cylinder) carburetor does not have the hole shown for the vacuum line to the distributor vacuum control.

A. Fast idle cam and collar.
B. Choker trip lever.
C. Dash pot arm pin and screw.
D. Dash pot connector link.
E. Metering rod spring.
F. By pass bleeder plug.
G. Low speed jet assembly.
H. Dash pot lunger and rod assembly.
I. Idle port rivet plug.
J. Throttle shaft and lever assembly.
K. Fast idle connector link.
L. Thermostatic coil and housing assembly.
M. Anti percolator arm and screw.
N. By-pass bleeder plug.
O. Low speed jet assembly.
P. Metering rod.
R. Metering rod jet assembly.
S. Throttle connector rod.
T. Spring retainer.
U. Connector rod spring.

11. Remove body flange assembly intact. Remove three rubber gaskets beneath float bowl.

12. Remove both nozzle passage plugs.

13. Remove both nozzle retainer plugs and nozzles and nozzle gaskets.

14. Remove both idle adjusting screws from flange assembly and idle port rivet plugs.

15. Remove throttle shaft arm attaching screw, washer and throttle shaft arm.

16. Remove throttle valve screws and throttle valves and throttle centering screw.

17. Remove throttle shaft and lever assembly, fast idle link and spring. Disassemble.

18. Remove float pin, float assembly, needle and needle seat from bowl cover.

19. Remove connector link from pump arm and plunger shaft.

20. Loosen anti-percolator arm screw, pin spring and slide out pump arm and shaft assembly and dismantle.

21. Remove strainer nut and gasket and strainer.

22. Remove thermostatic coil and housing assembly and gasket from air horn and lift out screen (see Fig. 45).

23. Remove choker trip lever screw from choke shaft and lift off trip lever, washer and fast idle cam and spring assembly.

24. Remove choke valve screws and choke valve.

25. Turn choke lever until piston is free from cylinder and remove assembled parts. Do not lose piston pin.

NOTE: Wash all parts in a good gum solvent, except coil and housing assembly. Blow out all passages with compressed air and scrape carbon from bores of flange and replace all worn and damaged parts. Don't remove or damage pump jets.

CARBURETOR ASSEMBLING

Duplex type, used on Models 11, 12, 14, 15, 17.

NOTE: There are two types of Duplex carburetor used, one of which has the slow closing throttle device, (Dashpot) described on page 56 and the other carburetor

is constructed and operates in the same manner but does not have this slow closing throttle device.

Use all new gaskets when reassembling.

1. Group all *float circuit* parts removed in operations 18 and 21.

2. Group all *low speed circuit* parts removed in operations 9-11-14-15-16 and 17.

3. Group all *high speed circuit* parts removed in operations 4-6-8-10-12 and 13.

4. Group all *pump circuit* parts removed in operations 2-7-19 and 20.

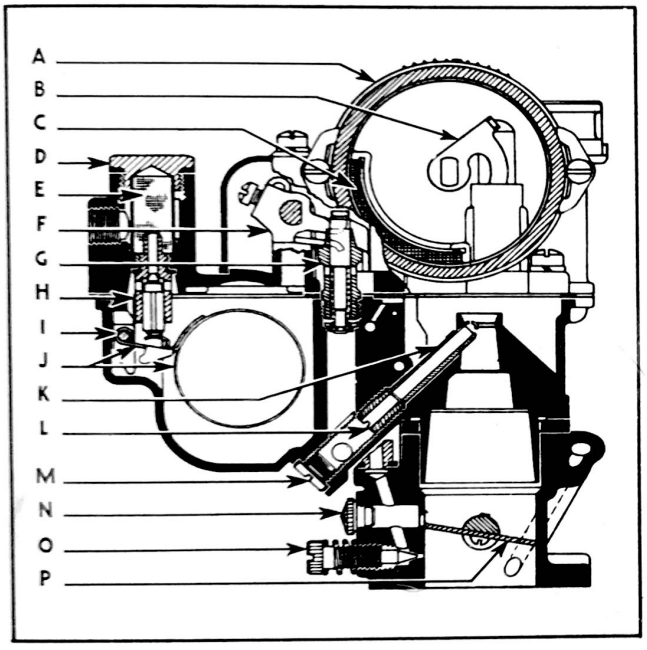

Figure 45
Carburetor-Duplex Dash Pot Type
Models 11, 12, 14, 15, 17

A. Airhorn and piston housing
B. Choke piston lever, link and shaft
C. Piston housing strainer
D. Strainer nut and gasket
E. Bowl cover strainer gauze
F. Anti-Percolator arm and screw
G. Anti-Percolator valve
H. Needle and seat assembly
I. Float lever pin
J. Float and lever assembly
K. Nozzle
L. Nozzle retainer plug
M. Nozzle passage plug
N. Idle port rivet plug
O. Idle adjustment screw
P. Throttle valve

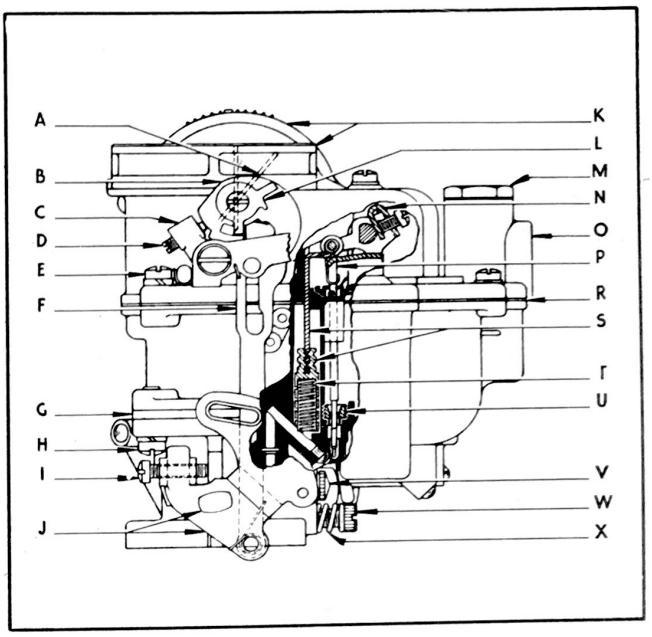

Figure 46
Carburetor-Dash Pot Type-Duplex
Models 11, 12, 14, 15, 17

A. Choker valve.
B. Fast idle cam and collar.
C. Dash pot arm pin and screw.
D. Fast idle adjustment screw.
E. Air horn attaching screw.
F. Fast idle connector link.
G. Body flange gasket.
H. Body flange attaching screw.
I. Throttle lever adjusting screw.
J. Throttle shaft and lever assembly.
K. Air horn and climatic control.
L. Choker trip lever.
M. Strainer nut and gasket.
N. Anti percolator arm and screw.
O. Bowl cover and strainer.
P. Metering rod.
R. Bowl cover gasket.
S. Vacuum piston and link.
T. Vacuum piston spring.
U. Metering rod jet and gasket.
V. Idle port rivet plug. asket.
W. Idle adjustment screw.
X. Adjustment screw lock spring.

5. Group all *choke circuit* parts removed in operations 2-22-23-24 and 25.

6. Install *float circuit* parts in bowl cover. (Needle seat and gasket, needle, float assembly, float pin, bowl cover strainer and nut and gasket assembly.)

7. Set float lever to 3/32". Use gauge J 818-7. Gauge both ends of float from machined surface of casting.

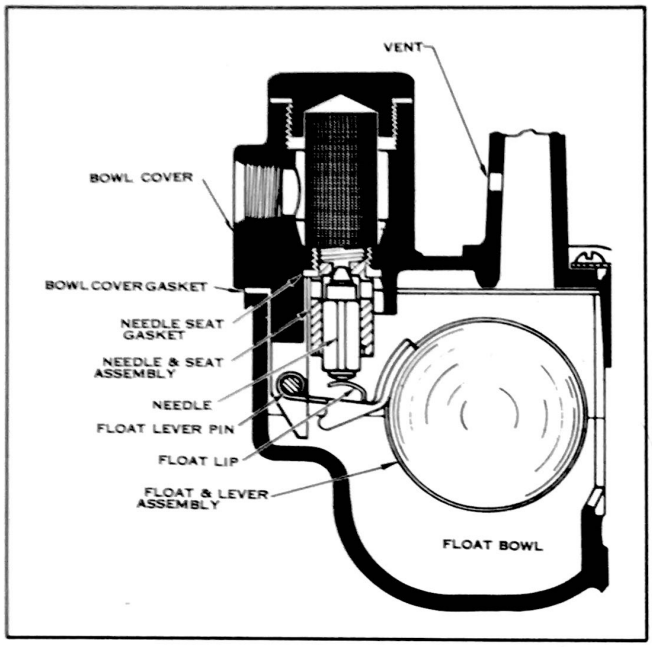

Figure 47 - Float Circuit
Models 11, 12, 14, 15, 17

8. *Low speed circuit* reassembly; First, insert throttle shaft and lever assembly and throttle centering screw.

9. Back out throttle lever adjusting screw and then install throttle valves from lower side of flange casting. Use new screws. Trademark ("C" in circle) on valves should be toward manifold and on idle port side of bores. Hold valves with fingers and tap lightly with screwdriver on high side of valves. Do not release this grip until all four screws are tightened.

10. Install idle adjusting screws and new idle port plugs.

11. Install three new rubber gaskets and body flange gasket on under side of body casting.

12. Attach flange assembly to bowl.

13. Install bowl low speed jet assemblies and low speed jet bleeder plugs in casting. Work jets well into casting to insure good seat.

14. Install anti-percolator valve assemblies.

15. Install pump intake check ball and retainer ring at bottom of pump cylinder. Install strainer.

16. Install pump plunger spring, pump plunger and dashpot plunger assembly. (Dashpot not used on all carburetors).

17. Install both metering rod jet assemblies.

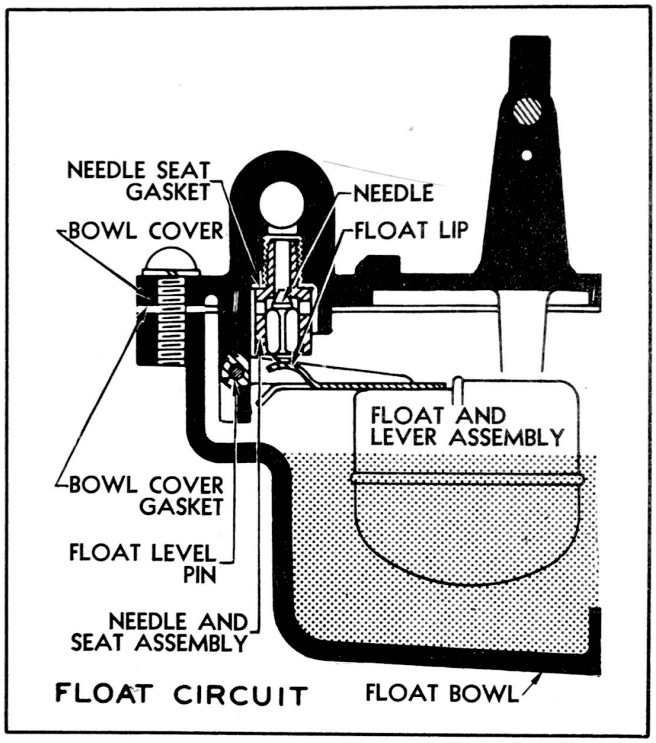

Figure 48
Float Circuit Models 10, 18

CAUTION: Do not attempt to tighten metering rod jets too tightly. Seat them firmly in casting.

18. Install vacuum piston spring and vacuum piston assembly (see Fig. 46).

19. Install new bowl cover gasket and bowl cover as assembled. Tighten screws evenly.

20. Be sure that old nozzle gaskets have been removed from casting. Install both nozzles (flat side up), new nozzle gaskets and nozzle retainer plugs, tightening securely. Then install both nozzle passage plugs.

21. Install pump arm and collar assembly on shaft, anti-percolator arm and metering rod arm in position then slide shaft into place. Tighten anti-percolator arm screw.

22. Install connector link on pump shaft and in outer (long) hole of pump arm. Pin spring should be at top against outside of pump arm.

23. Install throttle connector rod, spring and spring retainer.

24. Install pump discharge needle and air horn, using new gasket. Tighten screws evenly. Do not forget special screw inside air horn. No washer is used on this screw.

25. Install choke shaft assembly and piston.

26. Install choke valve, using new screws. Center valve before tightening screws. Valve must fall open of its own weight after installation.

27. Install fast idle link and spring to lever on throttle shaft.

28. On end of choke shaft, install fast idle cam with spring, washer, then choker trip lever and screw.

29. Install dashpot arm, pin and screw assembly, spring and dashpot connector link. (Dashpot not used on all carburetors).

30. Install climatic control screen and thermostatic coil and housing assembly. For average driving and climatic conditions, coil housing should be set on index.

31. Install dust cover, using a little light graphite grease in screw holes.

IF CARBURETOR LOADS UP after considerable service, float level should be checked. Wear on lip of float will raise float level. Float level may be reset by bending lip up to lower float level. Only a very slight bend is needed.

ENGINE STALLS WHILE IDLING, reset throttle adjusting screw and idle adjustment screws to specifications. If this adjustment does not correct the trouble, remove low speed jets and clean thoroughly with compressed air. Examine and see that jets seat gasoline-tight in body. If not, replace with new jet of identical specifications.

POOR ACCELERATION may be due to damaged or worn plunger leather in accelerating pump, loose plunger, corrosion or sediment in pump cylinder, or incorrect adjustment.

Pump needle passage inside air horn should be cleaned with compressed air. All check valves must be seated gasoline-tight. Be sure that retaining ring at bottom of pump cylinder retains check ball in place.

CARBURETOR REPAIR PROCEDURE

When servicing either the single or duplex carburetors the following procedure should be used in the order given below:

1. Gauge port opening.
2. Set idle adjustment screw.
3. Set float level.
4. Check pump travel.
5. Gauge metering rod setting.
6. Adjust anti-percolator valve.
7. Adjust fast idle.
8. Adjust unloader.
9. Adjust lockout.
10. Set throttle lever adjusting screw.

CARBURETOR TOOLS - All Models.

Tune up kit J 819 D contains the following:

A. J 816-1 Low speed and pump jet wrench-3/16".
B. J 816-2 Discharge ball check and jet wrench-1/4".
C. J 816-4 Metering rod jet and float needle seat wrench-7/16".
D. J 816-6 Ball check plug jet wrench-11/32".
E. J 816-5 Handle for above 4 wrenches.

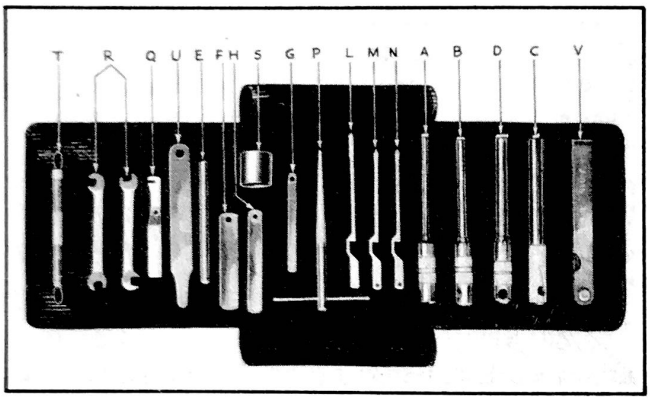

Figure 49
Engine Tune Up Kit J819D

F. J 818-1 Float level gauge-1/2".
G. J 819-B-1 Float level gauge-15/64".
H. J 818-2 Float level gauge-3/8".
J. J 818-7 Float level gauge-3/32".
L. J 509 Metering rod gauge-2.795".
M. J 510 Metering rod gauge-2.359".
N. J 1305 Metering rod gauge-2.280".
M. J 1265 Metering rod gauge-2.468".
P. J 508 Jet extractor.
Q. J 787 Spark plug and distributor arm bending tool.
R. J 460 Distributor contact point and contact arm adjusting wrench.
S. J 507 Accelerator pump plunger assembling sleeve.
T. J 882 A Spark plug gap (.032") and carburetor air valve gauge.
U. J 1062 Anti-Percolator valve adjusting gauge.
V. J 815 Feeler gauge set.

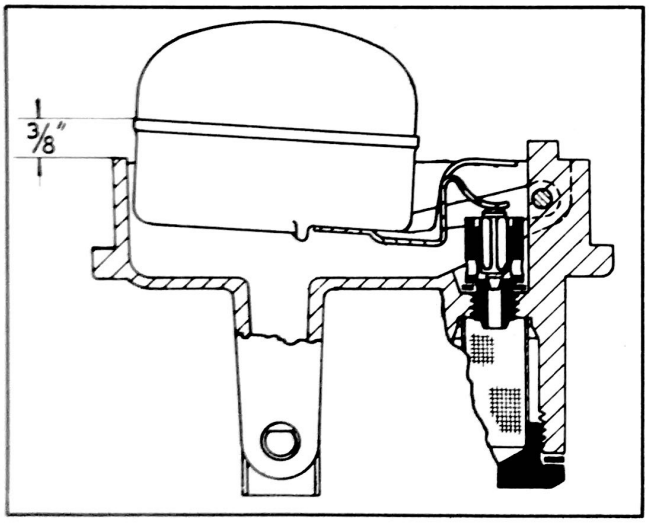

Figure 50
Float Level Adjustment Model 10, 18

FLOAT

FLOAT CIRCUIT OPERATION - All Models. Fig. 47 and 48 is the most important of all five circuits because it controls the height of the gasoline level in the bowl and also in the nozzle.

A gasoline level that is too high or too low will cause trouble in the other circuits and makes difficulties very hard to trace.

The float circuit consists of the fuel pump (gives a gasoline pressure); the needle valve and seat with its gasket, float, float bowl, float bowl cover with its gasket and vent hole.

The float bowl acts as a reservoir to hold a supply of gasoline throughout the entire range of the performance of the engine.

The level of the gasoline in the bowl is controlled by a combination of all of the above parts.

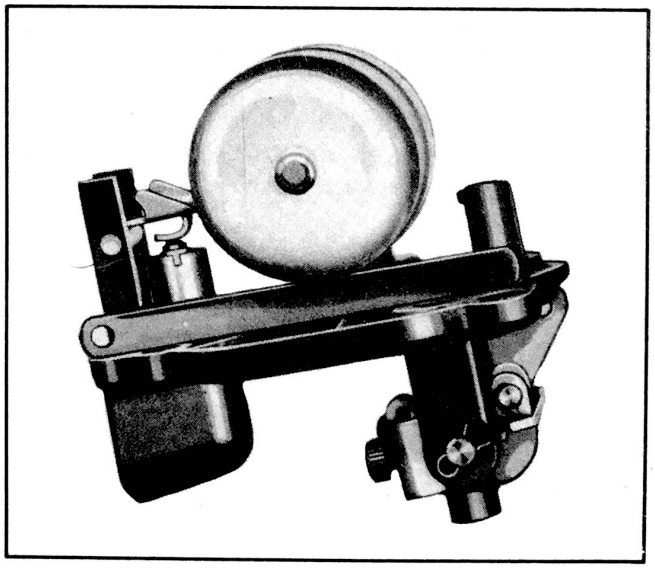

Figure 51 - Float Level Adjustment
Models 11, 12, 14, 15, 17

FLOAT LEVEL ADJUSTMENT - Model 10, 18. Invert the bowl cover. Gauge the vertical distance from the top of the machined surface of small projection on the bowl cover to the top of the soldered

the soldered seam at the front end of the float, see Fig. 50.

The correct setting is 3/8" with the needle seated. Use Gauge Number J 818-2 in Tune Up Kit J 819 D.

Adjustment is obtained by bending the lip on the float which contacts the needle.

Do not bend on the front of the float in adjusting it, as damage will result.

If the intake needle or seat show wear or damage, both must be replaced as they are supplied in matched sets.

If the holes in the float for the float pin are worn or out of round; if the float is loaded with gasoline then replace the float.

The float pin should be replaced if it shows wear.

The free end of the float should have a minimum drop of 1/2" with the bowl cover in its normal position. Adjustment can be made by bending two small float stop lips at the anchored end of the float.

FLOAT LEVEL ADJUSTMENT - Models 11, 12, 14, 15, 17.

The float circuit should always be checked whenever any carburetor work is being done because wear in the carburetor results in a raised float level.

Invert float chamber cover and gauge distance between top of cover (gasket removed) and bottom of float as shown in Fig. 51.

Be sure to gauge the float at both ends using tool J 818-7 which gives a setting of 3/32", see Fig. 51.

If it is necessary to make a change in the float level, press down with a screw driver on the brass lip of the float. Do not use pliers to bend this lip and bend only a small amount at a time.

If the float is loaded with gasoline or damaged and if the holes for the float pin are out of round then replace the float.

If the float lip is worn or has a ridge in it, smooth the rough spot by placing a strip of fine emery cloth between the finger tip and the lip of the float and draw the emery cloth through. Do not use a file. The contour of the float lip is very important for a smooth operation of the needle and should not be changed.

If the float pin or the hole in the float pin bracket is worn an erratic action of the float will result that will be similiar to the effect created by a high float level.

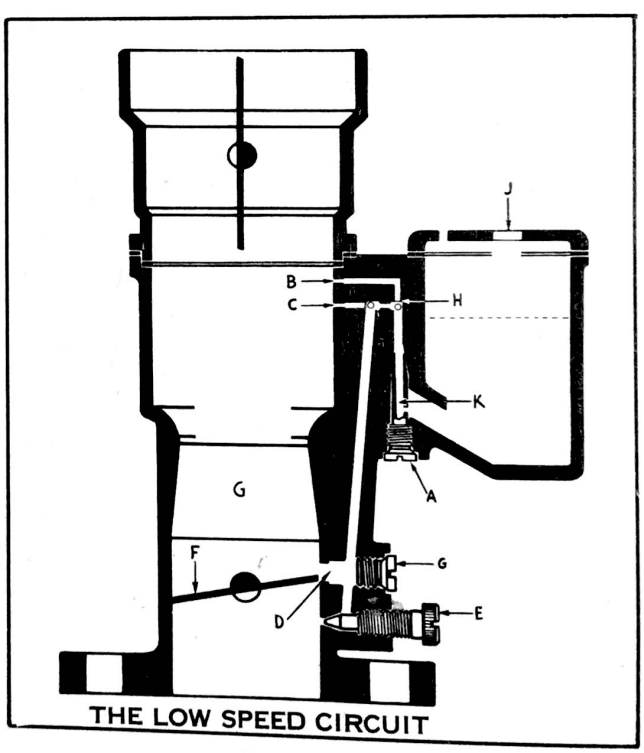

Figure 52
Low Speed Circuit Model 10, 18

LOW SPEED CIRCUIT

LOW SPEED CIRCUIT OPERATION - Model 10, 18. The idle and low speed circuit completely controls the supply of gasoline to the engine during idle and light load speeds up

to 20 miles per hour and it partly controls the supply for light load speeds between 20 and 30 miles per hour.

The idle and low speed circuit consists of the low speed jet, (A) Fig. 52, by-pass (B), air bleed (C), port opening (D), idle adjusting screw (E), throttle valve (F), carburetor throat (G), anti-percolator valve and economizer (H).

During idling and low speed operation of the engine, gasoline flows from the float bowl through the low speed jet to the point where it is combined with a stream of air coming in from the carburetor air inlet through the by-pass (B). The combining of the stream of air with the stream of gasoline tends to break up the gasoline into a vapor.

This mixture of air and gasoline continues on through the economizer (H) until it begins to pass the point where it is further combined with a stream of air coming in through the idle air bleed (C). This again tends to break the gasoline particles into a fine vapor.

The gasoline and air mixture that flows downward in the passage from the air bleed is still richer than the idle mixture needs to be but when it mixes with the air which has come past the throttle valve (F) it forms a combustible mixture of the right proportions for idle speed.

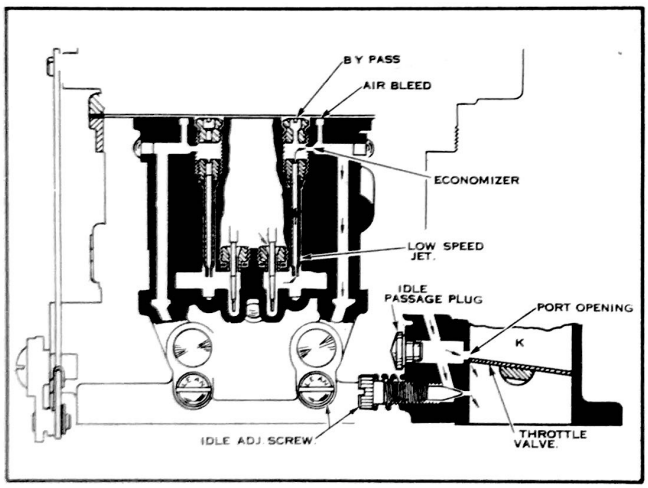

Figure 53 - Low Speed Circuit
Models 11, 12, 14, 15, 17

The idle port (D) is made in a slotted shape so that as the throttle valve (F) is opened it will not only allow more air to come in past it but will also uncover more of the idle port allowing a greater quantity of the gasoline and air mixture to enter the carburetor throat from the idle mixture passage.

The idle position of the throttle is such that at an idle speed of 600 R.P.M. it leaves enough of the slotted port as a reserve to cover the range in speed between idle and the time the high speed system begins to cut in.

Idling at 600 R.P.M. is equivalent to 7 1/2 to 8 miles per hour in high gear when the car is equipped with 4 1/9 to 1 axle or 6 1/2 to 7 M.P.H. with a 4 5/9 to 1 axle and 6 to 6 1/2 M.P.H. with 4 7/8 to 1 axle.

The idle adjusting screw (E) varies the quality of the idle mixture entering the carburetor throat (G). Backing out of the idle adjustment screw (E) makes the mixture richer.

The throttle lever adjusting screw regulates the idle speed by opening or closing the throttle valve and should be adjusted when the engine is warm to give the correct R.P.M. at curb idle.

All of the gasoline flowing from the float bowl during the idle period and at constant speeds up to 20 M.P.H. flows through the small metering hole in the low speed jet (A). This hole is held to a manufacturing tolerance of .00025" and is a very important factor in controlling the flow of gasoline into the engine during these speeds. It should never be cleaned out in any way other than with compressed air as a wire or drill tends to increase the size of the hole thereby changing the calibration of the carburetor.

Due to the small amount of gasoline in the well at the base of the low speed jet, the heat developed in the body of a downdraft carburetor (when the engine is stopped after a hard run in hot weather) tends to cause the gasoline to vaporize.

This develops a vapor pressure which would force the gasoline out of the nozzle into the carburetor throat and cause a flooded condition. The anti-percolator valve relieves this vapor pressure by opening the well to the atmosphere when the throttle is closed.

LOW SPEED CIRCUIT ADJUSTMENT - Models 11, 12,14,15,17, see Fig. 53. If the metering hole in the low speed jet is too large or too small (see Carburetor Specifications) or is clogged so that it cannot be cleaned with compressed air, then the jet should be replaced.

In cases of an unsteady idle, low gasoline economy, poor low speed performance, and if there is any question regarding the condition or delivery of the low speed jet then it should be replaced.

When a low speed jet is removed from a carburetor its copper gasket generally remains in the carburetor body. If this should drop out of the recess in the carburetor during reassembly and the jet be installed without the gasket, the jet will be screwed in too far. This will cause a further rolling action of the taper on the jet.

If the jet is installed without this gasket a gasoline leak will likely result at the seat of the jet and if the jet is then removed and replaced with a gasket there will be a space left between the up of the jet and the taper. This will allow gasoline to go into the idle passage past the outside tip of the jet without passing through the small metering hole in the side.

It is never advisable to remove the idle speed jet from one carburetor and install it in another as it is likely that the tip of the idle jet will not make a gasoline tight fit with the taper in the second carburetor.

If the metering hole in the side of the jet is too large because of improper cleaning or is clogged so that it cannot be cleaned with compressed air then the jet should be replaced.

AIR BLEED HOLES in the throat of the carburetor may become filled with a black carbon deposit which will restrict the air passage to the point that insufficient air will be supplied to mix with the gasoline before it reaches the idle port. These restricted air bleed holes will generally be indicated by having to screw the idle mixture adjusting screw closer in than the minimum limit. If the condition is bad a loping idle may continue even after the idle mixture adjusting screw is turned entirely in against the seat. The air bleed holes can be cleaned with wires or proper sized drills (see Carburetor Specifications).

IDLE MIXTURE PASSAGE can become restricted, however, this is very unusual. Such a condition is indicated by an unsteady idle and should be checked after all other remedies have failed to correct the condition. The passage can be cleaned by removing the aluminum plugs from the carburetor body and using a wire and compressed air.

IDLE PORT must be clean and not restricted, Unsatisfactory engine performance at low speeds is an indication that the idle port is damaged and a new casting must be installed. See Carburetor Specifications for idle port size.

IDLE ADJUSTING SCREW must have a smooth point and be free of burrs. The spring must have enough tension to hold the screw in place.

THROTTLE VALVE must not be installed upside down. The letter "C" in a circle is stamped on the face of the valve. The letter "C" should be on the side of the valve toward the idle port and facing the manifold, when installed.

To center the valve in the carburetor throat, first back out the throttle lever adjusting screw so that it does not contact its seat, then start the valve screws into the shaft. Hold the carburetor with

the air horn down and the valve seated tightly and tap the valve on the upper side. This will centralize the valve in the carburetor throat. Pressure should then be maintained until the screws are tightened.

A worn or bent valve should be replaced because of their effect on the port relation. The valves are made with the two opposite edges beveled so as to fit the carburetor throat when the valve is closed. Always make certain that the valve is not installed incorrectly as poor performance at low speeds will result.

THROTTLE SHAFT AND LEVER. A badly worn shaft will affect the port opening. A lever that is loose on the shaft will cause a slow idle at one time and fast at another. Replace the shaft and lever. Do not attempt tightening of a lever that is riveted to the shaft as damage to another part of the shaft usually results.

VALVE SCREWS are clinched over at the factory and it may be necessary to file the ends in order to remove them. Replace with new screws and it is not necessary to clinch them again.

CARBURETOR THROAT may become restricted with a carbon deposit which makes it necessary to open the throttle wider than the specified opening in order to obtain the proper idle speed. Opening of the throttle more than the specified amount in order to obtain a proper idle will uncover more of the slotted idle port than was intended in the calibration of the carburetor. This will result in an insufficient amount of the idle port being left as a reserve to cover the period between idle and 20 M.P.H. at which time the high speed system begins to cut in. A flat spot will be the result. Clean the carburetor throat by scraping or use an emery cloth.

IDLING

IDLE ADJUSTMENT - Models 10, 18. Set idle adjustment screw 3/4 to 1-1/2 turns open. Richer mixture is obtained by turning the screw out.

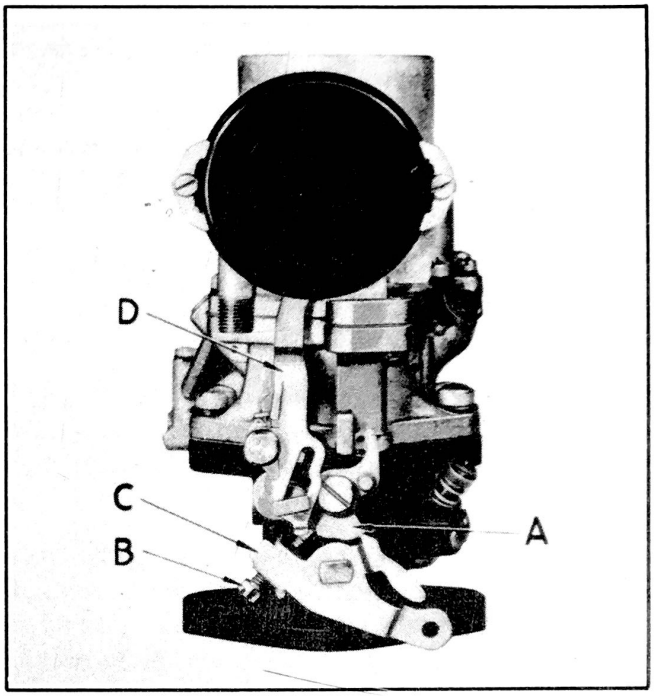

Figure 54
Fast Idle Adjustment Models 10, 18

Do not idle engine below 600 R.P.M. which is equivalent to 7 1/2 to 8 miles per hour in high gear when the car is equipped with 4 1/9 to 1 axle or 6 1/2 to 7 M.P.H. with 4 5/9 to 1 axle and 6 to 6 1/2 M.P.H. with 4 7/8 to 1 axle.

The idle port is .165" long and .032" wide.

The idle port opening is .122" above the valve with the valve closed tight.

The idle screw seat is Number 46 drill.

FAST IDLE OPERATION - All Models. During the warm up period it is desirable to run the engine at approximately 13 M.P.H. to keep it from stalling.

This is accomplished by having the fast idle cam come between the idle speed adjusting screw and its stop thus holding the throttle sufficiently open to give the necessary engine speed.

When the engine warms up sufficiently to run at the regular idle speed without stalling, the operation of the choke moves

the fast idle cam out from between the idle speed adjusting screw and its stop.

FAST IDLE ADJUSTMENT - Models 10, 18. Hold fast idle cam (A), Fig. 54, in normal position, tighten throttle lever adjusting screw (B) until it just seats against cam.

Hold throttle lever (C) closed and pull cam (A) back until first (or lower) step on cam is against (not on) set screw.

There should now be 5/8" clearance between the inside wall of the air horn and the lower edge of the choke valve.

Adjustment can be made by bending at the off set of the fast idle link (D).

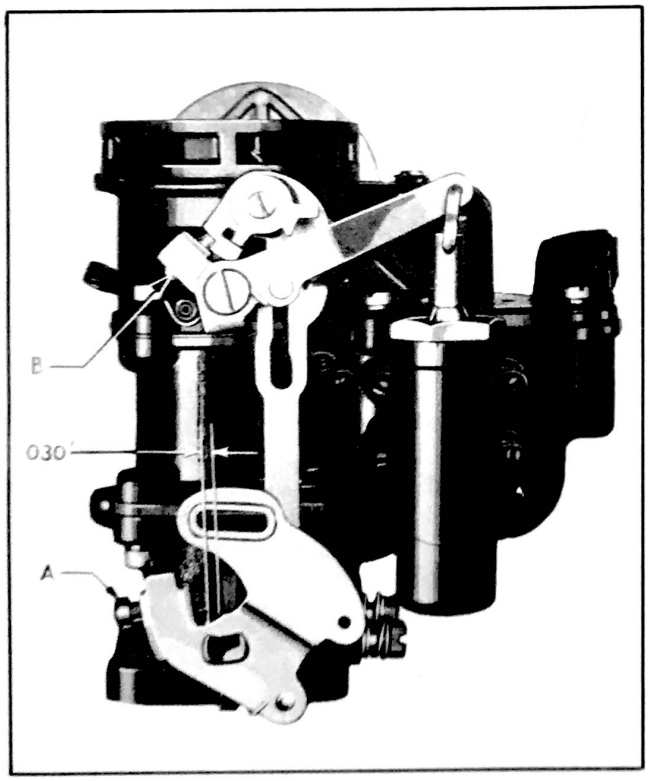

Figure 55 - Fast Idle Adjustment
Models 11, 12, 14, 15, 17
With Dash Pot

FAST IDLE ADJUSTMENT - Models 11, 12, 14,15,17. Set throttle stop screw (A) Fig. 55, for normal idle.

With choke valve closed, turn fast idle screw (B) with throttle stop screw held .030" from stop.

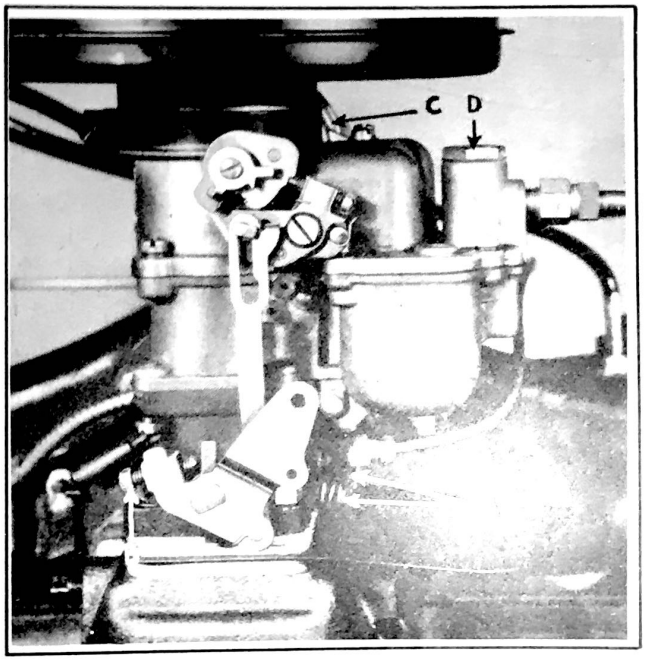

Figure 56 - Fast Idle Adjustment
Models 11, 12, 14, 15, 17
Without Dash Pot

HIGH SPEED CIRCUIT

HIGH SPEED CIRCUIT OPERATION - All Models. The intermediate speed and high speed circuit consists of the metering rod, metering rod jet, nozzle, throttle valve, throttle shaft arm, connector rod, pump arm assembly, and metering rod spring, see Fig. 57 and 58.

As the throttle is opened wide enough for a speed of a little more than 20 M.P.H. the velocity of the air flowing down through the carburetor throat creates a pressure slightly less than the atmospheric pressure at the tip of the main nozzle.

Since the gasoline in the float bowl is acted upon by atmospheric pressure, the difference in pressure between the two points causes gasoline to flow from the bowl through the metering jet and out the main nozzle into the throat of the carburetor.

As the speed increases from 20 M.P.H. the high speed system continues to cut in more and more and the idle or low speed system to cut out until at 30 M.P.H. the

high speed system is carrying the entire load and the idle system is inoperative.

At higher speeds the area of the opening between the jet and the metering rod governs the amount of gasoline going into the engine. At top speed the smallest section of the rod is in the jet.

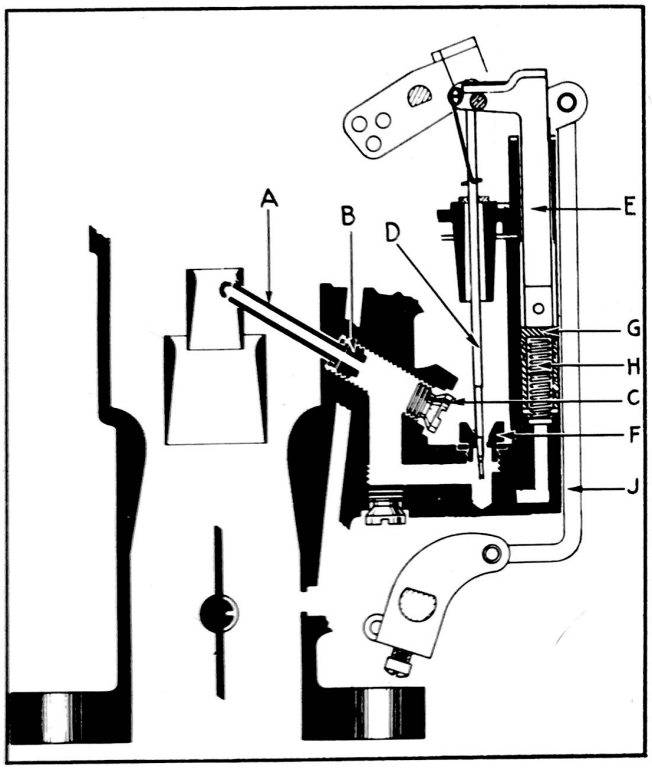

Figure 57 - High Speed Circuit
Models 10, 18

Engines operated at part throttle on a level road use a mixture of maximum leanness. The mixture for greatest power and acceleration is somewhat richer. These mixture qualities are obtained by the various size steps on the metering rod.

Under part throttle acceleration, the power mixture is required for a short time. This requirement of the power mixture always coincides with a drop in the manifold vacuum. The vacumeter carburetor meets this demand by allowing the drop in manifold vacuum to permit a spring to move the metering rod to the proper step and give the required richer mixture the instant it is necessary, independent of the throttle opening. As soon as the demand is passed as shown by the rise of the manifold vacuum, the metering rod moves down against the tongue attached to the pump arm and it is then controlled mechanically until another such demand arises.

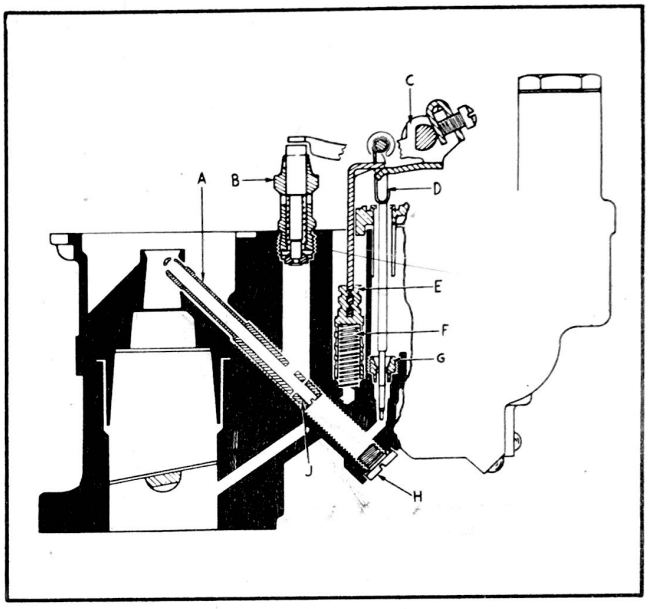

Figure 58 - High Speed Circuit
Models 11, 12, 14, 15, 17

The vacumeter control consists of a small piston beneath which is a spring fitted into a cylinder bored into the carburetor casting. The lower end of the bore has a drilled passage opening into the carburetor throat below the throttle valve. The vacuum acting upon the piston through this passage holds the piston down and compresses the spring as long as the vacuum is stronger than the spring. The spring under the piston is calibrated to force the piston up to a carefully determined point (not the top of the cylinder) when the manifold vacuum drops below 3" of mercury. This spring varies in length for different carburetors and the correct spring must be used and should never be altered. With the manifold vacuum above 3" of mercury the piston is pulled down until the arm on the piston link rests on the tongue attached to the pump arm. When the piston is down this tongue lifts the metering rod in direct ratio to the throttle opening without regard to the vacuum.

HIGH SPEED CIRCUIT CHECK - All Models

Poor engine performance above 20 M.P.H. can be caused by--

Restricted main nozzle.

Main nozzle hole too large at the end.

Main nozzle leaking at the seat and the result will be increased gasoline consumption above 20 M.P.H. or a loping idle and poor performance at all speeds.

Clean a restricted main nozzle with compressed air. See carburetor specifications and check the size of the jet. Try a new gasket at the base of the jet. If the nozzle cannot be cleaned; is not up to specifications at the hole; or a new gasket does not stop the fuel leak replace the main nozzle.

A restricted hole in the main nozzle will change the mixture throughout the entire range and such a nozzle should be replaced. A nozzle cannot be bright dipped or buffed to remove carbon without very possibly damaging it.

METERING RODS that are too large will result in flat spots upon light acceleration at any speed. If the linkage is adjusted so that the metering rod is lower in the jet than it should be then the stops of the metering rod will not be "timed" properly as they are raised out of the jet.

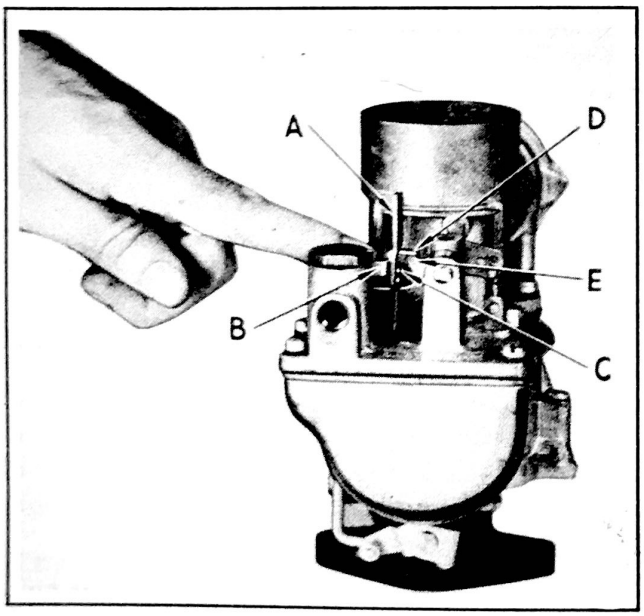

Figure 59
Metering Rod Setting Models 10, 18

If the metering rod is too rich (small) it will give poor gasoline economy at all speeds above 20 M.P.H.

If the metering rod linkage is adjusted too high it will affect the gasoline mileage at all speeds above 20 M.P.H. A change in the adjustment of a metering rod of 1/16" will definitely affect gasoline economy. If the metering rod is worn it will have the same effect upon gasoline economy as a metering rod that is too rich. A worn metering rod must be replaced. Measure the rod with a micrometer at different steps. Check with carburetor specifications. If it is worn the metering rod jet will also be worn and should be replaced.

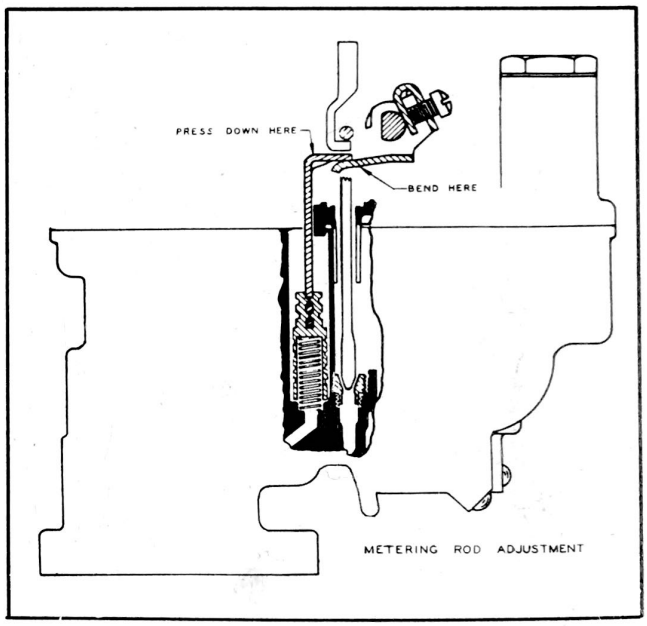

Figure 60
Carburetor Metering Rod Adjustment, Single Type, Used on Models 10, 18

METERING ROD

METERING ROD SETTING - Models 10, 18. Remove the metering rod and insert gauge J-1265 (2.468") (A) Fig. 59 and 60, in its place.

Turn out throttle valve screw, close throttle valve tightly. Press lightly on piston link (B) until metering rod pin rests in shoulder (C) of gauge.

Bend lip (D) of piston link so that there is less than .005" clearance between lip and pump arm (E).

METERING ROD SETTING - Models 11,12, 14,15,17. Remove one metering rod and insert gauge J-1305 (2.280") in its place, see Fig. 61.

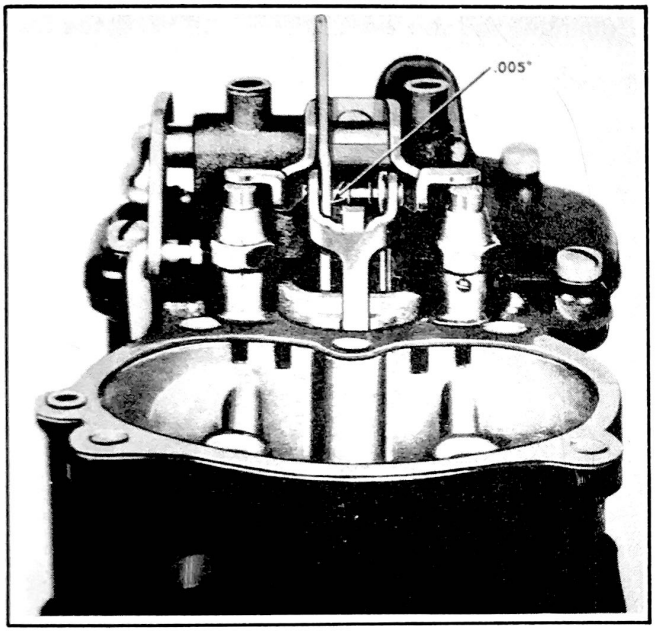

Figure 61 - Metering Rod Setting
Models 11, 12, 14, 15, 17

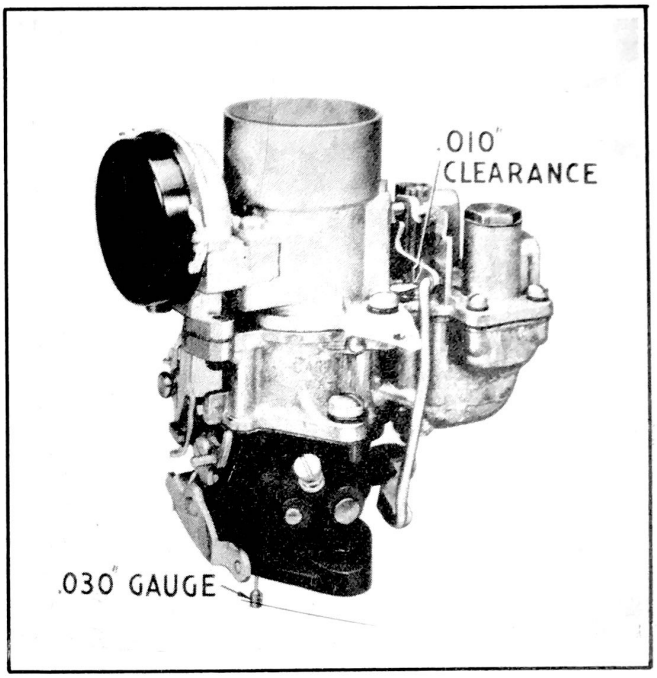

Figure 62
Anti-Percolator Valve Adjustment
Models 10, 18

Back out throttle screw. Press lightly on piston link until piston rests on bottom of cylinder. There should now be less than .005" clearance between metering rod pin and shoulder of notch in gauge.

Adjust by bending tongue on anti-percolator arm.

ANTI-PERCOLATING

Metering Rod Specifications .... (6 Cyl. Duplex - Carburetor)	Standard	- .061"	.061" to .057" x 3/16"	.047" x .147" x 1/64"
	1st Leaner	- .062"	.062" to .058" x 3/16"	.048" x .147" x 1/64"
	2nd Leaner	- .063"	.063" to .059" x 3/16"	.049" x .147" x 1/64"
	3rd.Leaner	- .064"	.064" to .060" x 3/16"	.050" x .147" x 1/64"
(8 Cyl. Duplex - Carburetor)	Standard	- .0625"	.0625" to .055" x .141"	.044" x .162" x 1/64"
	1st Leaner	- .0635"	.0635" to .056" x .141"	.045" x .162" x 1/64"
	2nd Leaner	- .0645"	.0645" to .057" x .141"	.046" x .162" x 1/64"
	3rd Leaner	- .0655"	.0655" to .058" x .141"	.047" x .162" x 1/64"
(6 Cyl. Single - Carburetor)	Standard	- .072"	.072" to .064" x 1/8"	.044" x 21/64" x 1/32"
	1st Leaner	- .074"	.074" to .066" x 1/8"	.046" x 21/64" x 1/32"
	2nd Leaner	- .076"	.076" to .068" x 1/8"	.048" x 21/64" x 1/32"
	3rd Leaner	- .078"	.078" to .070" x 1/8"	.050" x 21/64" x 1/32"

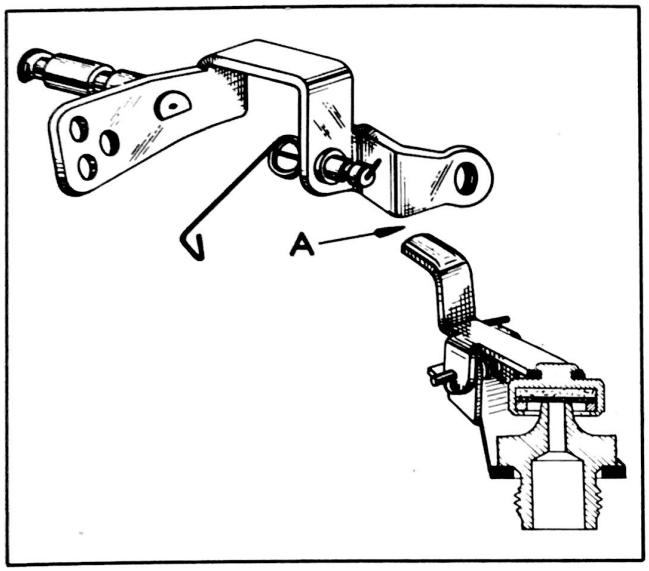

Figure 63 - Carburetor Anti-Percolator Setting, Single Type, Used on Models 10, 18

ANTI-PERCOLATING VALVE CLOSING - All Models. *If the anti-percolating valves do not close as soon as the throttle begins to open, the engine will receive a lean mixture and miss or stumble.*

An open anti-percolating valve, when gas begins flowing through the main nozzle, means that air will be drawn in and mixed with the gasoline.

This mixture will be delivered thru the main nozzle instead of liquid gasoline. This reduces the amount of gasoline entering the manifold and gives a lean mixture which appears to be a partial vapor lock.

ANTI-PERCOLATOR VALVE on Models 10 and 18. Insert a .030" diameter gauge between the lower edge of throttle valve and bore of carburetor (opposite port), see Fig. 62 and 63.

Adjust lip of rocker arm so that .010" clearance is obtained between lip and pump arm. (See Fig. 62 and 63).

The anti-percolator valve must close with only a slight throttle opening and seal the passage air tight. *An air leak at the valve will cause faulty acceleration and high speed performance.*

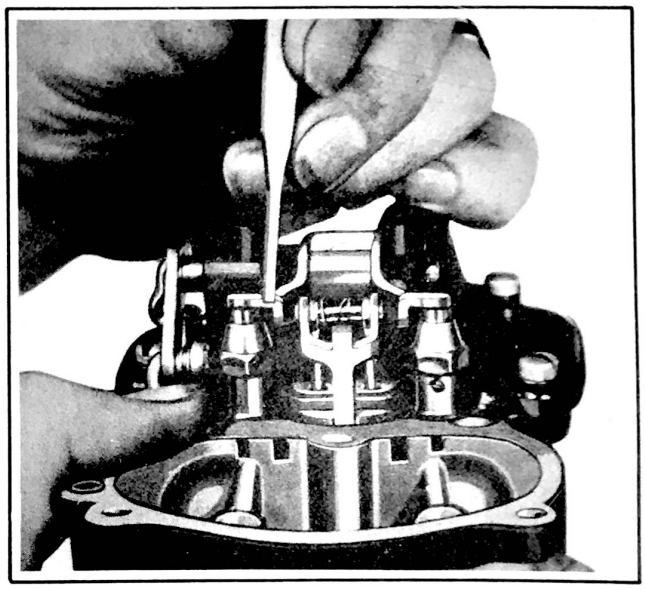

Figure 64 - Anti-Percolator Valve Models 11, 12, 14, 15, 17

ANTI-PERCOLATOR VALVES ADJUSTMENT - Models 11, 12, 14, 15, 17.

Back out throttle screw and close throttle.

Bend lips of anti-percolator arm until center of indicator lines on valves are just flush with top of plugs, see Fig. 64 and 65.

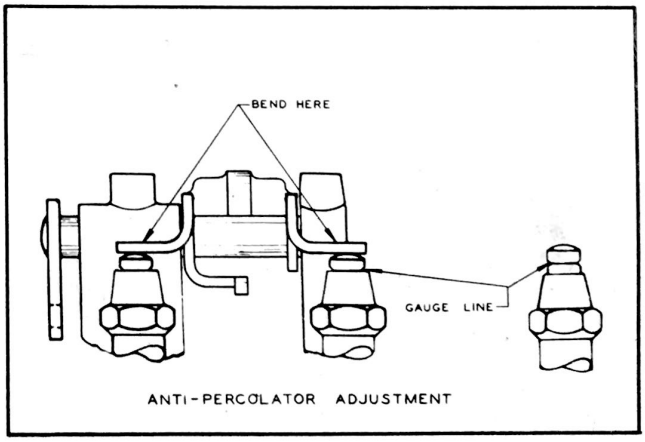

Figure 65 - Carburetor Anti-Percolator Setting, Duplex Type, Used on Models 11, 12, 14, 15, 17

PUMP CIRCUIT

PUMP OR ACCELERATION CIRCUIT OPERATION - Models 11,12,14,15,17, consists of the

pump cylinder (B), Fig. 66, pump plunger (C), intake valve (F), discharge valve (L), strainer screen (E), pump jet (J) and plunger spring (D) and external air bleed to the pump jet (K).

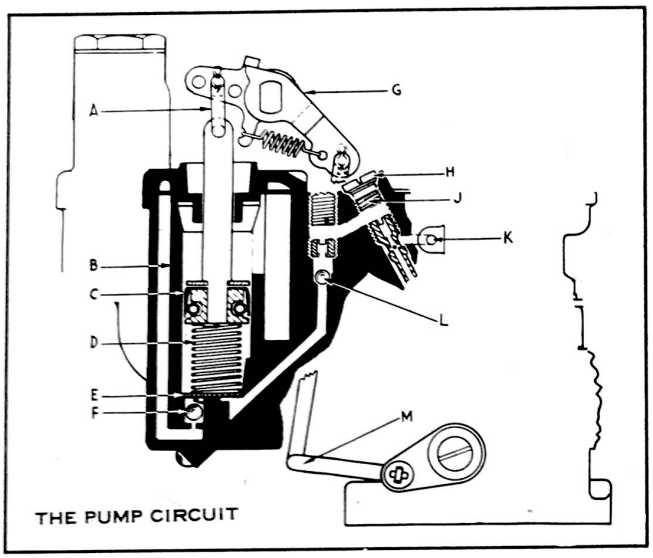

Figure 66

Pump Circuit-Duplex Carburetor Models 11, 12, 14, 15, 17

A. Pump connecting link
B. Pump cylinder
C. Pump plunger and rod assembly
D. Plunger spring
E. Strainer
F. Intake valve
G. Pump arm
H. Pump jet passage plug
J. Pump jet
K. Pump jet air bleed
L. Discharge valve
M. Throttle connector rod

When the pump plunger and leather are first installed in the pump cylinder, a small amount of air is trapped between the bottom of the piston and the top of the liquid gasoline. As the accelerator pedal is depressed, the pump plunger and leather are forced downward.

This compresses the air; forces the gasoline to leave the cylinder, closes the inlet valve, opens the outlet valve and discharges gasoline into the throat of the carburetor.

The discharge is prolonged since the hole in the tip of the accelerator jet is small enough to restrict the flow of fuel so long as it is being forced out by compressed air. The prolonging of the discharge gives the gasoline in the high speed system sufficient time to begin flowing fast enough to satisfy the demands of the engine.

As the accelerator pedal is allowed to return to its original position, the accelerating pump plunger is lifted upward by the link. This creates a partial vacuum in the cylinder which opens the inlet valve, closes the outlet valve, and draws in a charge of gasoline.

Since the outlet valve is below the liquid level of the carburetor, gasoline would be drawn into the throat of the carburetor through the pump jet from the accelerator system during fixed throttle intermediate speeds and high speeds, if it were not for the air bleed to the outside which breaks the vacuum on the pump jet.

SLOW CLOSING THROTTLE OPERATION (DUPLEX CARBURETOR ONLY).

NOTE: There are two types of Duplex carburetors used one of which has the slow closing throttle operation (Dashpot) as described below and the other carburetor is constructed and operates in the same manner but does not have the slow closing throttle device.

When driving at high speeds with a wide open throttle, it is frequently necessary to release the throttle suddenly because of an emergency. Such a condition could cause an immediate flooding of the engine because the charge of fuel that was started on its way to deliver power for a previous second's requirement is suddenly left inert and since the amount of fuel to keep the engine running is but a fraction of that required when the throttle was wide open.

A device, known as the slow closing throttle, is used to prevent stalling at that critical moment when the engine after having been called on to do its utmost and is given the fuel to do it, is denied the burst of power and left with the unused fuel.

This extra charge of fuel can be used up without flooding the engine or stalling

it and without uneven operation, if this excess fuel is given to the engine gradually. This is done by closing the throttle slowly and automatically for the last few degrees of its closing.

PUMP PISTON AND SPRING may be worn or may stick or the spring may have lost its tension. If this condition exists both the piston and the spring must be replaced, as the action of the pump will be affected.

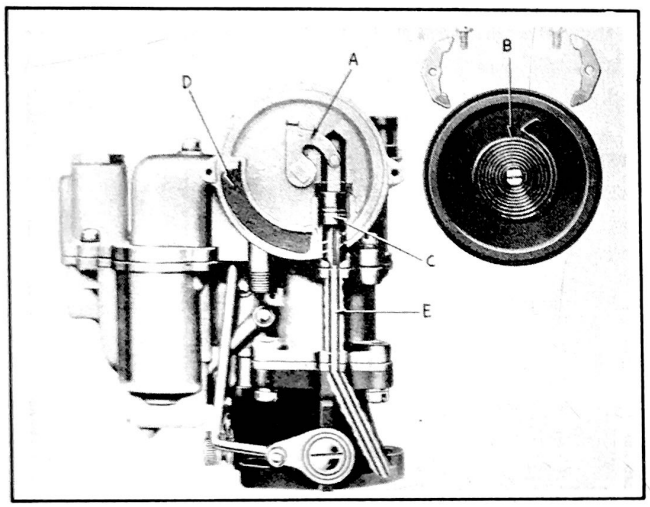

Figure 67 - Choke Circuit
Models 11, 12, 14, 15, 17

A. Choker shaft and lever
B. Thermostat coil
C. Choke piston
D. Air cleaner screen
E. Passage to intake manifold

PUMP INTAKE VALVE may be leaking. If the inlet valve leaks, a part of the discharge of the accelerating pump will be forced out through the valve back into the gasoline well of the carburetor causing an insufficient amount of gasoline to be discharged into the throat of the carburetor on acceleration. This valve cannot be cleaned, it must be replaced.

PUMP DISCHARGE VALVE may be leaking. If this valve leaks the air will be drawn into the pump cylinder on the upstroke of the pump plunger. This gives an insufficient charge of gasoline into the throat of the carburetor upon acceleration, causing a flat spot. The valve cannot be cleaned it must be replaced.

PUMP PLUNGER AND ROD ASSEMBLY. If the plunger leather leaks the charge of air in the pump cylinder will be lost. The entire assembly must be replaced.

PUMP JET AIR BLEED may be clogged with dirt or carbon and gasoline will be drawn thru the pump system during the high speed operation. The pump air bleed must be kept clean.

BALL CHECK STRAINER SCREEN may be restricted. A restriction of this screen will cause a small charge to be drawn into the pump cylinder and cause a flat spot. Replace the screen.

PUMP JET may be too large and cause the accelerating charge to pass out too fast giving too rich a mixture. This will cause a "stumble" on acceleration or sluggish action. Enlarged jets must be replaced. A loose jet on its seat will give the same effect.

PUMP LINKAGE improperly adjusted. If it is adjusted to give a heavy charge (long stroke) in hot weather then a flat spot will result because of too large a supply of gasoline. Worn pump linkage will cause the throttle valve to be opened by the accelerator pedal before the accelerating pump jet begins to discharge gasoline resulting in a flat spot. Replace all worn parts.

PUMP ADJUSTMENT - Models 10,18. Have throttle valve seated and connector link in place (short stroke which is the hole nearest the countershaft).

Pump plunger should travel 3/16" from the closed to the wide open position.

Adjustment should be made by bending the throttle connector rod at a lower angle.

The travel can be checked by marking a line across the pump plunger rod even

with the top of the cover in the closed and another in the wide open throttle position and measuring between the two marks.

PUMP ADJUSTMENT - Models 11,12,14, 15,17. With pump connector link in the long stroke and throttle adjustment screw backed out, the pump plunger should travel 9/32" from the closed to the wide open position.

Adjustment can be made by binding the throttle connector rod at a lower angle.

The travel can be checked by marking a line across the pump plunger rod even with the top of the cover in the closed and another in the wide open throttle position and measuring between the two marks.

CLIMATIC CONTROL

All Models

This device is used in place of the conventional choke control operated from the instrument panel, and will give the proper mixture ratios at all temperatures and at all speeds, relieving the driver of this important operation for the starting and driving of a cold engine.

CHOKE CIRCUIT OPERATION - All Models. The choke circuit is used only in starting and warming an engine and its purpose is to supply a rich mixture for starting.

The choker shaft and lever assembly (A) Fig. 67, choker valve and screws, and the automatic climatic control comprise the choke circuit group.

Climatic control is controlled by a thermostatic coil (B) which holds the choke piston (C) at the top of its travel and holds the choke valve completely closed when the engine is cold. This supplies the engine with a rich fuel mixture for starting.

When the engine starts the vacuum of the intake manifold acting on the choke piston and the unbalanced choke valve partly opens the choke valve until it takes the position where the tension of the thermostatic coil (B) is balanced by the pull of the vacuum on the piston (C) and valve. Slots in the sides of the choke piston cylinder allow the vacuum of the intake manifold to draw warm air from the exhaust manifold stove through a tube; through the choke air cleaner screen (D); past the thermostatic coil (B) and into the intake manifold through drilled passage (E).

This flow of warm air heats the thermostatic coil (B) and causes it to decrease its tension. The pull of the vacuum on the piston (C) working against a decreasing tension of the spring gradually opens the choke in such a way that it is fully open when the engine is warm enough to run on the regular idle mixture.

If the engine is accelerated during the warm up period the vacuum will drop off which it always does automatically with acceleration. This drop off in vacuum allows the thermostatic coil (B) to partly close the choke for a moment, thus providing the engine with a fuel mixture that is rich enough for acceleration.

The intake manifold vacuum drops to practically zero at low engine speeds with a wide open throttle. It would be possible for the choke to be closed by the thermostatic spring under such a condition thereby causing an excessively rich fuel mixture. To prevent this an arrangement is made in the choke linkage so that on all wide open throttle operations the choke is held partly open.

CHOKE AIR CLEANER SCREEN (D) Fig. 67, may be clogged and this will restrict the flow of warm air from the manifold stove and will cause a slow opening of the choke. If badly clogged, the choke will not fully open at the regular idling speed and temperature causing a loping idle. A clogged screen must be washed thoroughly in gasoline and blown outwith

compressed air. A damaged screen should be replaced. *This screen should be cleaned every 5,000 miles.*

CHOKE COVER CORK GASKETS may be shrunk or broken. In either case the gaskets will allow cold air to enter the cover thereby slowing up the opening action of the choke with the same results as a clogged air cleaner section.

CHOKE VALVE sticking may be caused by a bent shaft, an improperly installed choke valve, or a warped air horn. A warped air horn may be caused by clamping the air cleaner to the horn too tightly. If the choke valve sticks open it will result in hard starting. *If it sticks closed or partly closed it may result in hard starting* and will undoubtedly cause poor gasoline economy and affect all engine performance. Sticking parts should be freed and damaged parts replaced.

CHOKE LINKAGE may be sticking, bent or improperly adjusted all of which will result in the same conditions as described under "Choke Valve" above. The correction is freeing up, replacing, or adjusting properly. Linkage should be free to fall of its own weight.

CHOKE PISTON. On rare cases sufficient grit may get by the choke air cleaner screen (D) to cause the piston (C) to be slow in its action or become entirely stuck. In either case the result will be the same as the condition described under "Choke Valve" above. If the piston and cylinder cannot be cleaned properly or if they are worn they should be replaced.

THERMOSTATIC COIL (B) should never be removed from the cover. If damaged replace the entire cover.

CLIMATIC CONTROL DISASSEMBLING - Models 11,12,14,15,17. Remove two attaching screws and retainers holding thermostat coil and housing assembly.

Remove screw holding choker trip lever, washer and fast idle cam and collar assembly.

Remove two choke screws and choke valve.

Turn choke lever assembly until piston is free from cylinder and remove assembled parts. Do not lose piston pin.

Remove piston housing strainer.

CLIMATIC CONTROL DISASSEMBLING - Models 10,18. Remove two attaching screws and retainers holding the thermostat coil and housing assembly.

Remove set screw holding choke lever and link assembly to choke piston link and shaft assembly.

Remove two choke screws and choke valve.

Turn choke lever assembly until the piston is free from the cylinder and remove assembled parts. Do not lose the piston pin.

Remove the piston housing strainer.

CLIMATIC CONTROL REASSEMBLING - Models 11,12,14,15,17. Wash all parts, except coil and housing assembly in clean gasoline. Then blow through all passages with compressed air. Remove all foreign substances from air horn and parts to allow all parts to work freely. Replace all worn or damaged parts with new. Then proceed as follows:

Install choke lever assembly and piston.

Install choke valve, using new screws. Make certain valve does not bind or rub on inside of air horn bore. Tighten screws securely. Valve should fall open of its own weight after installation.

Install fast idle cam and collar assembly, washer and choker trip lever. Tighten screw.

Install piston housing strainer.

Install thermostatic coil and housing assembly with notch at bottom. Insert attaching screws and retainers part way and then turn housing counter clockwise until notch is in line with center mark on piston housing. Then tighten screws. Instruction for leaner or richer setting is stamped on housing. The position of choke valve will be governed by existing temperature. On a warm day choke valve might be open slightly. On a cold day choke valve is completely closed.

CLIMATIC CONTROL REASSEMBLING - Models 10,18. Install choke piston link and shaft assembly to the carburetor and thru the link of the choke lever and link assembly.

Install choke valve using new screws. Make certain the valve does not bind or rub on inside of air horn bore. Tighten screws securely. The valve should open of its own weight after installation.

Tighten screw in link of the choke lever and link assembly.

Install piston housing strainer.

Install thermostatic coil and housing assembly with notch at the bottom. Insert attaching screws and retainers part way and then turn housing counterclockwise until notch is in line with the center mark on the piston housing. Then tighten screws. Instruction for leaner or richer setting is stamped on housing. *The position of the choke valve will be governed by existing temperature. On a warm day the choke valve might be opened slightly. On a cold day the valve is completely closed.*

Wash all parts except coil and housing assembly as given under reassembling Models 11,12,14,15,17.

CLIMATIC CONTROL CAUTIONS - All Models. Check choke valve to make certain it is in perfect alignment with air horn bore. If it is not, choke will stick in its closed position and will have a tendency to drag on air horn throughout its range.

When reassembling carburetor to engine, make certain flexible tubing is properly connected. An air leak at this point will prevent climatic control from functioning properly.

CLIMATIC CONTROL ADJUSTMENTS - All Models. For average driving and climatic conditions, the center index mark on coil-housing should be set at index.

The climatic control is adjusted at the factory to close the choker valve lightly on its seat.

Action of climatic control during warm up period is affected by grade of fuel used.

Make no adjustment until engine is cold.

If a cold engine shows a tendency to run rich during the warm-up period, revolve the choke housing clockwise one mark at a time to lean it out, until the desired results are secured.

These adjustments should be made with care, and between adjustments the engine must be thoroughly cooled off. At least four hours should be used to cool the engine.

UNLOADER OPERATION

All Models

There are occasions during the starting of the engine when it can and would become flooded with too much fuel if it were not for this unloader device.

To clean out an engine that has been flooded it is necessary to hold the choke open sufficiently to allow the engine to clear out the excessive fuel from the intake manifold.

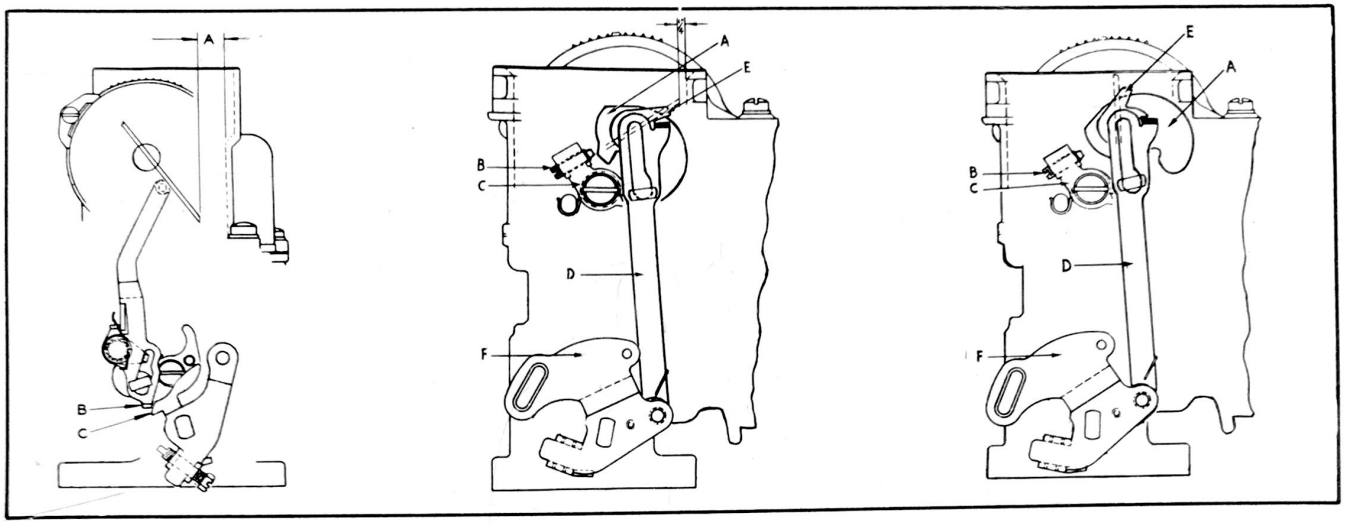

Figure 68
Unloader Setting Models 10, 18

Figure 69 - Unloader Setting
(Dash Pot Type of Carburetor)
Models 11, 12, 14, 15, 17

A. Fast idle cam
B. Fast idle adjustment screw
C. Dash pot arm
D. Fast idle connector link
E. Choker-trip lever
F. Throttle shaft and lever assembly

Figure 70 - Lockout of Choker Valve
(Dash Pot Type of Carburetor)
Models 11, 12, 14, 15, 17

A. Fast idle cam
B. Fast idle adjustment screw
C. Dash pot arm
D. Fast idle connector link
E. Choker trip lever
F. Throttle shaft and lever assembly

The throttle lever and choke linkage are so arranged that the depressing of the accelerator pedal to the floor board forces the choke open sufficiently to allow the engine to clean out the intake manifold.

UNLOADER ADJUSTMENT - Models 10, 18. There should be 7/16" clearance at (A) Fig. 68, between the lower edge of the choke valve and the inner wall of the air horn with the throttle valve wide open.

Adjustment can be made by bending the cam at (C) on the throttle lever.

UNLOADER ADJUSTMENT - Models 11,12,14. 15,17 for either type of Duplex carburetor (with or without dash pot). With the throttle wide open the distance between the upper edge of the choke valve and the inner wall of the air horn should be 1/4", see Fig. 69.

Adjustment can be made by bending the lip on the fast idle connector link (D). With the throttle wide open push the choker valve open.

The choke should lock in its wide open position. If it does not lock recheck the unloader adjustment.

Closing of the throttle will release the choker valve. The choker trip lever (E) is notched out for this setting.

LOCKOUT

LOCKOUT ADJUSTMENT - Models 10,18. The choke should lock in the wide open position with the throttle and choke valves wide open.

Adjustment can be made by bending the lip at the lower end of the fast idle link to give 1/32" clearance between the lip (B) Fig. 68, and the throttle lever lock (C). Throttle and choke valves wide open. Use tool J 787 for bending.

LOCKOUT OPERATION - Models 11,12,14, 15,17 for either type of Duplex carburetor (with or without dash pot). When the throttle is wide open the choke valve is held in a wide open position by the lockout to prevent the accidental closing of the choker valve which would flood the engine.

With the lip on the link (D) Fig. 70, already bent for the correct unloader setting the same lip should lock the choker valve in a wide open position.

CARBURETOR DIFFICULTIES AND REMEDIES

A carburetor may load up after considerable service and if it does the float level should be checked.

Wear on the lip of the float lever will raise the float level.

The float level may be reset by bending the lip of the float lever down so as to raise the float level or bending the lever up to lower the float level.

A very slight bend is all that is necessary.

An engine may stall while idling and if it does the throttle adjusting screw and the idle adjustment screw must be reset according to instructions on page 50.

If these adjustments do not correct the stalling of the engine then remove the low speed jet and clean it thoroughly with compressed air.

See that the low speed jet seats gasoline tight at the shoulder. If not replace the jet with one of the same specifications.

A low speed jet should never be changed from one carburetor to another.

An increasing resistance on the foot throttle is caused by a clogged pump jet.

The pump jet should be removed and cleaned with compressed air which usually will remove the dirt or lint. It is usually advisable to replace the pump jet.

All jets and ball checks should be inspected to see that they are gasoline tight when seated.

POOR ACCELERATION is usually caused by:

Accelerating pump plunger leather worn or damaged.
Accelerating pump plunger is loose.
Accelerating pump cylinder has corrosion or sediment in it.
Accelerating pump arm bent.

Pump arm has three holes for seasonal or altitude adjustment. Set to the longest stroke (upper hole) for cold weather; medium stroke (lower hole) for moderate weather; short stroke for hot weather driving.

ACCELERATION HAS "FLAT SPOT". The first place to check is the accelerating passages, valves and plunger and then the anti-percolating device.

RICH MIXTURE AT IDLING is obtained at idling speed, with the idle adjusting screw set according to instruction, any one of the following conditions might cause the rich mixture:

Worn or damaged idle adjusting screw or seat.
Leak around the upper or lower seat of the idle jet.
Worn or damaged metering hole in the idle jet.
Leak at the main nozzle gasket.
High float level.
Float valve leaking.

IMPROVE GAS MILEAGE ABOVE 30 M.P.H. All gasoline is supplied through the main nozzle for speeds above 30 M.P.H. and if poor gasoline mileage is obtained above this 30 M.P.H. the following points should be checked.

Main nozzle gasket for leak.
Metering pin for position and condition.
Main jet for wear.
Float level.
Float valve.
Accelerator pump stroke.

CARBURETOR JETS AND PASSAGE ACTION. The following jets and passages in the carburetor are used to supply gasoline during engine idling.

Main jet.	Idle passage.
Idle jet.	Idle ports.

The following jets and passages are used to supply gasoline during the moderate and high car speeds.

Main jet and all passages connecting to the main nozzle and the main nozzle itself.

During acceleration the accelerating pump, passages and accelerating jets supply additional gasoline.

The following jets are used for a cold start:

Main jet and all passages connected to the main nozzle and the main nozzle itself.

And in addition the choke is closed thus preventing air under atmospheric pressure from entering the air horn so that the vacuum from the manifold extends up to the choke valve. This means that an equal pressure or vacuum exists both at the idle air intake ports and the idle delivery ports so no flow is caused through the idle passages. The vacuum existing at the main nozzle causes flow in the high speed system to supply gasoline for starting.

GOVERNOR

CARBURETOR GOVERNOR - All Models. All new cars are equipped with a speed governor installed between the carburetor body flange and intake manifold to prevent high speed driving during the breaking-in period.

This governor is sealed by the HUDSON factory at the time of installation.

The governor will restrict acceleration as well as high speed operation and will slightly increase the carburetor air intake noise.

The governor is removed by the HUDSON Dealer at the time of the 500 mile new car inspection.

AIRCLEANER

STANDARD AIR CLEANER for All Models should be cleaned at least every 2000 miles and more often if the car has been operated in dusty territories.

Remove the wing nut and lift off the cover.

Wash the filter unit in gasoline and dry.

Re-oil the filter unit by dipping in engine oil of the same grade as is being used in the engine. Allow all excess oil to drip off.

The filter unit should be replaced after extensive use.

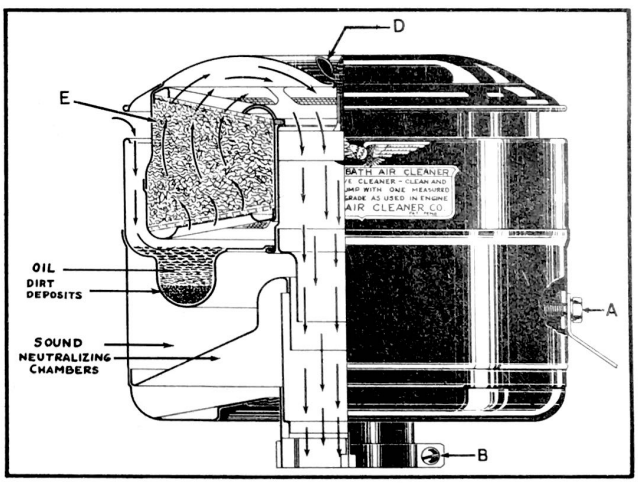

Figure 71 - Air Cleaner-Oil Bath Type

OIL BATH AIR CLEANER AND SILENCER is optional equipment all models. In extremely dusty territories it is advisable to use the heavy duty Oil Bath Air Cleaner and Silencer.

This is a combination silencer and heavy duty, self washing type of air cleaner. Its efficiency in removing dust particles from the air passing into the carburetor is exceptionally high.

Dusty air enters the cleaner through passages at the top and passes down and

over the surface of an oil reservoir so that the dust in the air is trapped by the oil before the air reaches the filter element.

Clean this oil bath air cleaner according to the dust conditions under which the car is operated.

Remove the brace screw (A), Figure 71, and loosen the clamp screw (B). Remove the wing nut (D).

Lift the filter element (E) out of the body and wash in kerosene and dry it.

Remove the oil from the cleaner body and wash thoroughly both inside and outside with kerosene.

Refill reservoir with one pint of engine oil the same grade as used in the engine.

Reinstall the filter unit, cover and wing nut.

Reinstall the air cleaner unit on the carburetor, tighten the clamp screw and install the brace.

FUEL PUMP

Fuel alone or combination fuel and vacuum pumps used are manufactured by the A.C. Spark Plug Co., Flint, Michigan. The types used are:

Models	Type Used	Illustration
10,18 Pass	AF with inverted bowl	Fig. 72
11,12,14, 15,17,18 Com'l.	AP with appended bowl	Fig. 73
10,11, 12,18	AJ combination Fuel and Vacuum-optional equipment	Fig. 78
14,15,17	AJ combination Fuel and Vacuum-optional equipment (same as above except for position of outlet)	Fig. 78

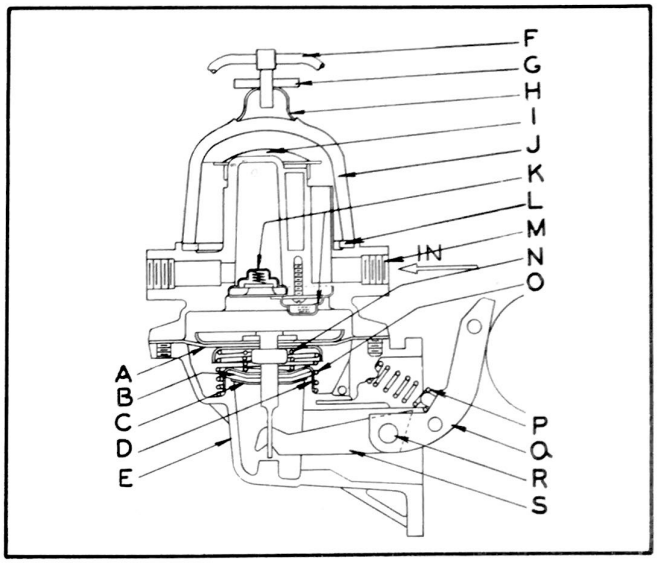

Figure 72
Fuel Pump - Models 10 17

A. Pull rod and diaphragm	I. Screen
B. Oil seal washers	J. Bowl
C. Oil seal retainer--lower	K. Valve and cage assembly
D. Oil seal retainer--upper	L. Bowl gasket
E. Body	M. Cover
F. Bail and screw assembly	N. Oil seat spring
G. Bail thumb nut	O. Diaphragm spring
H. Bowl seat	P. Rocker arm spring
	Q. Rocker arm
	R. Rocker arm pin
	S. Link

FUEL PUMP, Models 10 and 18 Pass. is an inverted bowl pump illustrated in Fig. 72. The oil seal on the pull rod consists of an upper retainer with a flange at its lower end (which serves as a lower seat for the driving spring); two leather oil seal washers; and a lower retainer. The entire assembly is locked in place on the pull rod stem by the shoulder on the lower end of the pull rod and rests on the pump boss in the pump body.

FUEL PUMP DIAPHRAGM AND OIL SEAL REMOVING. Model 10, 18 Pass. always mark the position of the cover on the body before removing the cover. Remove cover or upper body.

Remove rocker arm pin in order to free the pull rod from the rocker arm linkage.

Invert the pump body, in order to remove the diaphragm, and force the edge of a screw driver under the edge or flange of the upper oil seal retainer. Pry on the screw driver to move the flange on the retainer up and onto the top edge of the pump boss.

Hold the pump link against the upper stop by wedging a screw driver between the link and the bottom of the pump body, push down on diaphragm and away from end of link. This will unhook the pull rod from the link and diaphragm assembly can then be removed.

Diaphragm assembly should be replaced as a unit (see directions below for assembly of oil seal on pull rod).

FUEL PUMP OIL SEAL ASSEMBLING ON THE DIAPHRAGM, Models 10, 18 Pass. Place diaphragm driving spring in position on pull rod against lower diaphragm protector, place upper oil seal retainer in position on lower end of driving spring with cupped portion within spring, compress spring by pressing on oil seal retainer until retainer is below shoulder on pull rod, then rotate retainer 1/4 turn so that it is locked in place.

Force two leather oil seal washers down on pull rod stem until they rest against upper retainer, assemble lower retainer below washers and lock in place by rotating 1/4 turn.

The complete assembly is then ready to be installed in the pump.

FUEL PUMP DIAPHRAGM ASSEMBLING, Models 10, 18 Pass. Invert the pump body, hold link against upper stop by wedging screw driver between link and bottom of pump body, tilting assembly so that flange on upper oil seal retainer rests on top edge of pump boss and pull rod clears end of link (see Fig. 72).

Remove rocker arm pin in order to free the pull rod from the rocker arm linkage diaphragm back into vertical position and center in pump body so that oil seal retainer snaps into place around pump boss.

The upper pump body can then be put in place and the screws installed.

FUEL PUMP - Models 11,12,14,15,17,18, Comm. The rotation of the camshaft eccentric actuates the rocker arm which is pivoted and in turn pulls the pull rod and diaphragm assembly downward against the diaphragm spring, thus creating a vacuum in the pump chamber, see Fig. 73.

Fuel from the tank enters through the inlet into the sediment bowl and then through the strainer and the suction valve into the pump chamber. On the return stroke, the spring pressure pushes the diaphragm upward forcing fuel from the pump chamber through the pressure valve and outlet to the carburetor.

When the carburetor bowl is filled the float in the float chamber will shut off the inlet needle valve thus creating a pressure in the pump chamber. This pressure holds the diaphragm downward against the spring pressure where it remains inoperative until the carburetor requires further fuel and the needle valve opens.

The rocker arm spring is merely for the purpose of keeping the rocker arm in constant contact with the eccentric so as to eliminate noise.

FUEL PUMP DIAPHRAGM REMOVING - Models 11,12,14,15,17,18 Com'l.

Mount the pump in a vise or on a test stand.

Mark the cover and body so that they can be put back exactly where they were originally and remove the cover.

Remove the nut on the end of the pull rod; remove lock washer, alignment washer, upper diaphragm protector cup and the diaphragm.

FUEL PUMP DIAPHRAGM AND PULL ROD ASSEMBLY, Models 11,12,14,15,17,18 Com'l., requires placing the diaphragm (driving) spring in place in the pump body.

Position diaphragm assembly on the driving spring so that the spring is centered in the lower diaphragm protector.

Press downward on the diaphragm and turn to the left at the same time so that the pull rod engages the end of the rocker link.

Turn the diaphragm assembly a quarter turn to the left so that the holes in the diaphragm and pump body line up.

Push in on the rocker arm until the diaphragm is flush with the pump body flange.

Place the top assembly in exactly the same position as it was when removed (shown by marks placed on the pump and cover that were placed before disassembling). Install the cover screws with lockwashers and turn down the screws loosely.

Release the rocker arm which will flex the diaphragm in the extreme upper position.

Tighten the cover screws, alternately and securely.

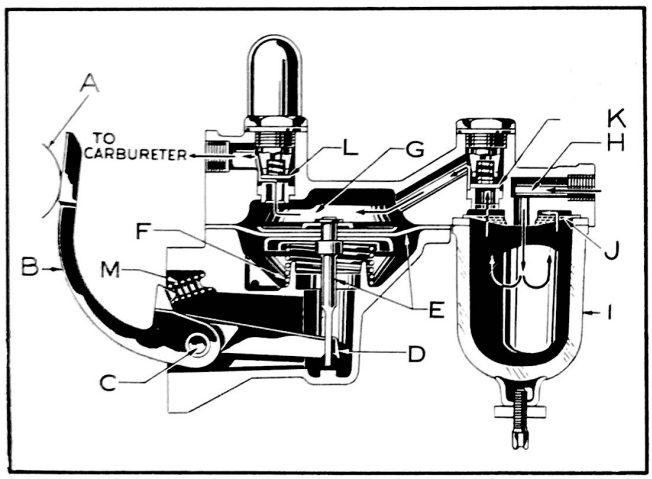

Figure 73 - Fuel Pump
Models 11, 12, 14, 15, 17, 18 Com'l

A. Camshaft eccentric
B. Rocker arm
C. Rocker arm pin
D. Link
E. Pull rod and diaphragm
F. Diaphragm spring
G. Pump chamber
H. Inlet
I. Sediment bowl
J. Strainer
K. Suction valve
L. Pressure valve
M. Rocker arm spring

FUEL PUMP VALVES AND COVER ASSEMBLING BEFORE INSTALLING ON THE PUMP. Place outlet valve spring retainer in cover, being careful not to distort legs of retainer, place valve plate gasket in position, install outlet valve spring in retainer, place outlet valve on spring.

Place inlet valve on its seat, position valve spring on center of inlet valve, install inlet valve retainer in valve plate and see that shoulder of retainer fits flush in depression in plate.

Install valve plate in position in cover and insert three mounting screws.

See that inlet valve is centered in spring seat and outlet valve centered on valve seat in valve plate.

Install strainer screen on top of cover, see that screen fits properly around inlet and at edges of cover.

Place cork gasket in cover, install cover plate.

Install fibre gasket on cover plate capscrew, tighten capscrew so that cover plate is secure and tight.

See that gasket seats properly and that filter screen is not distorted.

Cover assembly is then ready to install on pump body.

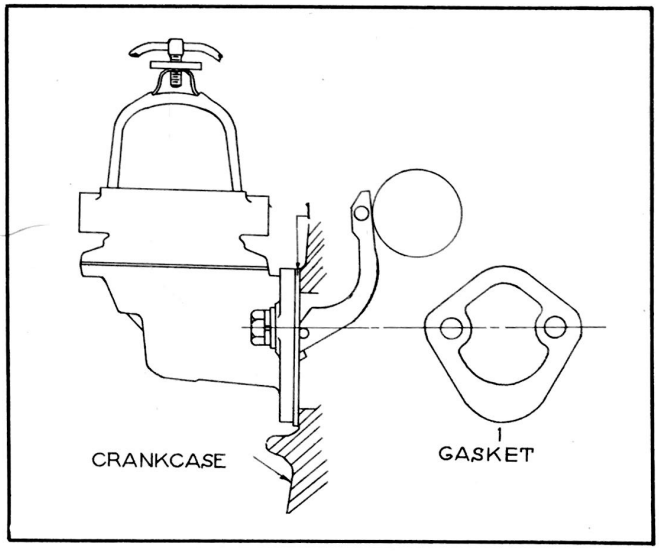

Figure 74 - Installing Fuel Pump
Models 10, 18 Pass.

FUEL PUMP ROCKER ARM AND LINKAGE, REMOVING. Rocker arm linkage will ordinarily not require disassembly when servicing pump.

If rocker arm has been removed, assemble link, rocker arm, and rocker arm spring in pump body in proper position (see illustration).

Insert rocker arm pin through hole in body so that it engages rocker arm and link.

Stake pin in place by using punch to turn body metal over pin at each end.

See that rocker arm operates freely after assembly (if arm binds, drive pin back slightly).

FUEL PUMP DIAPHRAGM REPLACEMENT.

Assemble pull rod gasket and lower diaphragm protector cup with cup portion down, on the pull rod. Gasket must be seated against the shoulder on the pull rod.

Place four layers of diaphragm material on the pull rod and carefully line up holes. Use a special locating ring or several cover plate screws.

Install upper diaphragm protector cup on the pull rod with cup portion up. Place hexagon alignment washer on the diaphragm protector and assemble lock washer and pull rod nut.

Use a special wrench to hold the alignment washer from turning while the nut is being tightened and keep the diaphragm holes lined up with the locating ring or several of the cover screws until the nut is tight.

NOTE: The keeping of the diaphragm holes lined up is very important.

Install pump cover and insert the cover screws but do not tighten.

Insert alignment wrench in the hole in the pump body and force the pull rod and the diaphragm assembly to the extreme upper position and hold in this position while the cover screws are evenly and alternately tightened (to obtain correct alignment of the pump cover).

Test diaphragm assembly by installing a precision gauge in the outlet valve port so that the gauge rod rests on the upper diaphragm protector cup. If the diaphragm is correctly installed and in the extreme upper position the notch in the gauge rod should be visible at the top of the gauge.

FUEL PUMP INSTALLATION on Model 10, 18 Pass. is shown in Fig. 78. The gasket is 1/16" in thickness.

FUEL PUMP INSTALLATION on Models 11, 12,14,15,17 and 18 Com'l. is shown in Fig. 79.

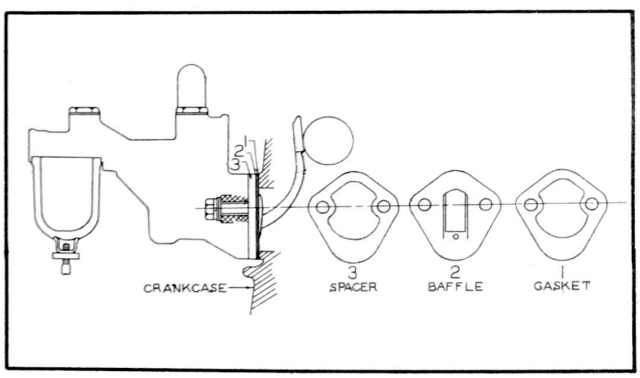

Figure 75 - Installing Fuel Pump
Models 11, 12, 14, 15, 17 and 18 Comm.

The Oil Baffle is of steel and is installed as shown. The gasket is of rubber and asbestos combination .015" thick. The spacer is of steel and asbestos and is .275" thick (compresses to .250" when installed). The spacer is the same as the one used on the combination fuel and vacuum pump used on Models 10,11,13,18 except for thickness. Do not use either one in the place of the other. The sleeve is of Bakelite and 25/32" long. The insulating washer is a 1/16" thick Bakelite washer.

FUEL PUMP TO MANIFOLD CONNECTIONS should be made as shown in Fig. 76. Be sure

connections are tight, but avoid too much tension so as to prevent stripping threads.

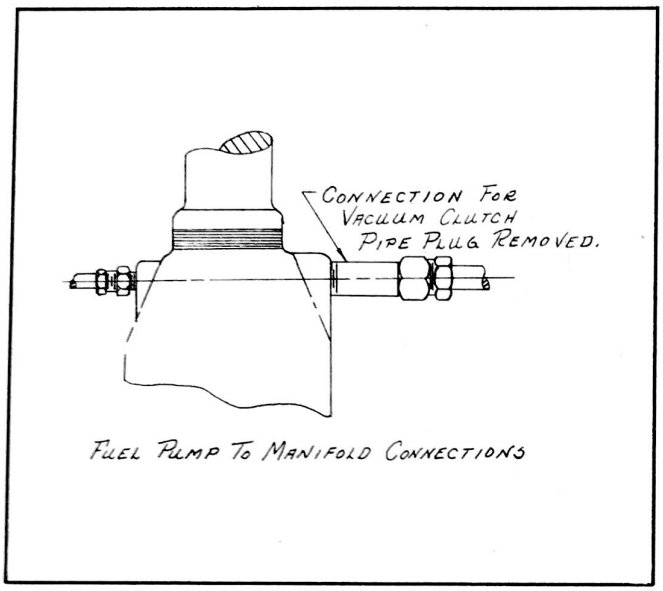

Figure 76 - Fuel Pump to Manifold Connections - All Models

FUEL PUMP TROUBLE CHART. It is recommended that the fuel pump be given the Fuel Pump Pressure and Delivery Tests in order to determine without any doubt that the trouble is in the pump and not elsewhere.

Check first for minor defects as follows: *if not Fuel or Insufficient Fuel is being delivered at Carburetor.*

1. Gasoline tank empty.

2. Bent, kinked, leaking, tubing or connections.

3. Dirty filter screen or loose sediment bowl. Take off glass sediment bowl, clean filter screen. Replace cork gasket if necessary. Tighten bowl thumbnut.

4. Loose valve plugs or caps. Replace valve plug gasket if necessary. Tighten plugs.

5. Warped or dirty valves. Loose valve seat. Remove valve plugs and take out valves. Wash valves in gasoline and if warped or gummed replace them. Valve must be smooth and tight in the pump body. Replace the valves and assemble valve springs and plugs.

6. Linkage worn. Driving spring weak. Check for excessive play in the linkage or a worn rocker arm pin which will shorten the pump stroke. Check diaphragm driving spring.

FUEL PUMP TESTING EQUIPMENT. There are various types of testing equipment some of which check the suction side for vacuum and some the delivery side for pressure. Some types of equipment check the output but usually require the running of the engine on the starter or from an outside fuel tank in the meantime catching the fuel delivered by the pump in a measure.

Vacuum testing alone is not reliable as it is possible to show vacuum on the inlet side without the pump actually being capable of delivering fuel, as would be the case with a pump inlet valve either blocked open or leaking badly.

Two things are necessary from a fuel pump--

1. Quantity of fuel the pump can deliver.
2. Pressure under operating conditions.

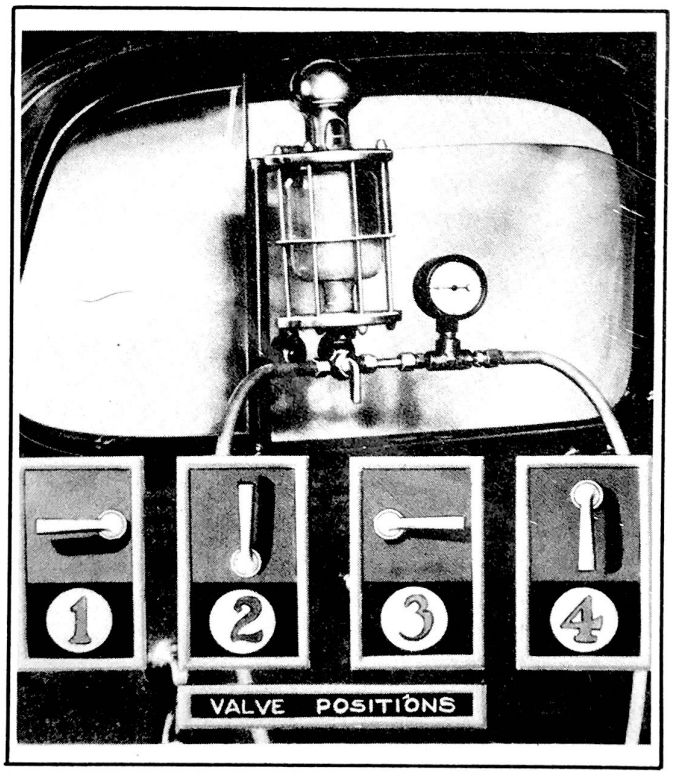

Figure 77 - Fuel Pump Test

The following specifications should be met by the various fuel pumps used.

Model	A.C. Model	Static Pressure	Minimum Capacity	Priming Speed
10,18 Pass	AF inverted bowl	2 lbs. minimum 3-1/2 lbs. maximum 1800 R.P.M.	1 pint in 1 minute	
11,12,14, 15,17,18	AP appended bowl	3 lbs. minimum 4-1/2 lbs. maximum	18 gal. in 1 hour at 1950 R.P.M. thru standard restriction	Prime in 12 seconds at 120 R.P.M.
A11	AJ comb. fuel and vacuum	3 lbs. minimum 4 lbs. maximum		Prime in 22 seconds at 60 R.P.M.

NOTE: The vacuum requirements on a mercury vacuum gauge are 8-1/2" of mercury at 120 R.P.M. and 12" of mercury at 1800 R.P.M.

The equipment shown in Fig. 77 makes it possible to take the above two readings without disturbing the functioning of the fuel system and the engine may be operated in the shop or on the road at any speed using the fuel from the car gasoline tank. Readings can be taken from the drivers seat.

This testing equipment consists of a pressure gauge connected into the inlet line of the gas per mile gauge and can be used to test the fuel pump and at the same time obtain gasoline mileage tests.

Remove the fuel line from the fuel pump to the carburetor. Install the testing equipment as shown in Fig. 77 and connect the hose from the rear to the fuel pump outlet and the hose from the front to the carburetor inlet.

FUEL PUMP DELIVERY PRESSURE TEST. Turn the valve to position 3 in Fig. 77 and start the engine. With the valve in this position the pump will deliver fuel directly to the carburetor and the delivery pressure will be shown on the gauge.

The pressure on the gauge to be taken only at the normal level of the gauge mounted on the body door.

Pressures are given under "Fuel Pump Testing Equipment".

At the lower engine speeds the hand on the gauge will fluctuate when the carburetor needle valve opens to admit gasoline, while at the higher speeds the flow of fuel into the carburetor is more constant and the gauge readings will be constant.

The highest pressure will be obtained at idling speed and the lowest at top car speed.

Too much pressure will hold the carburetor float needle valve off its seat and cause a high gasoline level in the float chamber and thereby cause excessive gasoline consumption.

FUEL PUMP FUEL DELIVERY TEST. Turn the valve to position (1), Fig. 77, and the gauge glass will fill with gasoline while fuel is still being supplied directly to the engine.

It should require (at idling speed) 36 seconds to pump the gauge glass full (1/10 gallon between the top and bottom graduations). The rate of delivery can be determined from this time.

The fuel pumped directly to the carburetor with the engine idling can be disregarded because the quantity is very small.

If the time required to fill the gauge is more than 36 seconds a high speed test should be made on the road.

The road test should be at a speed of at least 60 miles per hour.

1. Valve in position 3 Fig. 77 the pressure should show at least one pound pressure.

2. Valve in position 1, the gauge should be filled in at least one minute.

3. Fill the gauge and turn valve to position 4, and make a test at the same speed at which test 2 was made so as to be sure the engine is not taking on excessive amount of gasoline.

Excessive gasoline consumption will increase the time required to fill the gauge.

The time allowed in test 2 is based on the pump delivering ten gallons per hour and the engine using four gallons per hour or 15 miles per gallon at 60 miles per hour. If ten miles per gallon is obtained at 60 miles per hour it will require 90 seconds to fill the gauge if the pump is delivering 10 gallons per hour.

Timing is the accurate way of determining fuel flow, however, it is sufficient in cases where the car can be driven with wide open throttle to see that the gauge can be filled which insures against any starvation of the engine when it needs its maximum fuel supply.

In case it is more convenient to check mileage instead of time, drive the car at a constant speed of 60 miles per hour. The gauge should be filled in test 2 in not more than one mile of driving.

FUEL PUMP DIFFICULTIES AND REMEDIES

FUEL PUMP LEAKAGE THRU VENT IN PUMP BODY indicates a worn or punctured diaphragm. Loose diaphragm nut or defective gasket. See that the nut on the upper end of the pull rod is tight and that the gasket under the nut is in good condition.

FUEL PUMP LEAKING AT EDGE OF DIAPHRAGM indicates loose cover screws. Tighten cover screw alternately around the pump body.

CARBURETOR FLOODING. Carburetor needle valve not seating. Check the valve or its seat for wear. Check for sediment or other obstruction that might prevent valve from seating. Check the float level.

FUEL PUMP PRESSURE TOO HIGH OR TOO LOW. A high fuel pump pressure tends to lift the needle valve off the seat or hold it off the seat and flood the carburetor giving poor gas mileage and poor performance.

A low fuel pump pressure tends to promote vapor lock.

CLEANING FUEL PUMP BOWL. Remove glass sediment bowl and clean.
Carefully remove screen and clean.
If damaged replace. Check gasket.
Tighten fuel pump connections.
Check for diaphragm leaks; tighten cover screws.

COMBINATION FUEL AND VACUUM PUMP

Used on all Models as optional equipment.

The vacuum section is mounted on top of the pump body with the fuel pump below, see Fig. 78.

The oil seal used on the fuel pump pull rod makes it necessary to remove the rocker arm pin to engage or disengage the pull rod when servicing the diaphragm.

There are two distinctly separate units, a fuel pump and a vacuum pump and they are entirely separate in their purpose but both have the same operating linkage.

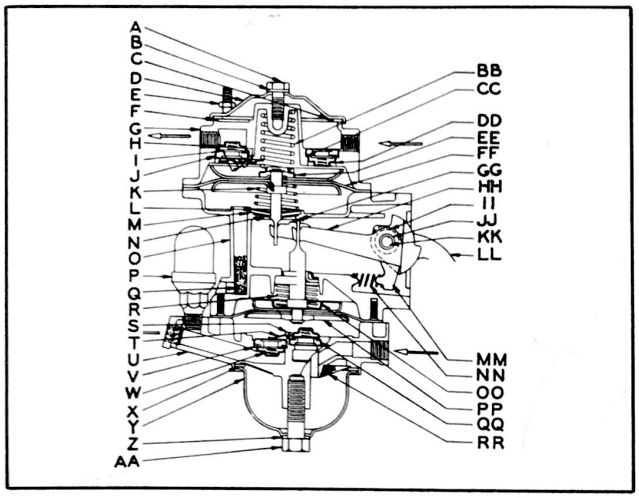

Figure 78
Combination Fuel and Vacuum Pump

A. Cover plate capscrew
B. Cap screw gasket
C. Cover plate gasket
D. Cover plate
E. Heat shield stud
F. Screen
G. Body
H. Valve plate
I. Valve plate screw
J. Valve and cage assembly
K. Oil seal spring
L. Oil seal retainer upper
M. Oil seal washer
N. Oil seal retainer lower
O. Body and oil seal assembly
P. Air dome
Q. Filter hair
R. Diaphragm spring
S. Valve plate screw
T. Valve plate
U. Cover
V. Valve cage gasket
W. Valve and cage assembly
X. Bowl gasket
Y. Metal bowl
Z. Gasket
AA. Bowl screw
BB. Diaphragm spring
CC. Valve cage gasket
DD. Valve and cage assembly
EE. Diaphragm spring seat
FF. Pull rod and diaphragm
GG. Vacuum link
HH. Fuel pump link
II. Spacers
JJ. Bushings
KK. Rocker arm pin
LL. Rocker arm
MM. Link spacer
NN. Rocker arm spring
OO. Spring retainer
PP. Pull rod and diaphragm
QQ. Valve and cage
RR. Screen assembly

The vacuum pump consists of a vacuum chamber which contains inlet and outlet valves and is closed at its lower end by the fuel pump diaphragm. A spring is assembled in the center of the vacuum pump under the diaphragm. The operating shaft on the upper surface of the diaphragm is connected to the fuel pump rocker arm thru the linkage.

In operation the fuel pump rocker arm (actuated by the eccentric on the camshaft) forces up the vacuum pump diaphragm forcing air out of the vacuum pump chamber thru the outlet valve into the intake manifold. When the fuel pump rocker arm moves back thus freeing the pump linkage, the driving spring on the vacuum pump diaphragm forces the diaphragm down creating a vacuum in the chamber, opening the inlet valve and causes the windshield wiper to operate.

If the windshield wiper is turned off, the vacuum in the vacuum pump chamber will hold the diaphragm at its upper end of its stroke (driving spring compressed) and the vacuum pump will not operate. Whenever the intake manifold vacuum is higher than the pump vacuum, the vacuum pump will likewise be inoperative and the windshield wiper will be operated by the intake manifold vacuum straight thru the pump with both valves open. At all other times the vacuum pump operates as a booster for permanent and stabilized operation of the windshield wiper (during acceleration or high speed operation).

The fuel pump suction stroke of the diaphragm is operated by linkage and the delivery stroke is operated by a driving spring on the diaphragm. The suction stroke is caused by the diaphragm being pulled up by the rocker arm which is fastened to a link and the link to a diaphragm pull rod. This suction stroke draws fuel through an inlet into the sediment bowl and then through filter screens and the inlet valve into the fuel pump chamber. The rocker arm is held against an eccentric driving cam on the camshaft by a spring and, therefore, is pulling up on the diaphragm part of the time and the balance

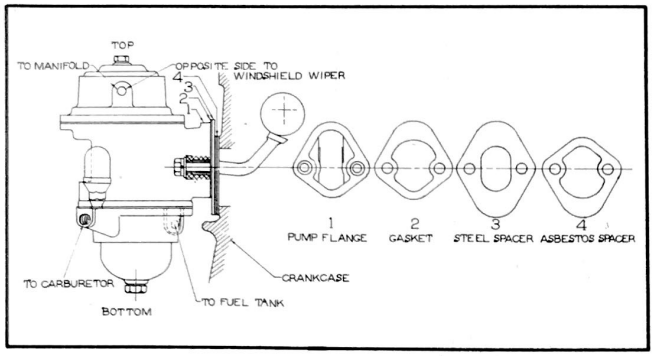

Figure 79 - Installing Combination Fuel and Vacuum Pump - All Models

of the time allows the compressed diaphragm spring to push down the diaphragm which causes the delivery stroke and forces the fuel out through the outlet valve to the carburetor. If the carburetor has enough fuel and the float valve has closed, the back pressure in the fuel line holds the diaphragm at the top of the stroke with its spring compressed and the rocker arm motion is taken up by the linkage. When the carburetor needs more fuel and the float valve opens, the pumping action of the fuel pump is resumed.

THE COMBINATION FUEL AND VACUUM KIT FOR INSTALLATION ON MODELS 10, 18 CONSISTS OF:

Fuel and vacuum pump assembly.
Fuel pump to cylinder spacer--asbestos and steel.
Fuel pump to cylinder spacer plate--steel.
Fuel pump to cylinder gasket.
Fuel pump to carburetor pipe assembly.
Fuel pump to manifold pipe assembly.
Fuel pump to manifold vacuum pipe elbow (pump end).
Fuel pump to manifold vacuum pipe elbow (manifold end).
Windshield cleaner tubing (rubber).
Windshield cleaner tubing connector (copper).
Fuel pump to cylinder bolt.
Fuel pump to cylinder bolt insulating sleeve.

THE COMBINATION FUEL AND VACUUM KIT FOR INSTALLATION ON MODELS 11,12,18 CONSISTS OF:

Fuel and Vacuum pump assembly.
Fuel pump to cylinder spacer (asbestos and steel).
Fuel pump to cylinder spacer plate (steel).
Fuel pump to cylinder gasket.
Fuel pump to carburetor pipe assembly.
Fuel pump to manifold vacuum pipe elbow (pump end).
Fuel pump to manifold vacuum pipe union (manifold end).
Windshield cleaner tube elbow (45 degree).
Windshield cleaner tubing (rubber).
Windshield cleaner tubing connector (copper).

THE COMBINATION FUEL AND VACUUM KIT FOR INSTALLATION ON MODELS 14,15,17 CONSISTS OF:

Fuel and vacuum pump assembly.
Fuel pump to cylinder spacer (asbestos and steel).
Fuel pump to cylinder spacer plate (steel).
Fuel pump to cylinder gasket.
Fuel pump flexible connection elbow (90 degree).
Fuel pump to carburetor pipe assembly.
Fuel pump to manifold vacuum pipe assembly.
Fuel pump to manifold vacuum pipe union (pump end).
Fuel pump to manifold vacuum pipe elbow (manifold end).
Windshield cleaner tube elbow (90 degree).
Windshield cleaner tubing (rubber).
Windshield cleaner tubing connector (copper).

COMBINATION FUEL AND VACUUM PUMP INSTALLATIONS INSTRUCTIONS FOR ALL MODELS.

1. Raise car and place on stand jacks.
2. Remove right front wheel and tire assembly.
3. Remove right fender dust shield.
4. Remove connector pipe from carburetor to fuel pump and discard.
5. Disconnect flexible gas line tube from fuel pump.

6. Remove fuel pump.
7. Clean fuel pump mounting flange on crankcase of old gasket.
8. Remove fittings from old fuel pump and install to holes in bottom of combination fuel and vacuum pump.
9. Install fibre sleeves in both holes of combination pump and install bolts with flat and lock washers in place in bolt holes.
10. Install gasket, plate and spacer over bolts as shown in Fig. 79 and install combination pump to crankcase bolting securely.

NOTE: The spacer (4) is of steel and asbestos and is .165" thick compressing to .148" when installed. On Models 10 and 18 it is necessary to install the two new fuel pump to cylinder bolts and insulating sleeves.

11. Install pipe included in kit from carburetor to lower fitting on front of combination pump.
12. Connect flexible gas line tube to lower fitting on back of combination pump.
13. Install 90° fitting supplied in kit in pump manifold opening or upper front hole or combination pump.
14. Remove 45° windshield upper hose fitting and short pipe from manifold and install in windshield wiper opening or top rear hole of combination pump.
15. Install 90° fitting supplied in kit to hole in manifold.
16. Install connector pipe supplied in kit from 90° manifold fitting on combination pump to 90° fitting in manifold.
17. Connect short piece of windshield wiper hose supplied in kit to 45° fitting and short pipe in combination pump.
18. Connect this hose to the original windshield wiper hose with the short tube provided in the kit.
19. Replace right fender dust shield.
20. Replace right front wheel and tire assembly.
21. Lower car to floor.

NOTE: It is very important that the correct gasket and spacer be used between the cylinder and the fuel pump to obtain the correct stroke.

COMBINATION FUEL AND VACUUM PUMP DISASSEMBLING - All Models, See Fig. 78. Clamp the pump in a vise and take out the two opposite flange screws and install special guide pins to act as pilots when the cover is removed. These guide pins can be made up of 3/16" cold rolled stock, 2" long with a fourth inch of No. 10-32 threads on one end.

Mark the cover and body flange to insure correct reassembly, take out the remaining flange screws and lift off cover assembly.

Press down on rocker arm and unhook diaphragm assembly from inner pump link. Lift diaphragm assembly out.

VACUUM PUMP BODY REASSEMBLING. Place the fibre inlet valve on the brass valve seat. The body is furnished with the valve seat installed.

Position inlet valve spring on valve.

Install spider shaped valve stop plate on the valve spring making sure that the top coil of the spring is seated in the recess in stop plate.

Install outlet valve spring and be sure that the spring is centered in the recess in the body.

Press down on inlet valve stop plate and install fibre outlet valve on valve spring. Make certain that the legs on the stop plate fit into the recess in the body. Without releasing valve stop plate, slide the retainer gasket into position and place retainer on top of the gasket. The countersunk holes must face up.

Insert the flat headed retainer screws and tighten them securely. The center screws should be tightened first and the end screw last.

Turn the pump body over and install the screen. The screen must be flat and fit snug around the screw holes in the body.

Install the gasket on the screen and place the bottom cover on the gasket and install the four cover screws.

CAUTION: Gasket must fit properly and the cover screws be tightened evenly to prevent leaks.

DIAPHRAGM REPLACING. Diaphragm should be installed with the pull rod assembly out of the pump.

Clamp the flat end of the pull rod in a vise and assemble the pull rod gasket and lower diaphragm protector cup with the cup side down, on the pull rod.

Place five layers of diaphragm material on the pull rod, lining up the tabs on the layers and turning the diaphragm so that the tabs are 7/16" clockwise from the center line of the pull rod flat end.

Assemble the upper diaphragm protector with cup side up; the alignment washer; lock washer and nut. Hold the alignment washer with a wrench and tighten nut.

Test diaphragm position to be sure that the diaphragm layers have not been twisted or moved from their position.

Place leather oil seal and cap on the pull rod boss. Install driving spring.

Place pull rod assembly in the pump with the diaphragm tab pointing toward the center of the mounting flange on the pump body.

Invert the pump and attach flat end of the pull rod in the notch in the operating link. Turn pull rod one fourth turn until the tab points toward the projection on the diaphragm flange. This will lock the pull rod and operating link.

A test cannot be made on the bench due to the tension of the driving spring in the vacuum pump.

DIAPHRAGM AND PULL ROD ASSEMBLING. The diaphragm and pull rod are furnished riveted together.

Place the small lower oil seal retainer; leather oil seal washer; large upper oil seal retainer and oil seal retainer spring in their positions in the pump body.

These parts must fit snugly in the recess around the pull rod hole.

Install the diaphragm on top of the retainer spring, thread the pull rod thru the oil seal and hook the hooked end of the long pump link in the pull rod slot.

VACUUM PUMP REASSEMBLY. Clamp the pump body, with fuel pump installed, in a vise with the vacuum diaphragm up.

Press down on the rocker arm until the diaphragm is flat on the flange. Install a small metal wedge between the body and shoulder on the arm to hold it in this position while finishing the assembly.

Place the heavy driving spring on the diaphragm.

Place vacuum pump body assembly in position on the spring.

Line up the flange marks made during disassembly and make sure that the spring is centered on the diaphragm also around the boss in the pump body.

Press down on the vacuum pump body and insert the flange screws with a lockwasher on each screw.

Turn down the screws loosely.

Remove the small metal wedge holding the rocker-arm and tighten the screws evenly.

Check the vacuum pump operation after the unit has been reinstalled on the engine.

TEST ON THE ENGINE. Install on the engine with the eccentric in the innermost position to avoid any possibility of distorting the pump mounting flange while the mounting nuts are being tightened.

The vacuum pump operation can be checked by noting the windshield wiper action during idling and accelerating of the engine. The action should be constant.

CAUTION: Do not operate the pump with the outlet closed or blocked.

VACUUM PUMP TROUBLE CHART. The windshield wiper action will indicate faulty vacuum pump operation.

Windshield wiper action slow at high speeds or when accelerating will indicate that the vacuum pump is not operating. Check the windshield wiper lines and fittings. If no leaks are found then disassemble the vacuum pump and check the valves and diaphragm.

Oil smoke in engine exhaust indicates a punctured diaphragm. To check before disassembling the pump, disconnect the line between the pump and the intake manifold and operate the pump. Hold a piece of paper over the pump outlet. Oil spray in the exhaust from the pump indicates a punctured diaphragm. If no oil spray is noted the oil smoke may be from worn piston rings, etc.

FUEL LEVEL GAUGE

The fuel level gauge Fig. 80 and 81, is an electric type gauge using bi-metal arms on which heating coils are wound in both the tank and the dash unit.

The two heating coils are connected in series and the gauge circuit is completed to ground thru a set of contacts in the tank unit (one of which is mounted on the bi-metal arm). The feed wire on the dash unit is connected to the accessory terminal of the ignition switch so that the gauge registers only with the ignition on.

The ground contact in the tank unit is mounted on a movable arm (arm mounted through diaphragm forming the lower cover of tank unit and flexes diaphragm as it is moved). The lower end of the ground contact arm is actuated by a cam on the upper end of the float rod pivot. When the float moves up to follow the gasoline, the cam moves the arm so that contact pressure and the length of time contacts remain closed is increased.

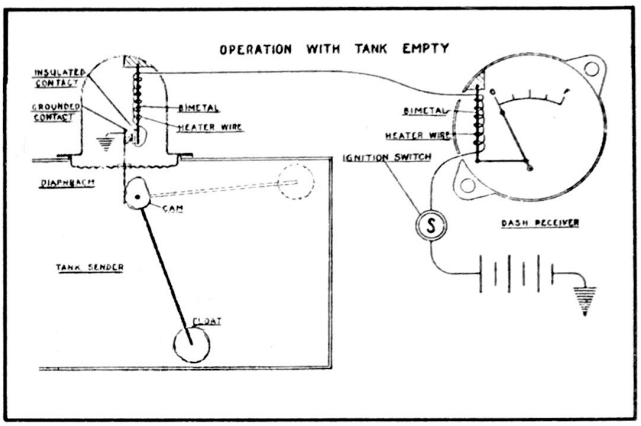

Figure 80
Fuel Gauge Operation with Tank Empty

When the tank contacts are closed a current flows thru the heating coils of both the tank and the dash units. This causes the bi-metal arm in the dash unit to bend moving the needle, and showing a reading on the dash unit. At the same time the heating coil in the tank unit causes its bi-metal arm to bend, opening the contacts and interrupting the current flow. When this occurs the heating action stops and the cooling of the bi-metal arm causes it to flex in the opposite direction and again close the contacts. In operation this cycle takes place very rapidly and a steady reading is obtained on the dash unit.

FUEL LEVEL GAUGE CHECKING. If the fuel level gauge becomes inoperative it is recommended that an extra tank unit be used for testing. If there is any question about the test tank unit being correct, then hook it up in series with a receiver known to be correct and 6 volts of battery current. Operate the tank unit by hand and see if the receiver reads zero with tank unit float in bottom position and full with tank unit float in the top position. Use two ten foot lengths of insulated wire equipped with clip terminals at each end. These lengths will permit the checking by one person in front of the dash unit.

Do not remove either the dash or tank unit on the car until the tests have been completed that proves them in need of replacement.

1. Disconnect the lead of the tank unit on the car and connect this lead to the test tank unit and ground this tank unit to the car frame. Turn on ignition switch and operate tank unit float by hand. With the float of the tank unit at the bottom position the dash unit should register at the bottom mark on the dial, see Fig. 80. Move float rod up to top position and the dash unit being checked should move to top mark on the dial, as shown in Fig. 81. Allow one minute for dash unit pointer to come to rest.

2. The tank unit is grounded thru the case. Check up the ground connections. See that paint and grease are removed under the flange and that surfaces are making good contact.

3. If the car is radio equipped, check the condenser on the tank unit. If the condenser is shorted it will cause the dash unit to over read. When replacing condenser it is preferable to use one of .10 microfarad capacity but up to .50 can be used to cut out radio interference.

4. If the ground (see paragraph 2) and condenser (see paragraph 3) are correct then replace the tank unit and see if this has corrected the difficulty.

5. If the dash unit does not operate or fails to operate correctly then check the wire lead to the dash unit and replace the wire if faulty.

6. If the wiring is satisfactory then replace the dash unit and check it with the tank unit on the car. If the dash unit fails to operate then replace the tank unit.

CAUTION: Do not attempt the repair or calibration of any dash unit or tank unit as this is not practical.

Install new unit whenever the old one is found inoperative. order from HUDSON PARTS DEPARTMENT.

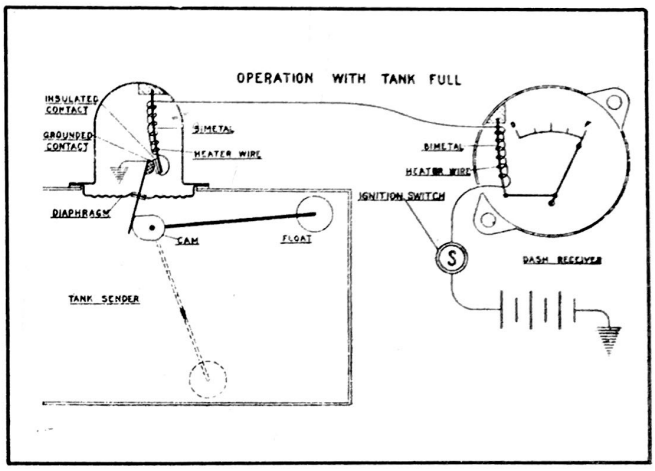

Figure 81
Fuel Gauge Operation with Tank Full

7. To install a new dash unit. Remove the wiring to the fuel and temperature instrument cluster. There are three wires, one is the hot lead from the ignition circuit and numbers two and three are the leads to the fuel gauge tank unit and to the water temperature gauge engine unit.

8. Remove cluster from the panel by removing three nuts top and sides.

9. Remove the lock nuts holding the bus bars and insulating shield from the dash unit and then remove the dash unit.

10. Install the new dash unit being careful to locate it properly so that the notches in the insulator are centered.

11. Replace insulator shield, locknuts and bus bars. Tighten securely.

12. Before replacing cluster, test to make certain that no short exists. Check from each instrument terminal to the case. If there is a circuit the instruments are not properly located as stated in paragraph 11. Correct this condition before proceeding.

13. Replace the cluster in the panel.

14. Replace the three wires--see paragraph 7.

CAUTION: When handling the instrument cluster be careful of the pointers and the dials.

GASOLINE TANK REMOVAL

The gasoline tank is held by straps, the rear end of which is self-retained in a slot in the frame crossmember and the front end in the rear seat pan by means of two carriage bolts with spring type nuts.

To remove the gasoline tank:-

Raise the car with a hoist.

Drain the tank and disconnect the gauge wire and the fuel line.

Disconnect the fuel tank support straps and remove the rubber cushion and grommet in the body quarter panel, around the filler neck.

Lower the tank enough to permit disengaging the filler pipe from the hole in the body. This can be done by dropping the end opposite the filler pipe and rotating the tank until it is free.

REFERENCES

SOURCE OF INFORMATION	DATE	SUBJECT

COOLING SYSTEM

SPECIFICATIONS

Water Circulation ..... Pressure Pump
Water Capacity - Cooling System
6 Cyl. ..... 13 Quarts
8 Cyl. ..... 18 Quarts
Water Pump Drive ..... V Belt
Fan Drive ..... Pump Shaft
Belt Adjustment ..... Generator Mounting
Water Pump Bearing ..... Bronze
Water Pump Lub. Fitting Alemite (Metered)
Water Pump Impeller ..... 6 blade
Water Pressure ... 30 gallons per minute at approx. 50 M.P.H.
Radiator ..... Cellular
Thermostat Location ..... Cylinder head water outlet
Thermostat used Model 10, 11, 12, 14, 15, 18 ..... Choke type
Thermostat used Model 15,17 By-pass type
Thermostat begins to open . 150° to 155°
Thermostat fully open ..... 185°
Temperature Gauge ..... Electric type

ANTI-FREEZE FILLING CHART

Temperature	Hudson Anti-Freeze			Ethylene Glycol (Prestone or Equivalent)			Methanol or Denatured Alcohol		
	Quarts		Liters	Quarts		Liters	Quarts		Liters
	U.S.	Imp.	Metric	U.S.	Imp.	Metric	U.S.	Imp.	Metric
6-Cyl. Models									
+20°	2 1/2	2	2 1/3	2	1 1/2	1 3/4	2	1 1/2	1 3/4
+10°	3 3/4	3 1/4	3 1/2	3	2 1/2	2 3/4	3 1/2	3	3 1/3
0°	4 1/2	3 3/4	4 1/4	4	3 1/2	3 3/4	4 1/4	3 1/2	4
-10°	5	4	4 3/4	5	4 1/2	4 3/4	5 1/4	4 1/2	5
-20°	5 1/2	4 3/4	5	5 1/2	4 3/4	5	6	5	5 1/2
-30°	6 1/2	5 1/2	6	6	5	5 1/2	6 3/4	5 1/2	6 1/3
8-Cyl. Models									
+20°	3 1/2	3	3 1/3	3	2 1/2	2 3/4	3	2 1/2	2 3/4
+10°	5 1/4	4 1/2	5	4 1/2	3 3/4	4 1/4	4 3/4	4	4 1/2
0°	6 1/4	5 1/4	6	6	5	5 1/2	6	5	5 1/2
-10°	7	6	6 1/2	7	6	6 1/2	7 1/3	6	7
-20°	8	6 1/2	7 1/2	7 3/4	6 1/3	7 1/4	8 1/2	7	8
-30°	9 1/2	8	9	8	6 1/2	7 1/2	9 1/2	8	9

COOLING SYSTEM CHECK UP. The efficient operation of the cooling system is one of the important factors in the satisfactory performance of any automobile engine.

Regular attention will eliminate cooling system difficulties and the most logical times for cleaning and conditioning a cooling system are:

1st When anti-freeze is installed in the fall.

2nd When anti-freeze is removed in the spring.

Check thermostat for correct operation and use a new gasket on the cylinder water outlet when reinstalling.

Examine all hose both inside and outside. If the inside is rotted and mushy, replace.

Tighten all hose connections and check all water joints for leaks.

Examine the radiator for leaks and tighten the radiator mounting bolts.

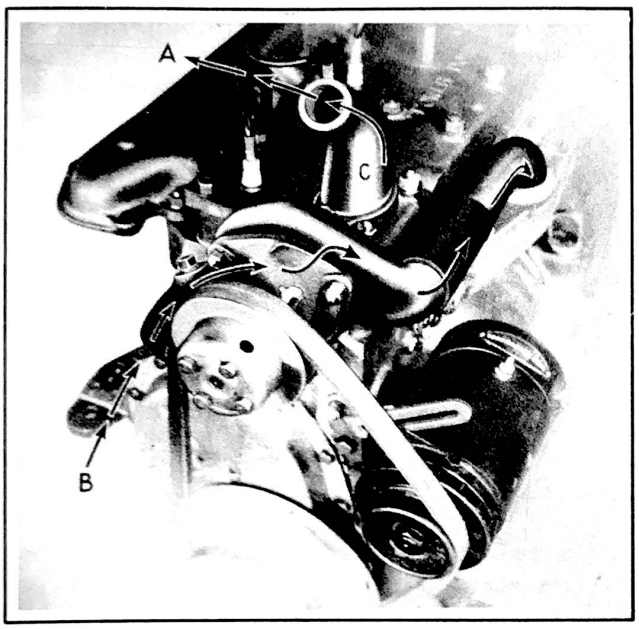

Figure 86 - Water Circulation
Models 10, 11, 14, 18

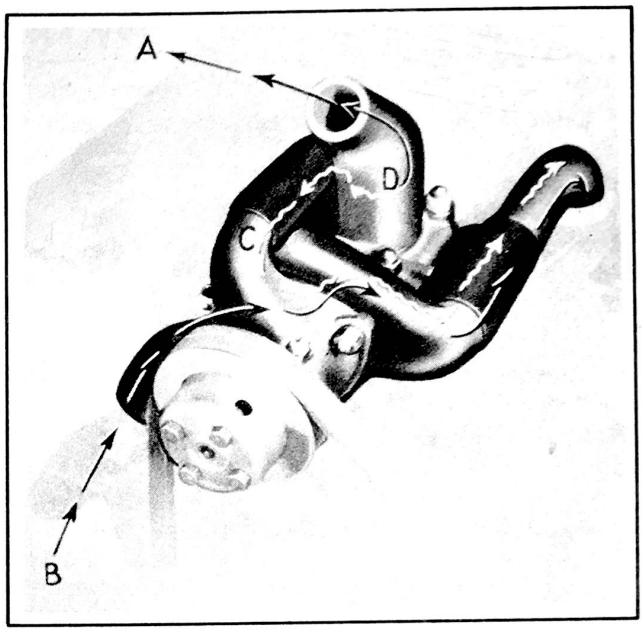

Figure 87 - Water Circulation
Models 15, 17

WATER CIRCULATION - Models 10,11,12,14 15,18. The thermostat is located in the water outlet (C), Fig. 86, and restricts circulation of the coolant through the radiator until the water has reached a temperature of 150° to 155° F. At this temperature the thermostat, which is of the choke type, begins to open and is fully opened at 185° F., permitting circulation of the coolant through the radiator as designated by arrows (A). After being cooled by circulating through the radiator, the coolant is brought back by the pump as designated by arrows (B) and is again pumped through the engine.

WATER CIRCULATION - Models 15, 17. The cylinder head water outlet (D) Fig. 87 has two outlets, one a small by-pass outlet (C) and the other the full size outlet (A) to the radiator. The by-pass outlet (C) is connected to the water pump intake. The thermostat seated in the cylinder head water outlet (D) has openings in it that allow a small amount of water to pass by it and this water goes through the by-pass to the pump instead of to the radiator. This water that is by-passed to the pump is forced back to the engine maintaining a pressure of water in the engine at all times. The thermostat seated in the cylinder water outlet below the by-pass and below the main water passage starts to open at 150° to 155° of water temperature and fully opens at 185° closing the by-pass as it opens and forcing the water to take the main passage which leads to the radiator for cooling when fully opened. In the course of opening, the thermostat allows some water to pass through the radiator and some to use the by-pass.

DRAINING COOLING SYSTEM. Two drain points are provided. One is at the lower left corner of the radiator and is provided with a drain cock. Opening this drain cock drains the radiator and a portion of the coolant in the engine block.

The second drain located at the rear left lower corner of the engine block is provided with a pipe plug. Removing this plug permits complete draining of the cooling system.

RADIATOR

RADIATOR CORE REMOVAL. Drain the radiator and remove the lower and upper hose connection.

Disconnect the radiator stay rod bolt at the radiator.

Remove the two radiator mounting bolts.

RUST AND SCALE IN RADIATOR. The most common difficulty in the cooling system is rust clogging the water passages of the radiator core.

Rust is formed in the water jackets of the cylinder block and head and is carried into the radiator during the normal water circulation. This rust acts as a blanket and prevents the water from being properly cooled and also restricts the circulation of the water due to partially blocking the passages.

Rust deposits allowed to remain will eventually shut off the circulation entirely resulting in the engine overheating.

Rust deposits in the water jackets will build up and prevent the proper cooling of the cylinder block and head, acting as an insulator against the very condition that is desired. i.e. cooling water against cylinder bores.

Rust is formed by the oxygen in the water. Oxygen in the water cannot be controlled but we can control the amount of oxygen that enters the system in other ways and by this is meant the excess oxygen that is drawn into the system through leaks in the connections. This excess oxygen speeds up rust formation to a far greater extent than the rust formations caused by the normal oxygen content in the water.

Lime in the water causes a hard scale to form in the water passages, this scale having the same form as the scale that forms in a tea kettle. This scale impairs the efficiency of the cooling system just the same as rust does.

A loose cylinder head or a damaged cylinder head gasket allows exhaust gases containing strong corrosive acids, to enter the cooling system and this also hastens rust formation.

Grease that may enter the cooling system acts as a binder for the particles of rust causing the rust formation to build up in the water passages. The heat is blanketed in and the water is prevented from circulating properly.

Rust and lime formations finally prevent dissipation of the engine heat and the engine becomes overheated and the water boils which causes it to be forced out the radiator overflow pipe causing loss of anti-freeze and water.

The overheating caused by this rusting and lime deposits will lead to burned valves, cracked cylinder heads, scored cylinders and pistons and possibly burned out bearings.

Keep the cooling system clean.

Clean the cooling system twice a year.

RUST AND CORROSION INHIBITOR. A good cleaning solution should be used to loosen the rust and scale before reverse flushing the cooling system. *Hudson Radiator Cleaner and Inhibitor* is an engineering tested preparation to be used for this purpose.

Care must be used in the selection of a cleaner as some of them contain strong acids or caustics that will react with the metal of the radiator core, eating holes through the metal and causing the radiator to leak.

The effectiveness of any inhibitor is limited to about six months after which the cooling system should be drained, flushed, refilled, and new inhibitor added.

Reverse flushing of the cooling system is the forcing of water through the system using air pressure and flushing in a direction opposite to that of the normal flow of water.

Reverse flushing is necessary in order to get behind the deposits and force them out.

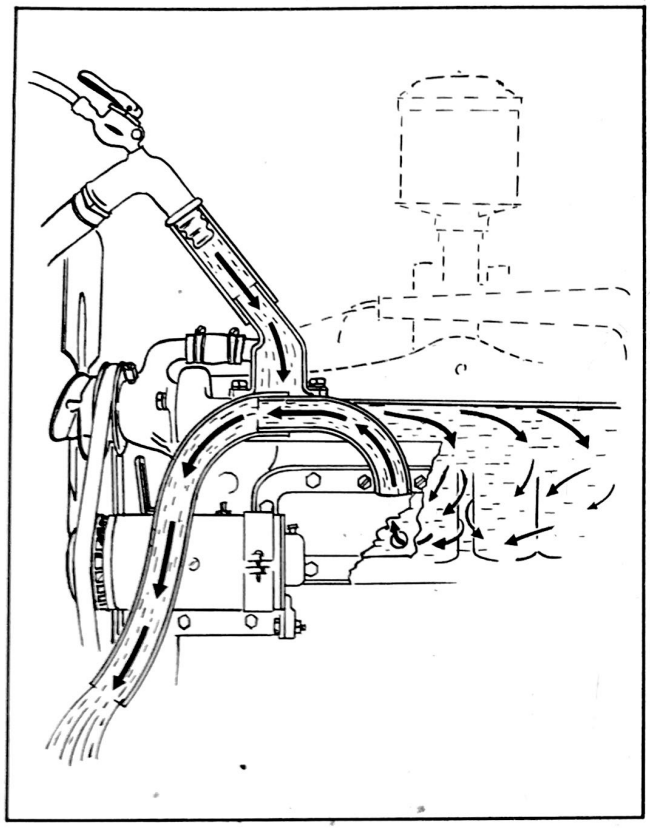

Figure 88
Reverse Flushing of Cylinder Block

Remove the thermostat as cold water will cause it to close and will result in building up pressure which might cause damage.

Remove the upper and lower radiator hose and replace the radiator cap if it has been removed.

Attach a lead-away hose at the top radiator connection.

Attach a piece of new hose at the lower radiator connection and insert the flushing gun in this hose. Connect the water hose of the flushing gun to a water tap and the air hose to an air line. Turn on the water and when the radiator is full turn on the air in short blasts. Allow the radiator to fill between the blasts of air.

Continue this flushing until the water from the lead-away hose runs clear.

Flush the cylinder block and cylinder head as follows--

Attach a lead-away hose to the water pump inlet and a length of new hose to the water outlet on the cylinder head. *Close the by-pass outlet if car is equipped with by-pass water pump.*

Insert the flushing gun in the new hose and turn on the water and when the water jacket is full turn on the air in short blasts. Continue this operation--first filling with water--then turning the air on until the water from the lead-away hose runs clear.

Hot water heaters should be flushed out separately.

Rust deposits build up in the heater core just the same as they do in the radiator core and will decrease the efficiency of the heater.

ANTI-FREEZE - See Chart on Page 78. Before installing anti-freeze,

Drain radiator and flush cooling system thoroughly.

Tighten cylinder head stud nuts.

Fill cooling system with required amount of anti-freeze, see chart and have the engine warmed up so that the thermostat is open--thus allowing the system to be filled completely.

Tighten cylinder head stud nuts again after engine is warm.

Check all water connections for leaks with engine hot.

WATER PUMP

WATER PUMP CONSTRUCTION. A packless, centrifugal six vane pressure water pump, Fig. 89, is used on all models. A shaft seal compression spring is incorporated which holds the seal snugly against the shaft at all times.

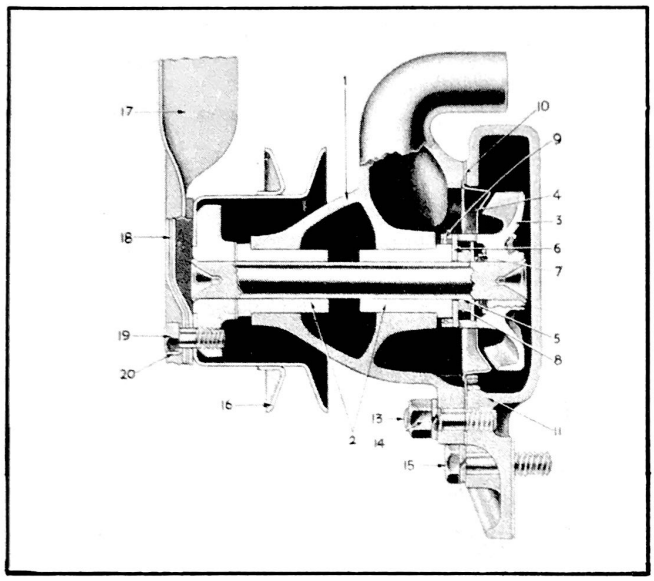

Figure 89 - Water Pump

1. Water pump body assembly.
2. Water pump body bushings.
3. Water pump impeller.
4. Water pump impeller cup.
5. Water pump shaft seal.
6. Water pump shaft seal thrust washer.
7. Water pump shaft seal compression spring.
8. Water pump shaft seal retainer.
9. Water pump shaft seal retainer spring.
10. Water pump body gasket.
11. Water pump impeller housing assembly.
12. Water pump impeller housing gasket.
13. Water pump impeller housing stud.
14. Water pump impeller housing stud nut.
15. Water pump impeller housing to cylinder bolt.
16. Pulley.
17. Fan blade.
18. Fan blade cushion.
19. Fan blade bolt.
20. Fan blade bolt lock.

The pump used on models 10,11,12,14, 15 and 18 has a single outlet, while the pump used on models 15 and 17 is provided with a small by-pass in addition to the main outlet.

WATER PUMP LUBRICATION is by means of a special grease fitting shown in Fig. 90 which is constructed to prevent the insertion of too much lubricant. When the reservoir in the water pump is filled with lubricant the plunger rises and cuts off the flow of grease from the gun thus preventing a grease pressure being set up in the water pump reservoir forcing grease past the bushings and into the water.

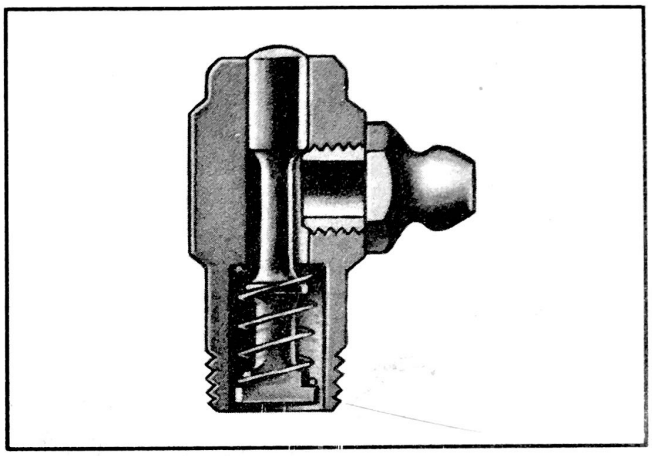

Figure 90 - Water Pump Grease Fitting

The front and the rear bearings of the water pump shaft are lubricated from this central reservoir and *a grease must be used that does not dissolve in hot water.*

The ordinary viscous greases suitable for chassis lubrication should not be used in the water pump. Wear and heat always make it possible for grease to get by the pump shaft bushings and into the water and therefore a grease that will not be dissolved by hot water must be used.

The only lubricant recommended is Aluminum Soap Base Grease. See Lubrication Section for specifications.

WATER PUMP REMOVAL. Drain cooling system.

Loosen generator and swing toward the engine in order to relieve tension on the fan belt.

Remove hose leading to radiator.

Remove the two cap screws and washers that attach water pump to engine.

Remove water pump assembly.

WATER PUMP REPAIR KIT. The following parts have been made into a repair kit

and sold under part number 159152 because it has been found that *these parts are most frequently required when an overhaul of a water pump is necessary.*

2 150288 Water pump bushing
1 158938 Water pump impeller
1 150226 Water pump shaft and pulley hub
1 155290 Water pump shaft seal
1 150232 Water pump shaft seal thrust washer
1 150233 Water pump shaft seal compression spring
1 158939 Water pump shaft seal compression spring washer
1 157895 Water pump shaft seal retainer
1 150235 Water pump shaft seal retainer spring
1 150219 Water pump body gasket
1 150222 Water pump impeller housing gasket

This kit is provided for convenience and contains only parts necessary for replacement on frozen or worn water pumps.

WATER PUMP SPECIAL TOOL SET for performing any of the servicing operations is shown in Fig. 91 and contains

J 733A1 Body
J 733A2 Thumbscrew
J 733A3 Cutter
J 733A4 Driver
J 733A5 Bushing Puller
J 733A6 Driver

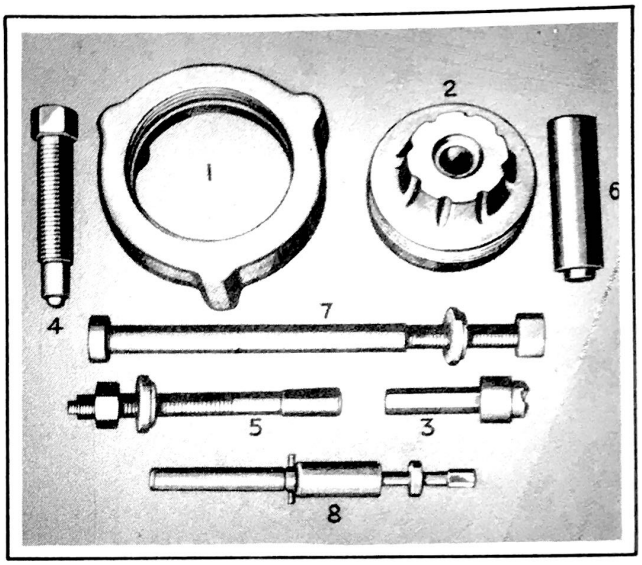

Figure 91 - Water Pump Reconditioning Tool Set - J-733B

1. Body
2. Thumb screw
3. Cutter
4. Driver
5. Bushing puller
6. Driver
7. Bushing pilot
8. Burnishing tool

J 733A7 Bushing pilot
J 733A8 Burnishing tool

The complete kit or set is J 733B and water pump reconditioning as given below shows the use of the parts of this set.

WATER PUMP DISASSEMBLING.

1. Remove fan blades and fan belt pulley by taking out the cap screws.

WATER HOSE LENGTHS - RADIATOR AND WATER PUMP

Hose Dimensions are as follows:

	MODELS	I.D.	LENGTH
Cylinder water outlet to radiator	10-11-12-18	1 1/2"	10"
Cylinder water outlet to radiator	14-15-17	1 1/2"	7 3/4"
Water pump outlet hose	all	1 1/2"	3 1/4"
Water pump by-pass hose	17	1"	2 5/16"
Radiator to water pump hose	14-15-17	1 5/8"	10"
Radiator to water pump hose	10-11-12-18	1 5/8"	8 1/2"

Water hose is supplied by the Hudson Parts department in all inside diameters and in 36" lengths. It can be cut to the length desired with a cutter tool KMO-102.

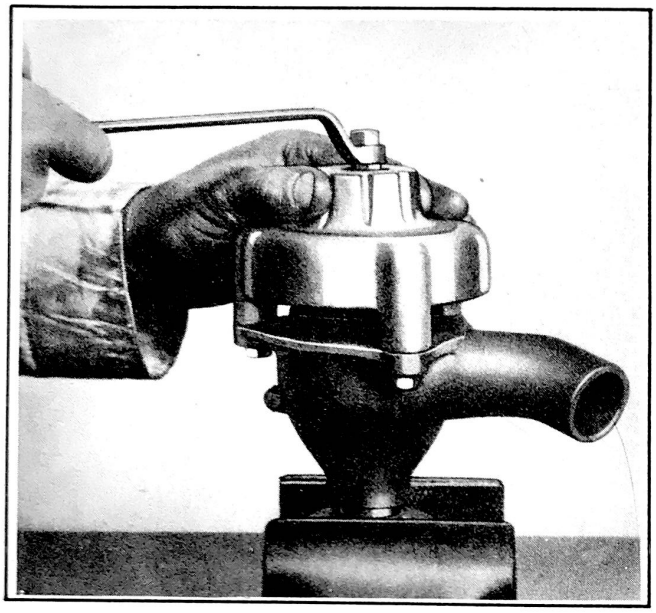

Figure 92
Cutting Burr from Water Pump Shaft
with Tool Set J-733B

2. Remove stud nuts holding pump impeller housing to pump body.

3. Assemble the body (No.1) of the water pump reconditioning set (J-733 B Fig. 91) to the water pump with the three attaching studs.

4. Clamp the pulley flange in a vise.

5. Insert the cutter (No.3) into the thumb screw (No.2) and then assemble them into the body (No.1) as illustrated in Fig. 92.

6. Turn the cutter with an end wrench and apply a slight pressure with the thumb of the hand at the same time. This will cut the burr end of the impeller shaft.

7. After the burr has been removed the thumb screw and cutter are removed and the driver (No.4) is inserted into the thumb screw. Reassemble the thumb screw with its driver into the body (No.1) and turn the driver, thereby pressing the shaft through the impeller as illustrated in Fig. 93.

8. Remove thumb screw and driver from the body (No.1).

9. Assemble the bushing puller (No.5) in the thumb screw placing the washer and nut on top.

10. Screw the thumb screw (No.2) in place in the body and thread the bushing puller (No.5) into the rear bushing until the puller has taken a firm hold, as illustrated in Fig. 94. Pull the rear bushing by turning the nut and holding the thumb screw in place at the same time.

11.. Remove the thumb screw (No.2) and install the driver (No.4) in the thumb screw and place driver (No.6) against the front bushing.

12. Install thumb screw (No.2) with driver (No.6) in the body (No.1) and press out the front bushing as illustrated in Fig. 95.

13. Disassemble the water pump impeller assembly by taking out the seal retaining spring. (No.9) Fig. 89, seal thrust washer (No.6) shaft seal (No.5) seal retainer (No.8); and seal compression spring (No.7).

Replace any parts showing wear.

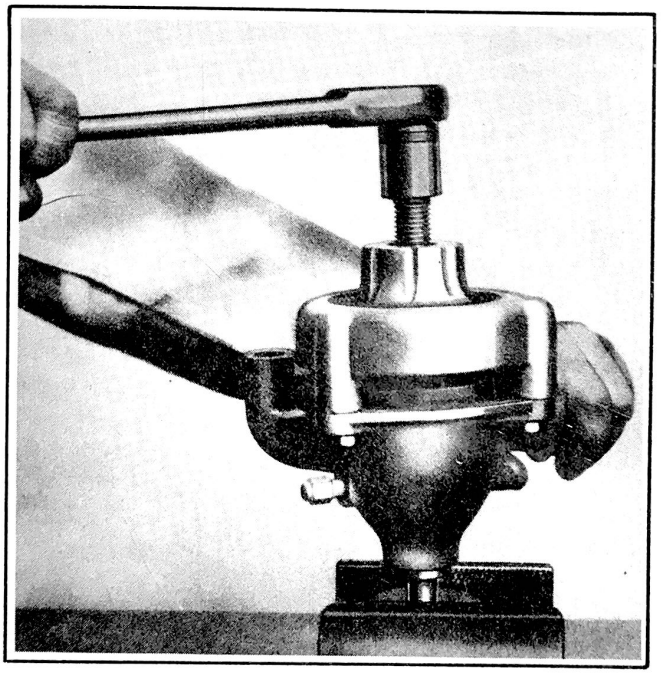

Figure 93
Removing Water Pump Shaft with
Tool Set J-733B

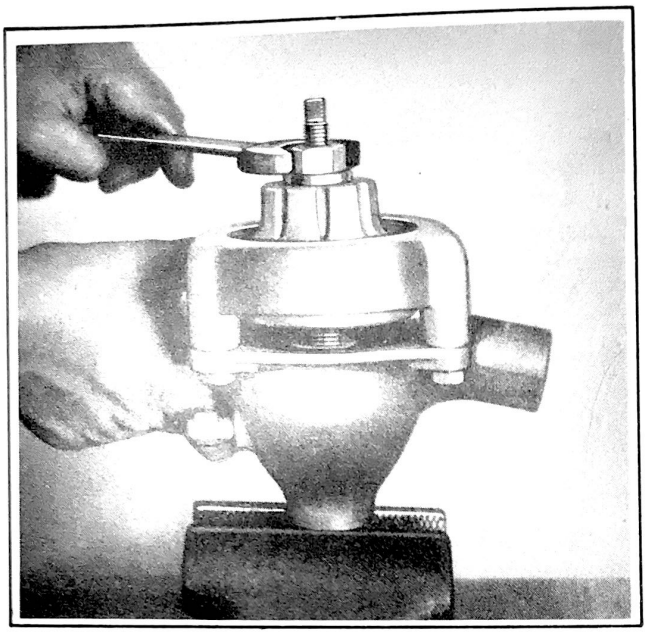

Figure 94
Removing Water Pump Rear Bushing
with Tool Set J-733B

WATER PUMP SHAFT BUSHINGS. The inside diameter of water pump shaft bushings is .6205" to .6206" out of the water pump. The inside diameter of these bushings after being pressed into the water pump is .6185" to .6190".

The shaft clearance between it and the bushings is .0015" to .0025" and to obtain this clearance the bushing pilot (No.7) in the reconditioning set J-733 B (Fig.91) must be used.

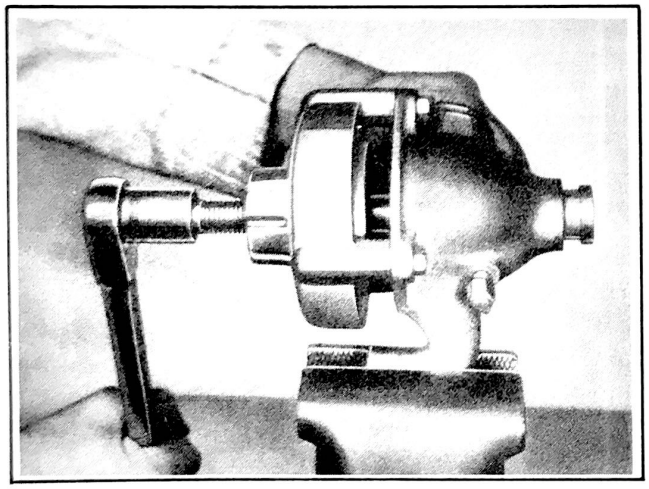

Figure 95
Removing Water Pump Front Bushing
with Tool Set J-733B

NOTE: The bushings cannot be reamed or cut in any way because of their composition. Hammer blows will cause the bushings to collapse.

CAUTION: Too much clearance will allow the shaft to wobble which forces the thrust washer (stainless steel) out of its line with the bushing thrust face and causes a water leak.

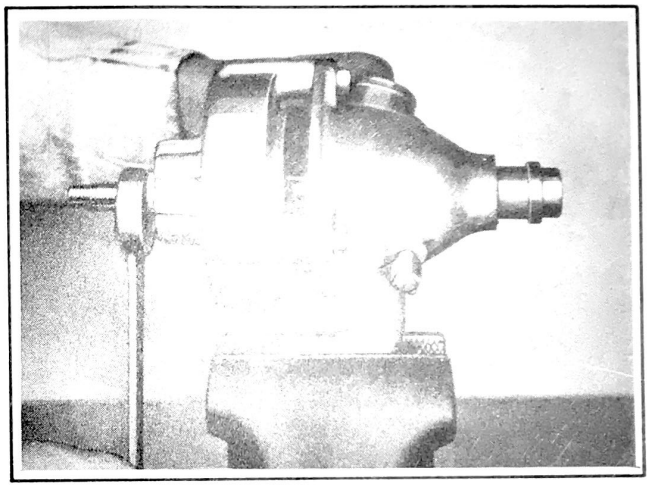

Figure 96
Installing Water Pump Front Bushing
with Tools Set J-733B

WATER PUMP ASSEMBLING. Install the front bushing so that it is just started into the water pump body and then insert the pilot (No.7) through the bushing and the water pump body as illustrated in Fig. 96.

Place the washer and nut on the pilot and pull the bushing into place by turning the pilot.

Remove the pilot. Install the rear bushing so that it is just started into the water pump body.

Insert the pilot through both bushings and also through the thumb screw, as illustrated in Fig. 97.

Place the washer and nut on the pilot and pull the rear bushing into place by turning the pilot.

Place the burnishing tool (8) supplied in repair kit in the rear bushing just

installed. Install the thumb screw (No. 2) over the hex end of the burnishing tool and screw thumb screw into the body (No.1).

Hold the thumb screw finger tight and spin the burnishing tool *(DO NOT stop the spinning motion)* using a socket wrench.

CAUTION: If the turning of the burnishing tool is stopped while pressure is on it, a crease will be formed across the face of the bushing.

Repeat the burnishing until a highly polished face is produced. The face must be free of dents, burrs or scratches.

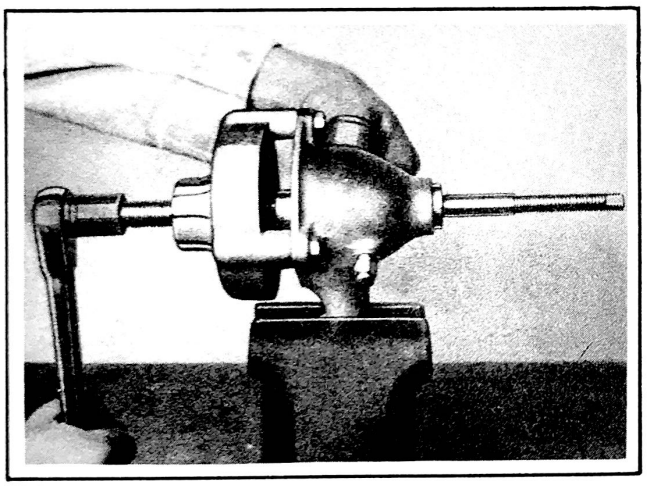

Figure 97
Installing Water Pump Rear Bushing with Tool Set J-733B

WATER PUMP SHAFT AND IMPELLER INSTALLING. Install the shaft assembly with the impeller assembly in the water pump body.

Place the pulley flange on a solid surface and peen the end of the pump shaft.

NOTE: Check the end play between the pulley flange and the front face of the bushing.

The end play should be from .010" to .014".

Assemble impeller housing to the body and install fan pulley and blades.

WATER PUMP INSTALLING ON ENGINE. Always fill the water pump grease reservoir with an aluminum soap base lubricant.

Install the pump and fasten with the two cap screws and washers.

Install fan belt and adjust the tension to 3/4" measured at C. (See Fig. 98).

Tighten generator and adjustment bolts and nuts.

Fill cooling system.

FAN BELT

FAN BELT ADJUSTMENT. The fan belt is adjusted by swinging the generator on its mounting. Since the fan belt is of the "V" type construction it does not require tension to prevent its slipping.

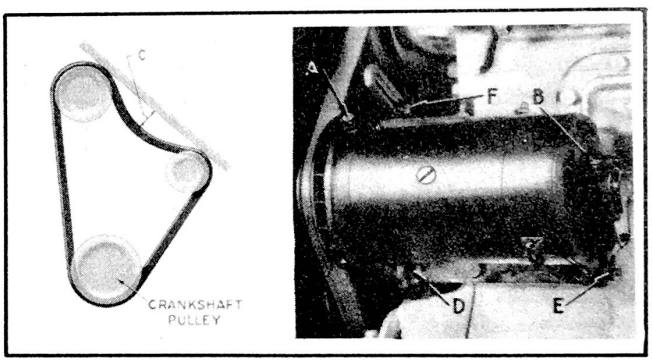

Figure 98 - Adjusting Fan Belt

A slight amount of slack must be allowed to prevent an overload being placed on the water pump and generator bearings.

Loosen the two generator bracket bolt nuts D and E (Fig. 98) adjusting the arm nut F and bolt holding adjusting arm to cylinder block.

Pull generator away from the engine until the slack in the fan belt is such that the section between the water pump pulley and the generator pulley can be pushed down 3/4" below a straight edge laid across these pulleys as shown at (C), Figure 98.

Tighten adjusting arm bolt nut and generator mounting bracket nut.

THERMOSTAT

TESTING THERMOSTAT. The temperature at which the thermostat opens is very important and it should be checked whenever the complete cooling system is being checked.

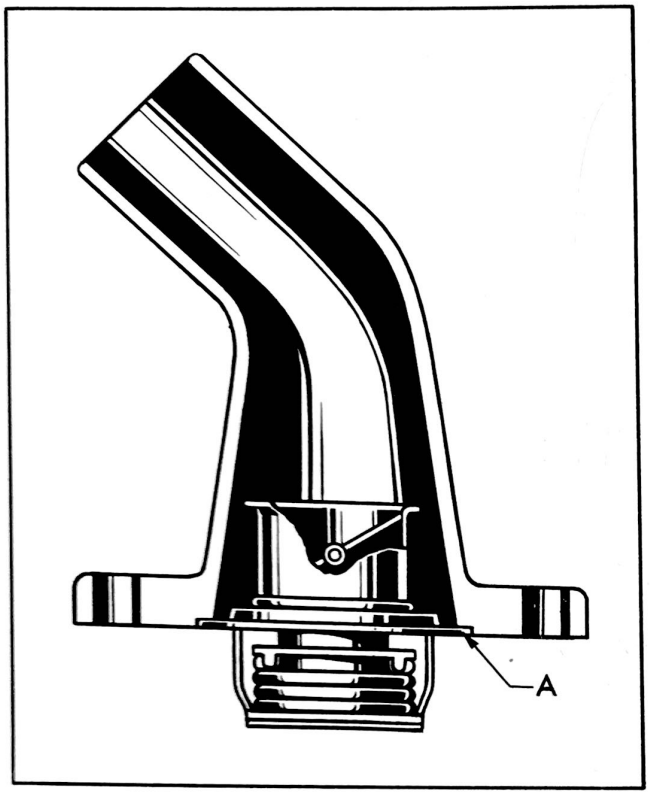

Figure 99 - Cylinder Head Water Outlet with Thermostat in Place

Place the thermostat in a pail of water with a thermometer and heat the water until the thermostat starts to open. The thermometer should show from 150° to 155° F.

Continue heating the water until the thermostat is wide open. The thermometer should show 185° F.

Thermostats that:
Do not open completely
Open at too low a temperature
Open at too high a temperature
should be discarded. *A thermostat that opens too soon will cause the engine to operate at too low a temperature and if it opens too late or is sticking the engine may overheat.*

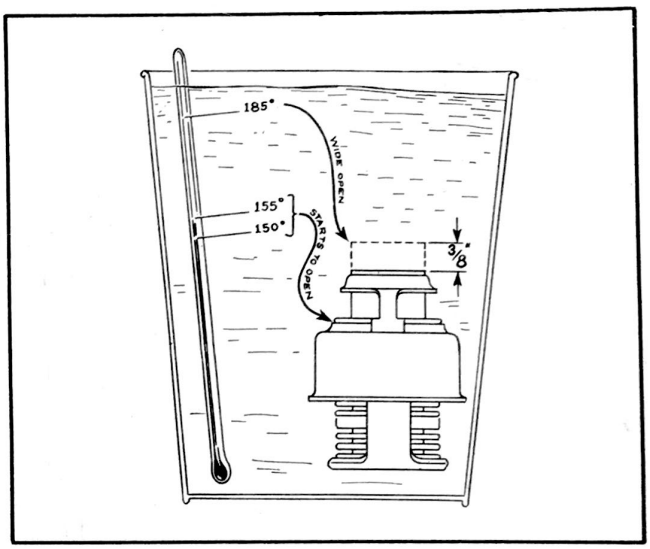

Figure 100 - Testing Thermostat

WATER TEMPERATURE GAUGE

The water temperature gauge is an electric type gauge using bi-metal arms on which heating coils are wound in both the engine unit and the dash unit.

The engine unit consists of a fixed grounded contact so positioned that the bi-metal against which it presses is bent mechanically.

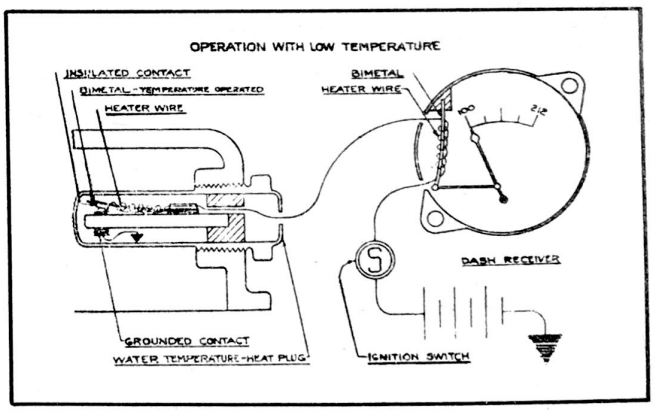

Figure 101 - Water Temperature Gauge - Low Temperature Operation

At low temperatures, considerable heat is required to make this bi-metal bend away from the grounded contact. With the temperature of the engine cooling water low, all of this heat must be made electrically and this same current flowing through the heater wire of the dash

unit creates an equal amount of heat there and results in bending of the dash unit bi-metal causing the pointer to show a low temperature reading.

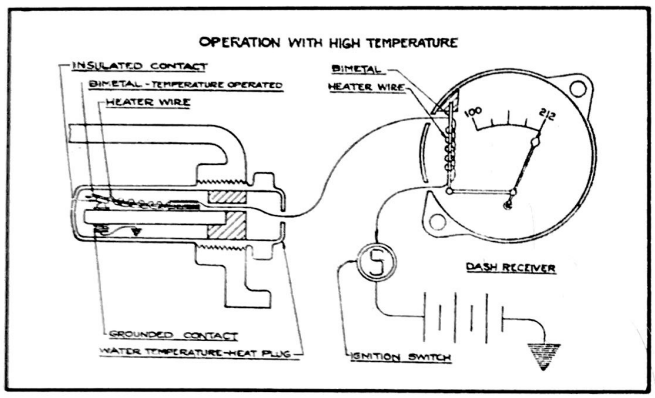

Figure 102 - Water Temperature Gauge - High Temperature Operation

As the cooling water temperature rises, the heat of it aids in bending the engine unit bi-metal. Less heat is generated electrically and the resulting bending of the dash unit bi-metal is less. This gives a higher temperature reading.

One wire connects the engine unit to the dash unit.

The same testing and replacing instructions apply as for the Fuel Level gauge.

WATER TEMPERATURE GAUGE. The Fuel and Temperature cluster assembly is attached by three screws.

The at rest position of the indicator hand is at the "H" or hot end of the dial.

A cylinder head temperature element is at the left side of the cylinder head at the rear and it is connected to the water temperature indicator on the instrument panel.

All wiring connections should be tight both at the cylinder head temperature element and at the indicator.

It is impossible to repair or adjust either the element or the indicator.

REFERENCES

SOURCE OF INFORMATION	DATE	SUBJECT

ELECTRICAL SYSTEM

GENERATOR SPECIFICATIONS

Make ..... All Models use Auto-Lite.
Model ..... GDS 4801 A, Models 10,18 - not used with 3x5 engine.
GEC 4801 A, Models 11,12,14,15,17 and 10 with 3x5 engine.
Type ..... 3rd Brush, all Models.
Rotation ..... C.W.D.E., all Models.
Drive ..... Fan Belt, all Models.
Control ..... 3rd Brush and Vibrating Regulator.
Fuse ..... None.
Bearing, Commutator end ..... Bronze, all Models.
Bearing, drive end ..... Ball, all Models.
Bearing clearance ..... .001" to .0025", all Models.
Brush spring tension ..... 53 oz. maximum with new brushes, all Models.

Field Current Draw .... Models 10 and 18

Volts	Amps. Max.	Amps. Min.
6.0	1.82	1.65
6.8	2.07	1.87
7.2	2.19	1.98
7.6	2.31	2.09

Models 11,12,14,15,17,18

6.0	1.78	1.60
6.8	2.01	1.81
7.2	2.12	1.92
7.6	2.24	2.03

Motorizing Draw ..... Models 10 and 18

6.0	5.45	5.10
6.8	5.65	5.38
7.2	5.80	5.50
7.6	6.00	5.65

Motorizing Draw .. Models 11,12,14,15,17,18

Volts	Amps. Max.	Amps. Min.
6.0	5.4	4.85
6.8	5.6	5.03
7.2	5.7	5.12
7.6	5.8	5.2

Maximum Output - cold .. Models 10 and 18

6.6	28.0	25.0
7.0	29.7	27.0
7.6	32.3	30.0
8.0	34.0	32.0

Models 11,12,14,15,17,18

6.6	35.0	30.2
7.0	36.6	31.9
7.6	40.3	35.7
8.0	43.0	39.0

Charging curve ..... Models 10 and 18 - See Fig. 109
Models 11,12,14,15,17,18 - See Fig. 110

DISTRIBUTOR

Rotation (viewed from top) ..... Left Hand, Models 10,11,12,18.
Right Hand, Models 14,15,17.
Make ..... Auto-Lite, all Models.
Model ..... IGW-EO 5990, Models 10,11,12,18.
IGP 4008 A, Models 14,15,17.
Cylinders ..... 6 on Models 10,11,12,18. 8 on Models 14,15,17.
Timing ..... Adjustable thru range of 360° by loosening hold down clamp screw.
Automatic Advance (flywheel) ... 28° max., Models 10,11,12,18.
Engine (distributor shaft) ..... 17 1/2° max., Models 14,15,17.

Control ..... Vacuum advance and automatic, Models 10,11,12,18. Automatic on Models 14,15,17.

End play ..... .003" to .010" in drive shaft after coupling is pinned, all Models.

Side play ..... .005" in bearings. New bearings fitted .0005" min. to .001" max.

Condenser ..... Located on outside of housing. Capacity .20 to .25 Mfd.

Breaker point gap ..... .020"-Check with wire feeler gauge, Models 10,11,12,18.
.017"-Check with wire feeler gauge, Models 14,15,17.

Cam Dwell or Angle ..... 35°, Models 10,11,12,18.
31° closed, 14° open, Models 14,15,17.

Breaker arm spring tension ..... 17 to 20 oz., Models 10,11,12,18.
18 to 20 oz., Models 14,15,17.

Breaker points open ..... T.D.C., 8 cyl. Models - 1/2" B.T.D.C., 6 cyl.Models.

Firing order ..... 1-5-3-6-2-4, Models 10,11,12,18.
1-6-2-5-8-3-7-4, Models 14,15,17.

Vacuum advance ..... Models 10,11,12,18.

	Advance Distribution Degrees	Inches of Mercury
Start advance	0°	7"
Intermediate advance	2°	7 3/4"
Intermediate advance	4°	8 5/8"
Intermediate advance	6°	9 3/8"
Full advance	7.5°	10"

NOTE. Flywheel degrees are double these figures.

Vacuum advance curve ..... See Fig. 122.

Automatic advance ..... Models 10,11,12,18.

	Advance Distributor Degrees	Distributor R.P.M.
Start advance	0°	300
Intermediate advance	3°	400
Intermediate advance	7°	825
Intermediate advance	11°	1225
Full advance	14°	1580

NOTE. Engine R.P.M. and flywheel degrees are double these figures.

Automatic advance curve ..... See Fig. 121.

Automatic advance ..... Models 14,15,17.

Distributor R.P.M.	Advance	Distributor R.P.M.	Advance
300	0.0	1210	12.0
400	3.0	1345	13.5
535	4.5	1480	15.0
670	6.0	1615	16.5
800	7.5	1700	17.5
935	9.0	2000	17.5
1070	11.5		

NOTE. Engine R.P.M. and flywheel degrees are double these figures.

Flywheel teeth 134

Degrees to a tooth 2 2/3

VOLTAGE REGULATOR

Make	Auto-Lite.
Model	All Models use VRR 4001 A.
Ground Polarity	Positive.
Volts	6 Volt.
Circuit Breaker (cutout relay)	
Points close	6.4 to 7.0 Volts.
Points open	6.0 Amps. at 6.3 Volts min. to 6.4 max.
Open circuit voltage.. at battery	6.3 minimum to 6.4 max.
Armature speed at closing	825 R.P.M.
Ampers to open	6 Amps. max. discharge.
Car speed at closing	9.4 M.P.H.
Operating Voltage	7.1 to 7.4 Volts at 70° F.

SPARK PLUGS

Make	Champion
Type	J-9 Hudson
Thread	14 M.M.
Gap	.032"

IGNITION COIL

Make	Auto-Lite, all Models.
Location	Dash in engine compartment.
Model	IG 4098, Models 10,11,12,18. CE 4029, Models 14,15,17.
Amperage draw	All Models.
Engine stopped	4.5 Amperes.
Engine idling	2.5 Amperes.
Lock	on primary circuit.
Lock cylinder location	End of ignition coil cable.
Lock cylinder removal	by a spring type retainer.
Lock key series	H 601 - H 1100.
Lock blank cylinders	Tumblers are cut to match key.

STARTING MOTOR

Make	Auto-Lite, all Models.
Model	MAZ 4092. Models 10,11,12,18 - MAB 4100. Models 14,15,17.
Rotation	C.W.D.E., all Models.
Volts	6
Diameter	4", Models 10, 11,12,18. 4-1/2", Models 14,15,17.
Brush spring tension	42 to 53 oz. with new brushes all Models.
Bearings	Two Bronze bearings, all Models.
End play	1/16" max., all Models.
Drive	Bendix, inboard, Left Hand, all Models.
Solenoid switch location	Top of starting motor.
Starting switch location	Button on instrument panel.
Test without load and with Bendix	Models 10,11, 12,18.

Ampere draw	Volts	R.P.M.
70	5.5	4300

Test with load ..... Models 10,11,12,18.

Amps.	Volts	Load in Foot Pounds	R.P.M.
100	5.5	.65	2500
200	5.0	2.55	1325
300	4.5	4.95	750
400	4.0	7.65	220

Stall torque test ...Models 10,11,12,18.

Amps.	Volts	Load in Foot Pounds
260	2.0	4.3
380	3.0	7.75
540	4.0	12.20

Torque curve ..... See Figs. 112-113.

Test without load and with Bendix ..... Models 14,15,17.

Ampere Draw	Volts	R.P.M.
60	5.5	3700

Test with load ..... Models 14,15,17.

Amps.	Volts	Load in foot pounds	R.P.M.
100	5.5	0.7	2220
200	5.0	3.4	1240
300	4.5	6.4	795
400	4.0	9.65	450

Stall torque without switch ..... Models 14,15,17.

Amps.	Volts	Load in foot pounds
388	2.0	9.2
582	3.0	15.8
775	4.0	22.5

Stall torque with switch ..... Models 14,15,17.

375	2.0	8.7
575	3.0	15.2
750	4.0	21.5

BATTERY

Make	National
Number of Plates	17, Models 10,11,12,18 19, Models 14,15,17.
Length, Model 10,11,12,18	10-9/16"
Width, Model 10,11,12,18	7-1/4"
Height, Model 10,11,12,18	7-13/16"
Length, Models 14,15,17	11-3/4"
Width, Models 14,15,17	7-1/4"
Height, Models 14,15,17	7-13/16"
Terminal grounded	Positive
Specific gravity	1250 to 1290 at 70° F.
Height of water level	3/8" above plates.

BULBS

	C.P. Sealed Beam	Base	Voltage	Mazda No.
Headlamp			6-8	---
Bonnet side panel	1-1/2	S.C.	6-8	55
Fender Lamp with direction indicator	21	S.C.	6-8	1129
Fender Lamp without direction indicator	3	S.C.	6-8	63
Stop and Tail	21-3	D.C.	6-8	1154
License Lamp	3	S.C.	6-8	63
Dome	15	S.C.	6-8	87
Beam indicator	1	S.C.	6-8	51
Ignition lock	1-	S.C.	6-8	51
Speedometer	1-1/2	S.C.	6-8	55
Radio	1-	S.C.	6-8	44
Generator and oil indicator	1-1/2	S.C.	6-8	55
Direction indicator	1	S.C.	6-8	51
Mechanical clock	1	S.C.	6-8	51
Electric clock	1-1/2	S.C.	6-8	55

HORNS

Twin Electric	Models 10 Pass., 11,12,14,15,17.
High pitch	Short horn.
Low pitch	Long horn.
Diaphragm	High pitch horn .0195" thick.
Diaphragm	Low pitch horn .015" thick.
Air gap - high pitch	.026" to .030".
Air gap - low pitch	.032" to .035".
Horn relay points close	3 to 4 volts.
Horn relay points open	2 volts across coil relay in upright position.
Horn relay coil resistance	7.3 to 8.9 ohms at 70° F.
Fuse	30 Amp. - on dash under bonnet.
Single Vibrator	Models 10 Traveler and Model 18.

Adjustment is by fillister head screw at outer edge of cover - Do not move screw in center of cover.

GENERATORS

GENERATORS are of the high rate, adjustable third brush type with voltage regulation.

A suction fan integral with the generator drive pulley provides adequate ventilation to prevent overheating. The path of cool air is through the openings in the rear end plate, over the armature and out through the openings in the front end plate.

SPECIAL GENERATORS are avilable for use on special cars that are used in Police, State Highway, Sheriff Departments, and some Special Taxicab use. These cars are driven in a different manner than are the standard automobiles.

Special generator requirements are divided into three classes:

SLOW DRIVING as is done with Prowl cars with radio receiving equipment only. Recommended is Auto-Lite Generator GEB 4802 with a special Voltage Regulator and HT 19 plate National Battery.

NORMAL AND FAST DRIVING with radio receiving equipment only. This is the special generator ordinarily used because it meets most requirements of a special duty generator. Recommended is Auto-Lite Generator GEA 4803 B with Voltage Regulator VRP 4008 B and HT 19 plate National Battery.

SLOW OR FAST DRIVING but with radio receiving and sending equipment. Recommended is Auto-Lite Generator GEG 4801 A with Voltage Regulator VRP 4008 A and HT 19 plate National Battery.

SPECIAL GENERATOR GEB 4802 with voltage regulator for slow driving in cars with radio receiver, cuts in at 5-3/4 M.P.H. and reaches its peak output of 35 amperes at 15 M.P.H., remaining constant throughout the higher speed range. This means that the generator is charging at low speeds or when idling and also that a constant maximum output is maintained at slow cruising speed.

SPECIAL GENERATOR GEA 4803 B with voltage regulator VRP 4008 B for normal and fast driving with radio receiver, cuts in at 8-3/4 M.P.H. and reaches its peak output of 35 amperes at 17-3/4 M.P.H. remaining constant during the higher speed

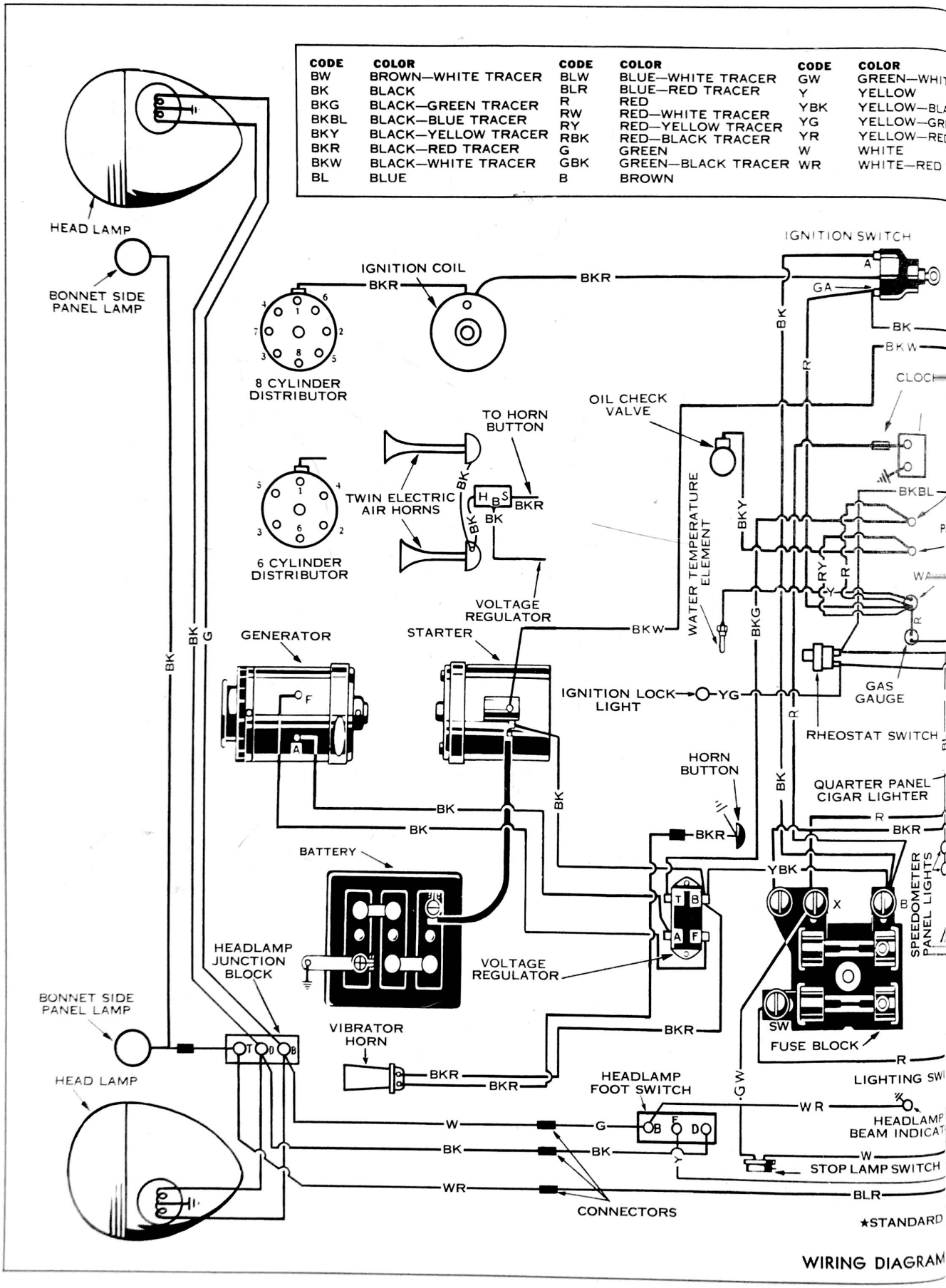
CODE COLOR
BW BROWN—WHITE TRACER
BK BLACK
BKG BLACK—GREEN TRACER
BKBL BLACK—BLUE TRACER
BKY BLACK—YELLOW TRACER
BKR BLACK—RED TRACER
BKW BLACK—WHITE TRACER
BL BLUE
CODE COLOR
BLW BLUE—WHITE TRACER
BLR BLUE—RED TRACER
R RED
RW RED—WHITE TRACER
RY RED—YELLOW TRACER
RBK RED—BLACK TRACER
G GREEN
GBK GREEN—BLACK TRACER
B BROWN
CODE COLOR
GW GREEN—WHIT
Y YELLOW
YBK YELLOW—BL
YG YELLOW—GR
YR YELLOW—RE
W WHITE
WR WHITE—RED
HEAD LAMP
BONNET SIDE PANEL LAMP
IGNITION COIL
8 CYLINDER DISTRIBUTOR
6 CYLINDER DISTRIBUTOR
TO HORN BUTTON
TWIN ELECTRIC AIR HORNS
OIL CHECK VALVE
WATER TEMPERATURE ELEMENT
VOLTAGE REGULATOR
GENERATOR
STARTER
IGNITION SWITCH
IGNITION LOCK LIGHT
GAS GAUGE
RHEOSTAT SWITCH
HORN BUTTON
QUARTER PANEL CIGAR LIGHTER
BATTERY
HEADLAMP JUNCTION BLOCK
VOLTAGE REGULATOR
SPEEDOMETER PANEL LIGHTS
FUSE BLOCK
VIBRATOR HORN
HEADLAMP FOOT SWITCH
HEADLAMP BEAM INDICAT
STOP LAMP SWITCH
LIGHTING SW
CONNECTORS
★STANDARD
WIRING DIAGRAM

E TRACER
CK TRACER
EN TRACER
TRACER
RACER

FUSE DATA

Circuit	No. Used	Capacity
LIGHTING	1	20 AMP.
ACCESSORY	1	20 AMP.
CLOCK	1	2 AMP.
DIRECTION INDICATOR	1	10 AMP.

INDICATING FUSE
INDICATING WIRE CONNECTOR

★ WIRING FOR DIRECTION INDICATOR

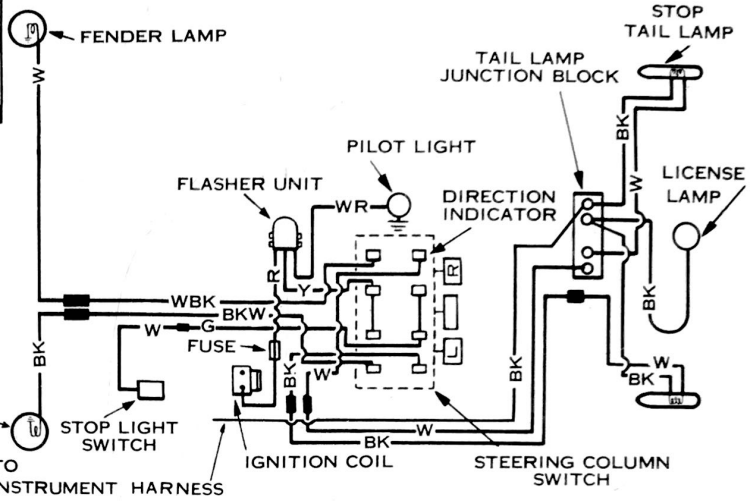

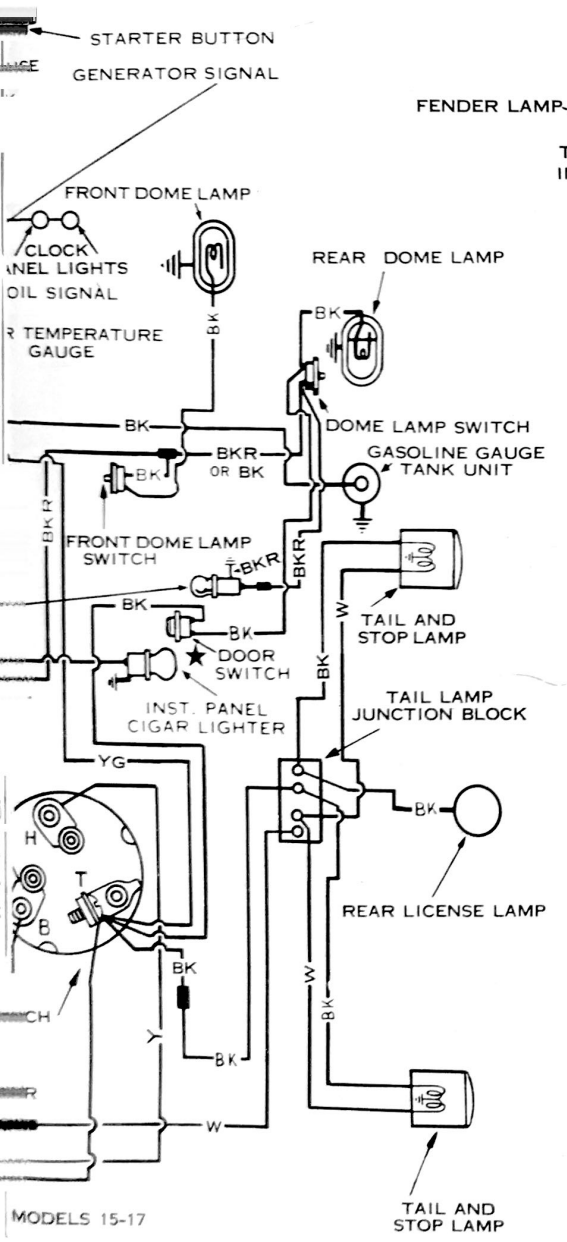

WIRING FOR AUTOMATIC VACUUM CLUTCH CONTROL (OPTIONAL EQUIPMENT)

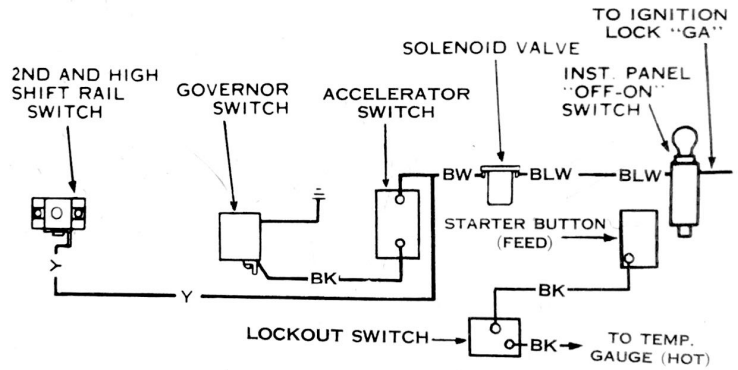

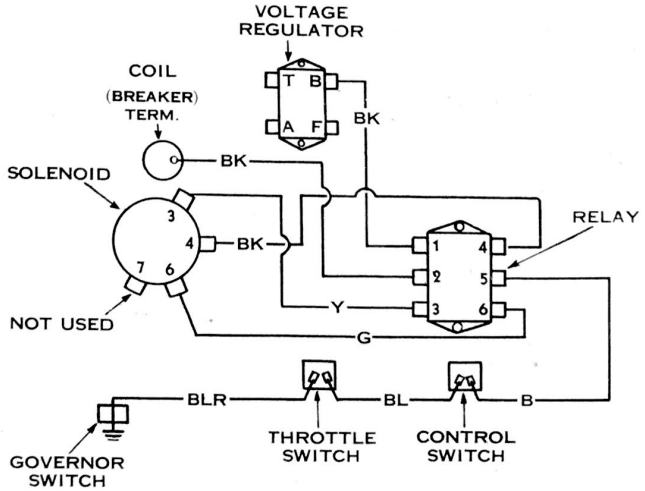

WIRING FOR OVERDRIVE (OPTIONAL EQUIPMENT)

range. This means that the generator cuts-in to start charging above the normal idling speed and the maximum output is reached at a slightly higher speed. This meets the requirements of cars operated at normal speeds and in the higher speed ranges.

SPECIAL GENERATOR GEG 4801 A with voltage regulator VRP 4008 A for slow or fast driving but with radio receiving and sending equipment, cuts in at 8-3/4 M.P.H. and reaches its peak output of 40 amperes at 17 M.P.H., remaining constant through the higher speed ranges. This means that this generator has sufficient output to assure the current requirements of cars equipped with radio receiving and sending equipment and who cruise at slow and high speeds.

SPECIAL AND STANDARD BATTERIES

It is recommended that the HT 19 plate National battery be used on all cars intended for special police work. If a longer life is desired then Kathanode batteries K1F (17 plate) or K2F (19 plate) may be used.

Makers Symbol	Plates	
HT17	17	Standard on 6 cyl. cars
HT19	19	Standard on 8 cyl. cars
K1F	17	Kathanode
K2F	19	Kathanode

SPECIAL GENERATOR REPAIRING

SPECIAL GENERATOR REPAIRING *is entirely different on these shunt type generators than on the standard equipment all of which are of the third brush regulated type.*

These special shunt wound generators are capable of delivering from 35 to 40 ampers hot and this maximum output is controlled by the current regulator which takes the place of the third brush. The advantage of the special generator is that when the battery is fully charged the generator rarely delivers more than 10 amperes, however when the lights and radio are turned on the current regulator permits an increase in generator output that is in proportion to their requirements.

SPECIAL GENERATOR OUTPUT TESTING requires an accurate Volt and Ampere Tester.

Disconnect the wire at the voltage regulator "B" terminal and connect the negative ammeter lead to the "B" terminal of the regulator and connect the positive ammeter lead to the terminal of the wire just disconnected.

Connect the negative voltmeter lead to the voltage regulator "B" terminal and connect the positive voltmeter lead to the ground.

Turn the resistance "out". Turn on all lights, radio and other electrical accessories.

Run the engine for several minutes or until the voltage remains constant.

Read the ammeter and check the maximum reading against the specifications of the particular unit being tested.

Turn off the lights, radio and other electrical accessories and remove the jumper wire.

Check the voltage at which the voltage regulator starts to operate.

When the generator is "Hot" the voltage should be 7.1 to 7.4 Volts at 70° F. If the reading is inaccurate or not according to this voltage then replace the regulator with a new one of the same type.

VOLT-AMMETER TESTER

The volt-ammeter tester KMO 330 is recommended for electrical tests.

Always connect a voltmeter in parallel (to the two points between which the difference in pressure is to be measured.

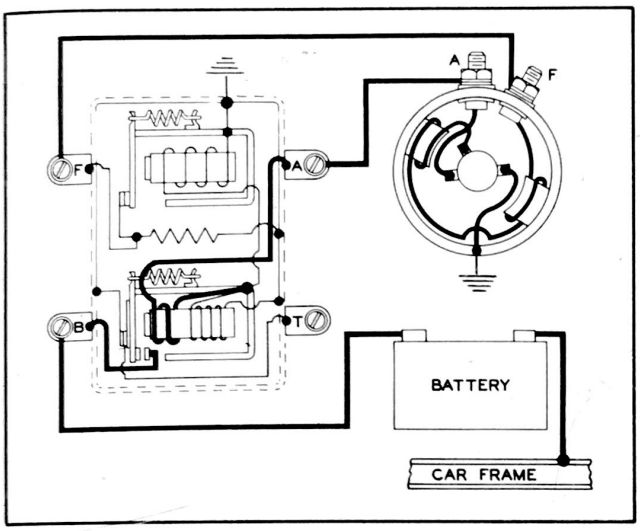

Figure 104 - Voltage Regulator to Generator Wiring Diagram

A voltmeter measures the electrical pressure available to cause current to flow and by connecting the voltmeter at a point of high electrical pressure and at a point of low electrical pressure the difference in pressure is measured between the two points.

AMMETER TESTING. Always connect an ammeter in series in the circuit in which the current flow is to be measured because it is a measure of the quantity of current that is flowing and therefore, must be connected so that the current flows through it.

VOLTAGE REGULATOR

The voltage regulator includes two individual units in the one housing.

The circuit breaker which closes the circuit between the generator and battery when the generator is charging and opens the circuit when it is not charging.

The voltage regulator which holds the voltage of the system constant within very close limits.

The maximum current of the generator is controlled by the conventional third brush action.

The voltage regulator unit is temperature compensated by means of a nickel iron magnetic by-pass across the top of the regulator unit. The by-pass allows more of the magnetic flux to pass through it when cold than when it is hot. This affects the amount of flux needed to operate the contact points and causes the points to operate at a higher voltage under cold conditions than when operating under hot conditions. This compensation is needed to offset the variations in battery characteristics due to temperature changes.

By selecting this pre-determined voltage point at which the regulator is set, a high voltage condition which may cause burned ignition points, burned out bulbs, damage to radio and other electrical devices is prevented.

The voltage regulator has a single winding which is connected directly across the generator brushes, see Fig. 104. When generator voltage reaches the value for which the regulator is set 7.1 to 7.4 volts at 70° F., the regulator armature vibrates, opening and closing the regulator contact points.

The circuit breaker points should close at 6.4 to 7.00 volts. Points should open between 2 to 6 amperes discharge.

A carbon resistor marked 30, with resistance of 28 to 32 ohms is attached to back of regulator.

Regulators that do not check or operate properly should be exchanged through an Authorized Electric Auto-Lite Service Station. DO NOT attempt to adjust the instrument. The cover is sealed and the seal should not be broken.

GENERATOR CHARGING RATE CHECK. Disconnect "BAT" lead at "B" terminal on voltage regulator, see Fig. 105.

Connect positive ammeter lead to terminal of wire just disconnected - negative ammeter lead to "B" terminal on regulator.

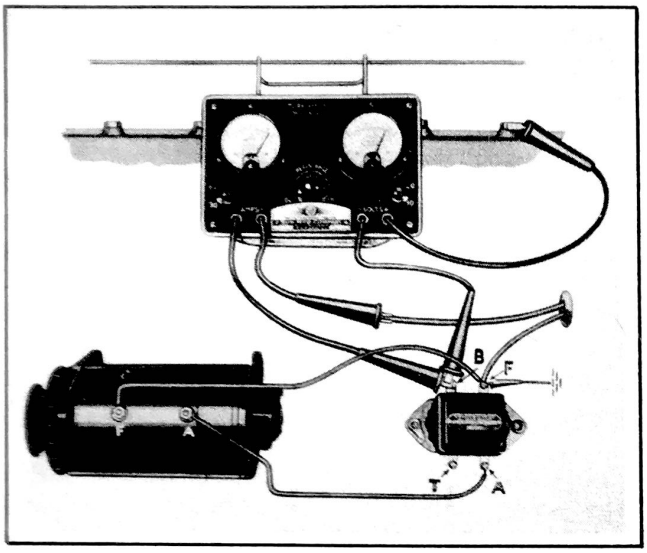

Figure 105
Checking Generator Charging Rate

Connect negative voltmeter lead to "B" terminal on regulator - positive voltmeter lead to ground on engine.

Connect jumper wire to "F" terminal on regulator and ground on engine.

Run engine at speed corresponding to 20 M.P.H. for 15 minutes to warm up.

With resistance turned "out" and engine running at speed corresponding to 35 M.P.H., at 8 volts, generator charging rate should be not less than 27 amperes on Models 10 and 18, see Fig. 109. On all other models charging rate should be not less than 34 amperes, see Fig. 110. Adjust third brush in a counterclockwise rotation to increase output.

VOLTAGE REGULATOR CHECK. Disconnect "BAT" lead at "B" terminal on voltage regulator, see Fig. 106.

Connect positive ammeter lead to terminal of wire just disconnected - negative ammeter lead to "B" terminal on regulator.

Connect negative voltmeter lead to "B" terminal on regulator - positive voltmeter lead to ground on engine. Omit jumper wire from regulator to ground.

Run engine at speed corresponding to 20 M.P.H. for 15 minutes to warm up.

Run engine at speed corresponding to 35 M.P.H. Turn "in" resistance until ammeter reads 10 amperes.

With regulator at temperature of 70° F. the voltmeter reading must not be less than 7.1 volts or more than 7.4 volts.

If the reading is not within this range, the regulator should be replaced with a new or exchanged unit of the same type obtained from an Authorized Electric Auto-Lite Service Station. DO NOT ADJUST.

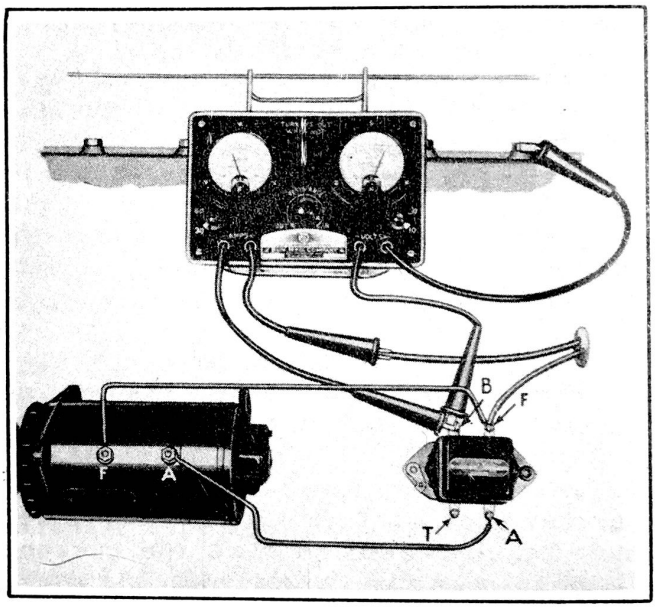

Figure 106 - Checking Voltage Regulator

GENERATOR TUNE-UP

The tune-up inspection includes an inspection of--

Commutator condition.
Brush condition.
Bearings for wear.
Connections throughout charging circuit.
Generator output.
Generator and line voltage.

Commutator that is dirty or discolored can be polished with No. 00 sandpaper. If worn or rough so that the mica and copper bars are nearly even or if the brushes are badly worn, it is best to remove the generator for repairing on the bench.

The bearing at the commutator end is an absorbent bronze plain bearing and can be checked for wear by lifting on the armature for noticeable play.

Clearance should be .001" to .0025".

The bearing at the drive end is a ball bearing and should be replaced if loose.

Lubrication is by means of hinged top oilers over the bearings at each end. Use light engine oil and a few drops is sufficient every 2,000 miles.

GENERATOR

GENERATOR DISASSEMBLING. Remove generator from the car and perform all work on the bench.

Place the generator in a bench vise and use the vise as a holding fixture. Do not pinch the generator frame.

Remove the generator pulley using pulley J 354. It is held by the armature shaft nut and woodruff key. See Fig. 107. Remove the commutator cover band, brush lead screws, two through bolts and commutator end plate assembly.

Remove the drive end head with armature.

Remove the screw nuts holding the drive end head bearing retainer, drive end head bearing felt washer and felt guard.

The drive end ball bearing should be removed with puller tool J 354 as the use of this puller will prevent damage to the bearing and armature.

GENERATOR OVERHAUL and inspection after disassembling will possibly show that the commutator will need turning and undercutting.

When undercutting be sure to undercut the mica squarely; the full depth of the slot and 1/32" deep.

The commutator end bearing should be thoroughly checked for wear. The drive end bearing should be thoroughly cleaned and should be packed not over one-half full with high temperature grease before reassembly in the drive end head.

When new brushes are installed, they should be carefully sanded in so as to have at least a 75% bearing on the commutator and then run in long enough to have a perfect fit before any attempt is made to set the generator output.

Check to determine that the brush holder springs have enough tension to hold the brushes snugly against the commutator. This should be 53 ounces maximum with new brushes measured by J 544 checking scale.

After assembling, the generator should be given a complete bench test before being installed on the car. While testing, *set the third brush for the correct maximum output.* See specifications on page 89, for the generator that is being tested.

GENERATOR FIELD COIL TEST FOR CONTINUOUS CIRCUIT. Place the test prods of tester HMO 909 on the field coil leaks. If the test lamp does not light the field coils are open circuited and should be replaced.

GENERATOR FIELD COIL TEST FOR GROUND. Place test prod leads, one to the ground and the other to the field coil terminal. If the test lamp lights, the field coils are grounded and should be replaced. If the test lamp does not light the field coils are satisfactory.

FIELD COIL ASSEMBLY TEST.

Battery Voltage	Amperes Maximum	Draw Minimum
6.0	1.82	1.65
6.8	2.07	1.87
7.2	2.19	1.98
7.6	2.31	2.09

GENERATOR FIELD COIL BALANCING TEST. This test is made with a battery, an ammeter,

and two leads. Slide the insulation off the soldered connection between the two field coils. Place on test lead to the soldered connection and the other to one end of the field coil. Take a reading on the ammeter. Remove the lead from the end of the field coil and place it on the end of the other coil and take a reading.

If one field coil draws more current than the other, there is an internal short in the field coil and the coil that draws the most current should be replaced.

GENERATOR BRUSH LEAD TO GENERATOR POSITIVE TERMINAL TEST FOR CONTINUOUS CIRCUIT. Place test prods, one on the end of brush lead wire and the other on the positive terminal. If the test lamp lights, the wire is satisfactory. If the test lamp does not light, the wire is open circuited and should be replaced.

GENERATOR POSITIVE TERMINAL TEST FOR GROUND. Place one test prod on the positive terminal and the other on the generator frame. If the test lamp lights, the terminal insulation is broken down and should be replaced. If the lamp does not light the insulation is satisfactory.

GENERATOR MAIN AND THIRD BRUSHES - TEST FOR GROUND. Place the test prod leads, one to ground and the other to the brush. If the test lamp lights the brush holders are grounded and should be replaced. If test lamp does not light the brushes are satisfactory.

GENERATOR COMMUTATOR END BEARING LIFT. Check the fit of the armature shaft in the bronze bearing at the commutator end. This should have a clearance of .001" to .0025".

GENERATOR ARMATURE TEST FOR GROUND. Place the test prod leads, one to the armature core and the other to the commutator bars. If the test lamp lights the armature is grounded and should be replaced. If the test lamp does not light the armature is satisfactory.

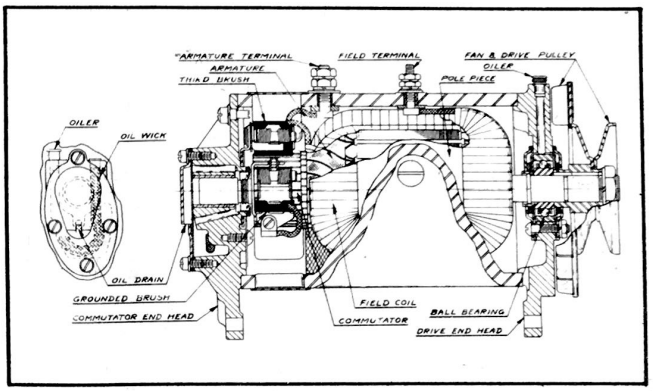

Figure 107
Generator - GDS-4801A - Models 10, 18

GENERATOR ARMATURE TEST FOR SHORT. Place the armature on the growler and with a saw blade over the armature core and on the bars rotate the armature and test. If the saw blade vibrates, the armature is short circuited.

In order to determine whether the armature windings or the commutator is shorted, clean out between the commutator bars and recheck the armature. If the saw blade still vibrates the armature is short circuited and should be replaced.

GENERATOR COMMUTATOR. Check the commutator for roughness and if it is rough, turn it down on a lathe until it is thoroughly cleaned up after which sand it off with 00 sandpaper. Undercut the mica and again check on the growler.

GENERATOR ARMATURE LUBRICATION. Before assembling the armature and commutator end plate, remove the felt wick. Oil the armature shaft and soak the felt wick in light engine oil. Replace the wick and make certain the felt wick lays on the bottom of the oil pocket and fill the oiler with light engine oil until the oil pocket is filled to the overflow hole.

GENERATOR DOES NOT SHOW CHARGE. Connect an ammeter in series with the voltage regulator. Remove the battery wire from the "B" (battery) terminal of the voltage regulator and connect the positive lead of the ammeter to the "B" (battery) terminal of the regulator and the negative lead to the battery wire.

Ground the regulator field terminal (F) with a screw driver or jumper lead while the engine is running at a speed equivalent to a road speed of 30 to 35 miles per hour.

If the generator charges satisfactorily with the "F" (field) terminal grounded then the trouble is in the voltage regulator. Replace the generator - DO NOT Break the Seal.

If the generator does not charge with the "F" (field) terminal on the regulator grounded, keep the regulator "F" (field) terminal grounded and remove the lead "A" from the generator terminal of the regulator and touch it against a ground such as the engine block. If no spark occurs the trouble is in the generator. If a spark occure the regulator is at fault.

GENERATOR REASSEMBLING. Assemble the drive end bearing, the retainer, felt washer and felt guard to the head. Place drive pulley on armature shaft and place the lockwasher and nut on the end.

Turning the armature shaft end nut will force the bearing and pulley onto the shaft without any necessity of pounding on the shaft which might prove very injurious.

Assemble the armature and drive end assembly to the generator frame. Assemble the commutator end frame assembly, the through bolts and connect up the brush leads.

GENERATOR LUBRICATION. The front and rear bearing oilers (A and B), Fig. 108 should be lubricated with a few drops of light engine oil every 2,000 miles. *Be careful not to over-oil as too much lubricant may damage the field coils and brushes.*

FAN BELT ADJUSTMENT. The generator pulley is driven by the "V" type fan belt. To prevent slippage and overloading the generator bearings and water pump bushings it is essential that the fan belt be adjusted to provide 3/4" slack in the belt, measured between the fan pulley and generator pulley as shown at "C", Fig. 108.

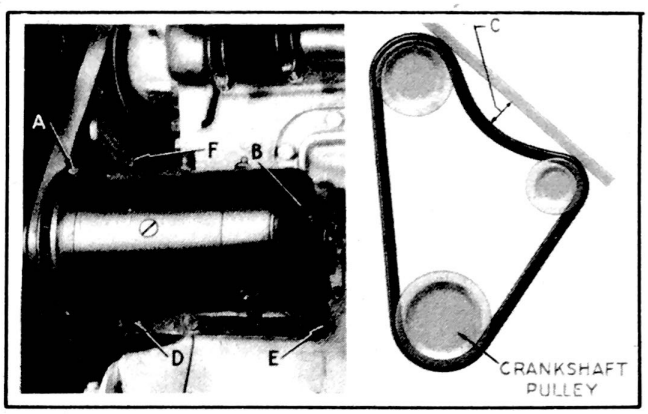

Figure 108 - Generator Lubrication and Fan Belt Adjustment

A. Lubricate - light engine oil - at 2000 miles.
B. Lubricate - light engine oil - at 2000 miles.
D. Bracket bolt nut.
E. Bracket bolt nut.
F. Adjusting arm nut.

To adjust, if necessary, loosen mounting bracket nuts (D, E and F) and swing generator to the right (toward the engine) to decrease tension, or to the left (away from engine) to increase tension.

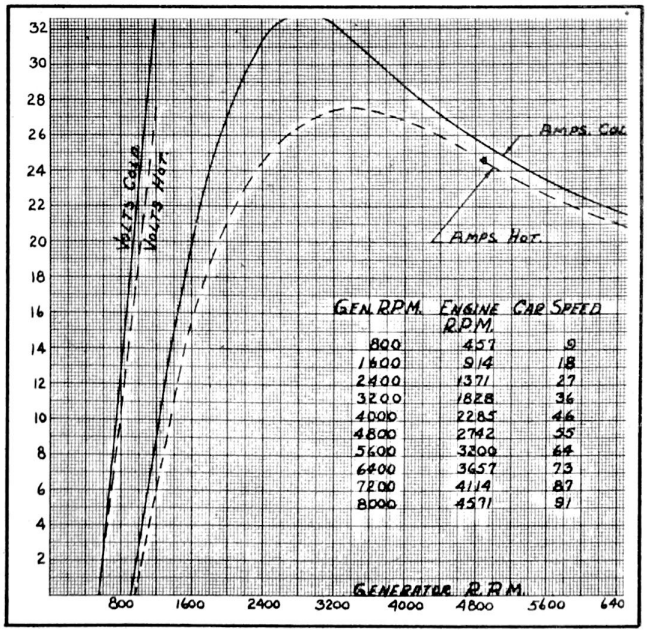

Figure 109
Generator Charging Curve - Models 10, 18

GENERATOR TEST RUNNING AS A MOTOR. Using a storage battery, an ammeter and the generator to be tested, connect the field terminal to ground using a jumper lead. Place negative lead of battery on the generator armature "A" terminal and the positive to ground. This will operate the generator as a motor.

See specifications on page 89 for motorizing draw on type of generator being tested.

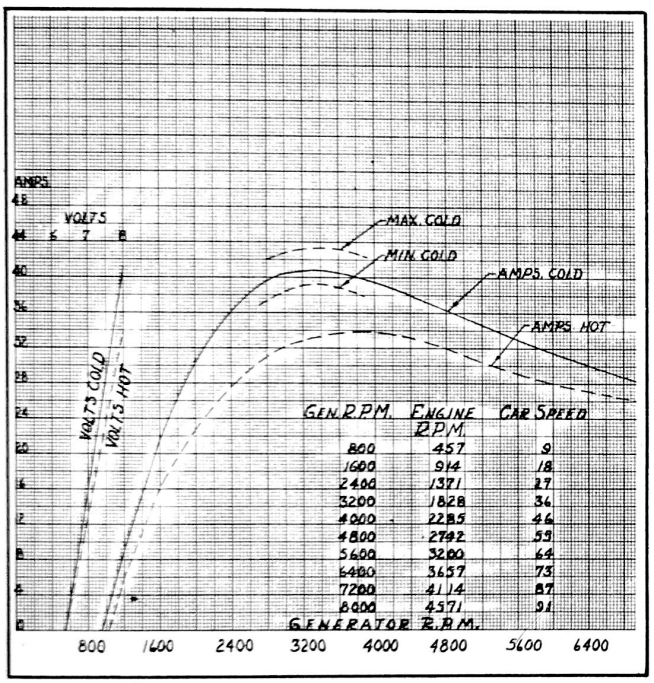

Figure 110 - Generator Charging Curve Models 11, 12, 14, 15, 17

GENERATOR POLARITY. To prevent the generator polarity being reversed, the generator should be "flashed". Flashing is done by connecting a jumper wire to the starting motor battery terminal and tapping it several times against the "A" terminal of the generator.

To check the generator after flashing it, start the engine and speed it up. The generator charge indicator light should go out and stay out as long as the engine is running above idle speed. Turn off the ignition until the engine stops, then turn it on again. The generator charge indicator light should turn on, indicating that the circuit breaker points are not stuck.

BATTERY

Model	Makers Symbol	Plates	Length
6 cyl.	HT17	17	10 9/16"
8 cyl.	HT19	19	11 3/4"

	Width	Height	Terminal Grounded
6 cyl.	7-1/4"	7-13/16"	Positive
8 cyl.	7-1/4"	7-13/16"	Positive

LOCATION is in the engine compartment just back of the radiator core on the left side, under the bonnet.

BATTERY CARE AND FILLING are very important because keeping a battery fully charged and the water level at least 3/8" above the plates will add many months to its life.

The specific gravity measured with a hydrometer syringe should always be between 1250 and 1290 at 70 degrees F. If the battery is allowed to remain in a low state of charge the plates will sulphate and shorten its life.

Distilled water should be added at least once a month and the water level maintained at least 3/8" above the plates. In hot weather water should be added every two weeks. Water should not be added in cold weather in a cold garage as the added water will float and freeze. Water should be added just before driving the car because the charging action mixes it with the battery solution.

Check the battery hold-down bolts and battery connections and keep them tight.

Clean corrosion off the terminals and cable.

BATTERY CAPACITY CHECK WITH VOLTMETER. Check hydrometer gravity; reading should be 1250 to 1290 at 70 degrees F.

Connect the positive voltmeter lead to the positive battery terminal and the negative voltmeter lead to the negative battery terminal as shown in Fig. 111.

Without any current draw the voltmeter reading should be 6 to 6-1/2 volts and if the gravity or voltage is low the battery should be recharged.

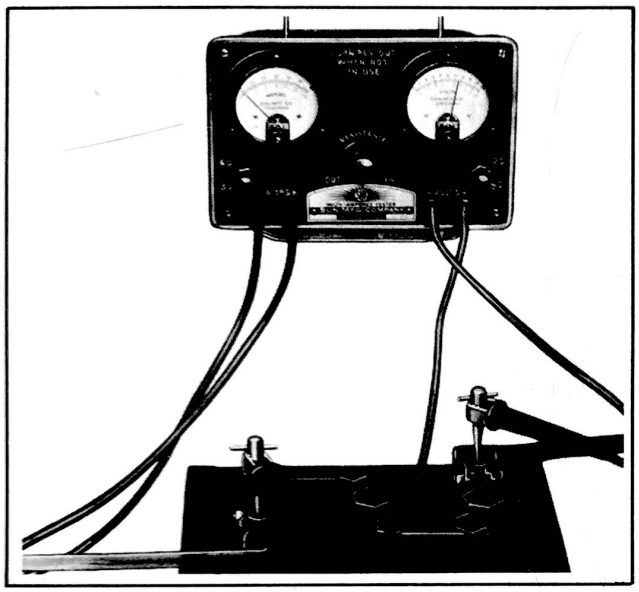

Figure 111 - Checking Battery Capacity

STARTING MOTOR

STARTING MOTORS on all models are operated by a solenoid switch mounted on top of the starting motor case, controlled by a push button located on the instrument panel. The ignition lock must be "on" to operate.

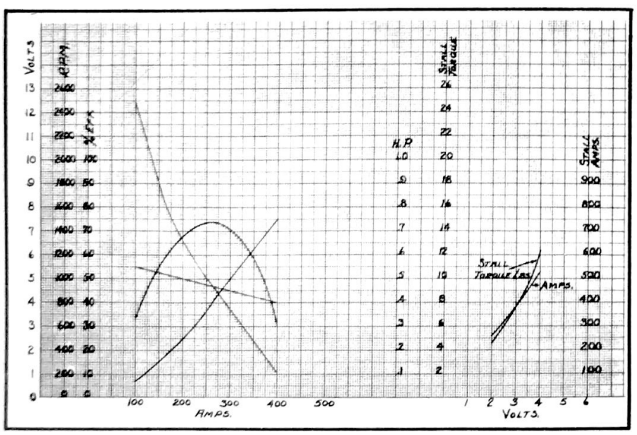

Figure 112 - Starting Motor Torque
Models 10, 11, 12, 18

An inboard Bendix drive is assembled on the end of the starting motor armature shaft which operates in two absorbent bronze bearings. Each bearing is provided with a separate oiler - the front oiler being of the swinging cover type and the rear of the hinged top design.

The starting motor used on Models 10, 11,12 and 18, illustrated in Fig. 115, is of 4 inch diameter and the unit used on Models 14, 15 and 17, shown in Fig. 116, is 4-1/2 inches in diameter.

STARTING MOTOR COMPLETE INSPECTION.

Removal of starting motor.
Disassembly of starting motor.
Truing up commutator.
Installing of new brushes if needed.
Check for worn bearings.
Inspection of the Bendix drive for worn parts or distorted spring.
Check of starting switch and starting circuit.

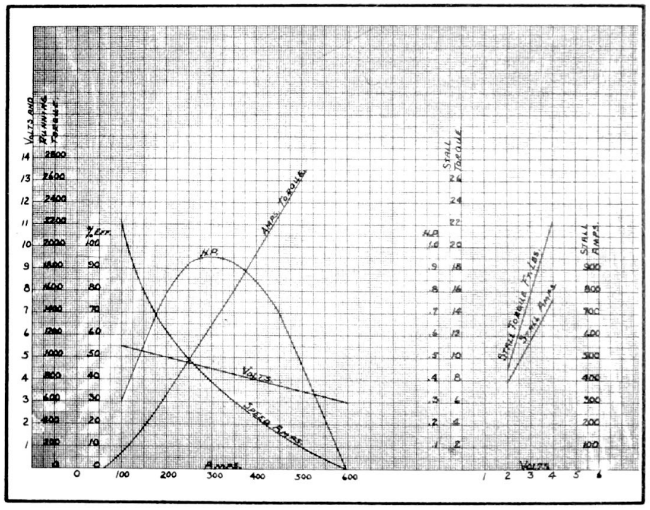

Figure 113 - Starting Motor Torque
Models 14, 15, 17

STARTING MOTOR TUNE-UP should include a check of the brushes and commutator, cleaning of the commutator, a check of the bearings for wear and lubrication of the bearings.

The starting switch should be given a voltage drop test for possible burnt contacts.

The starting circuit should also be given a voltage test to be sure there is no loss of starting motor efficiency due to poor or corroded connections or improperly soldered terminals. In making this check particular attention should be given the ground connection.

STARTING MOTOR LUBRICATION. All starting motor commutator end bearings are provided with an oil hole accessible by swinging the oil hole cover to one side. This oil hole is located on the end of the bearing housing. A hinged top oiler is located at the drive end for lubrication of the drive end bearing. Add a few drops of light engine oil in each oiler every 2,000 miles. *Avoid over-oiling so as not to damage brushes and field coils.*

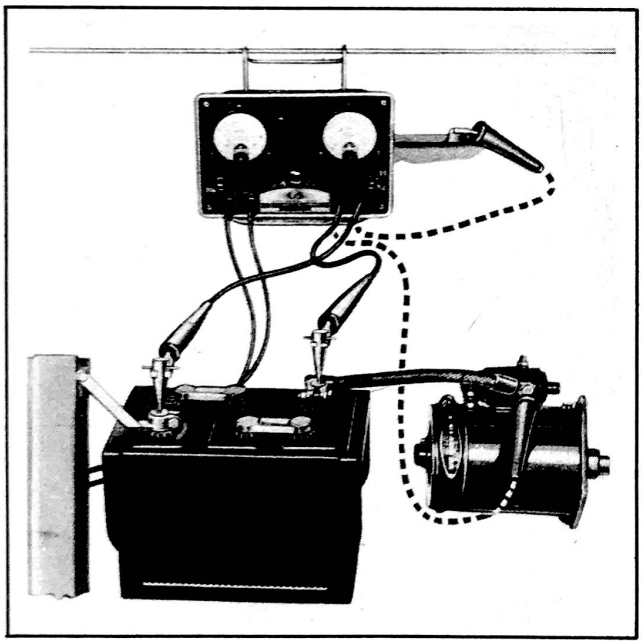

Figure 114 - Checking Battery Voltage Drop - Starter System

STARTER SYSTEM CHECK, BATTERY VOLTAGE DROP. Connect the positive voltmeter lead to the positive battery terminal and negative voltmeter lead to the negative battery terminal as shown in Fig. 114. Turn ignition off and have engine cranking. Read voltage.

Connect positive voltmeter lead to ground on engine and negative voltmeter lead to the starting motor switch "Bat" terminal. Turn ignition off and have engine cranking. Read voltage.

The difference between the first and second readings should not be greater than one fourth volt. If it is greater than that then check the battery cables and cable connections. Also check and tighten screws at the fuse block "B" terminals; voltage regulator "B" terminal and starter switch "Bat" terminal.

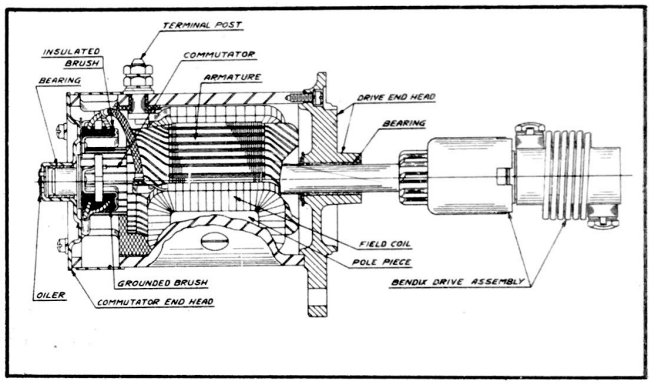

Figure 115
Starting Motor, MZ-4079, Models 10,11,12,18

STARTING MOTOR COMMUTATOR. Inspect the commutator for roughness. If it is rough, turn down on a lathe until it is thoroughly cleaned up and sand off the commutator with OO sandpaper.

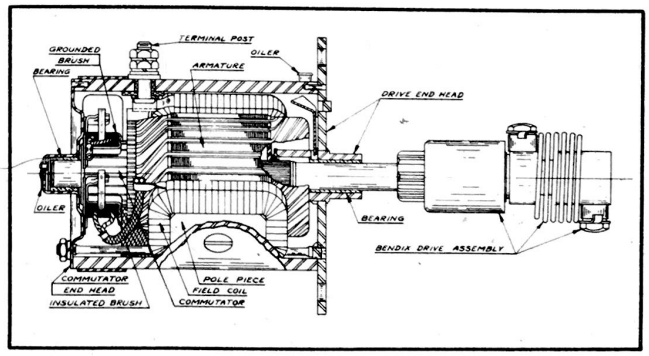

Figure 116
Starting Motor - Models 14, 15, 17

STARTING MOTOR ARMATURE END PLAY. There should not be over 1/16" maximum end play in the armature.

CHECKING BATTERY CABLE AND CABLE CONNECTIONS. Connect positive voltmeter

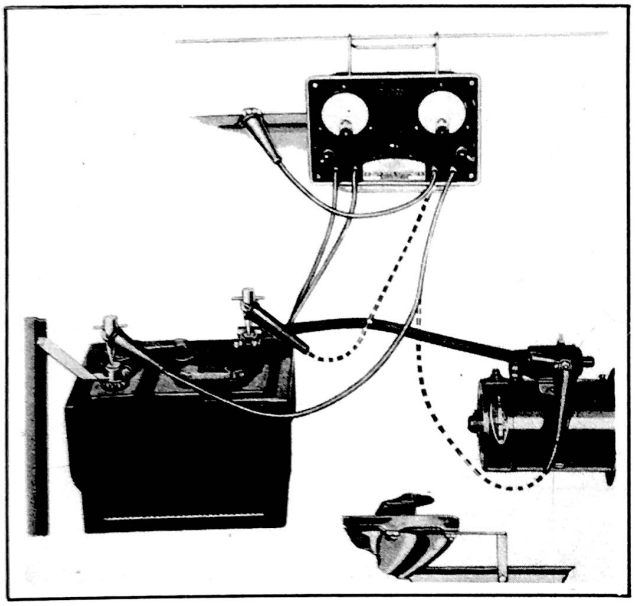

Figure 117 - Checking Battery Cable and Cable Connections

lead to positive battery terminal and negative voltmeter lead to ground on engine, see Fig. 117.

With engine cranking, voltage reading should not be more than .1 volt. If higher than this, check positive battery cable connection at battery terminal; ground strap tightness and engine to frame ground connections.

Connect positive voltmeter lead to "BAT" terminal of starting motor switch-negative voltmeter lead to negative battery terminal.

With engine cranking, voltage reading should not be higher than .1 volt. If higher than this, check negative battery cable connection at "BAT" terminal of starting motor switch.

If cranking speed is slow it indicates starting motor switch trouble. Check starting motor switch.

STARTING MOTOR SOLENOID SWITCH. The starting switch is operated by the push button on the instrument panel and also has a small button located on the front end of the solenoid switch to permit turning the engine over when checking timing or replacing the HUDSONITE clutch compound, and can only be operated with the ignition switch "on".

STARTING MOTOR SWITCH CHECK. Connect positive voltmeter lead to starting motor terminal of solenoid switch - negative voltmeter lead to "BAT" terminal of solenoid switch, see Fig. 118.

Crank engine with starter. Voltmeter reading should not be more than .2 volt. If more than this check connections or replace switch.

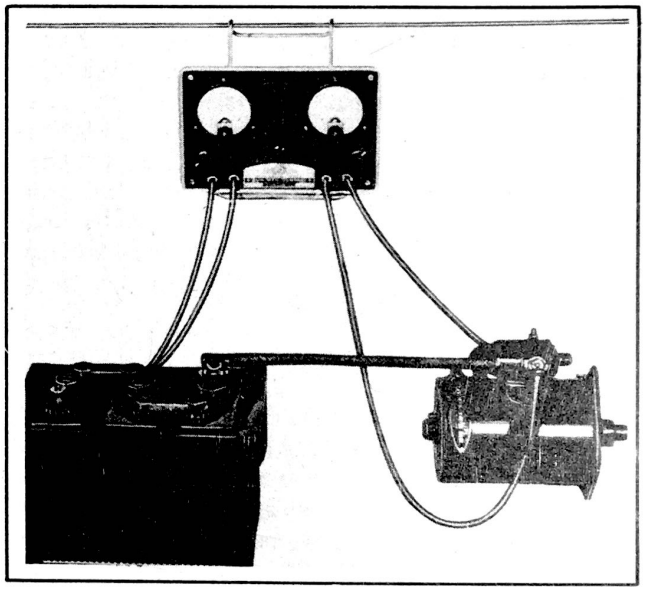

Figure 118
Checking Starting Motor Switch

STARTING MOTOR REMOVAL. Remove the battery cable and battery wire from the solenoid starting switch.

Tape the end of the cable to prevent shorting and possible fire.

Remove starting motor mounting stud nuts.

STARTING MOTOR DISASSEMBLING AND ASSEMBLING. Remove the starting motor solenoid switch; commutator cover band; through bolts; and rear drive end head.

Remove the field coil to brush lead screws and remove the commutator and plate assembly and armature.

To reassemble, reverse procedure of removal.

STARTING MOTOR INSULATED AND BRUSH HOLDER TEST FOR GROUND. Place one test prod lead to the cover and the other on the brush holder. If the test lamp lights the brush holder is grounded and must be replaced. If the test lamp does not light the brush is satisfactory.

To replace the insulated brushes, unsolder the brush pigtail from the field coil and remove the brush. When inserting the pigtail of the new brushes it will be necessary to open up the loop slightly in the field coil. Be sure the pigtail is inserted the full depth of the loop after which it should be clinched to hold the pigtail securely before resoldering. A good soldering job must be done to give full efficiency.

STARTING MOTOR GROUNDED BRUSHES. Check the rivets holding the brush holders and brush ground strip to the commutator end plate. The rivets must fit the holes snug and tight so as to hold the brush holder firmly in place and make a positive ground connection for the brushes.

BENDIX DRIVE

BENDIX DRIVE CONSTRUCTION. All parts of the drive mechanism except the drive spring are located within the pinion barrel, see Fig. 119.

The threaded sleeve is mounted loosely on an extension of the drive head and is retained by the stop nut which is screwed and staked in place on the outer end of the head.

The pinion is integral with the barrel or drive sleeve and is mounted loosely on the starter shaft.

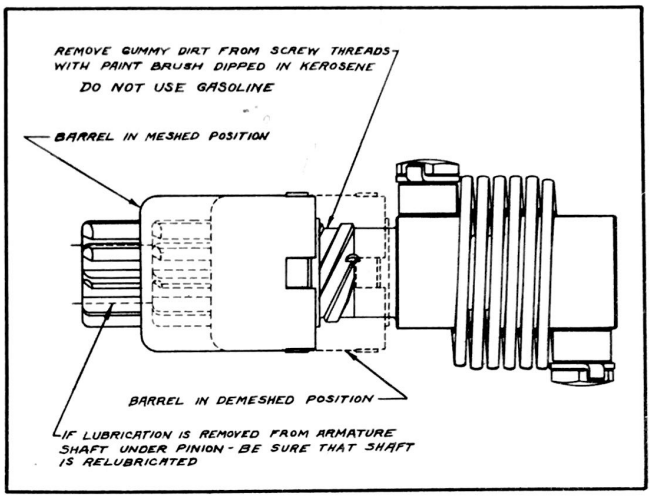

Figure 119 - Bendix Drive

The starter drive is through lugs on the control nut or driving ring on the screw shaft which engage slots in the end of the pinion barrel.

The pinion barrel is held in place on the control nut by a locking ring within the end of the barrel directly behind the driving lugs.

A coil type anti-drift spring is mounted on the threaded sleeve ahead of the control nut and a meshing spring is located within the head of the barrel ahead of the drive head stop nut.

BENDIX DRIVE OPERATION. The pinion, barrel and control nut operate as a unit so that the pinion is moved out into mesh with the flywheel gear as the control nut is threaded along the threaded sleeve.

If the pinion teeth strike the ends of the flywheel teeth, the free longitudinal movement of the threaded sleeve on the drive head allows the pinion to turn slightly and mesh properly.

This free movement is important to insure correct meshing and to prevent jamming pinion with damage to the drive and flywheel teeth.

BENDIX DRIVE ADJUSTMENTS. If the pinion jams or does not mesh properly with the flywheel gear teeth check the following:

Armature shaft rough or burred, dirty or rusty under the threaded sleeve.

Remove Bendix and clean and smooth shaft. Lubricate lightly with S.A.E. 10 engine oil before replacing.

Armature shaft rough, burred or dirty under Bendix pinion.

Thread pinion back on threaded sleeve (demeshed position) smooth the shaft with emery cloth or clean with kerosene (do not use gasoline). Lubricate shaft lightly with S.A.E. 10 engine oil.

Armature shaft bent.

Remove Bendix drive and check shaft-straightening if possible otherwise replace.

Drive spring screw at threaded sleeve end is too long.

See that spring does not project through the sleeve and bind on drive head extension or armature shaft.

Cocked or deformed drive spring.

This will cause threaded sleeve to drag on armature shaft or on drive head extension.

Remove spring by taking out spring screws, examine spring, replace if necessary. Spring eye centers should be at right angles to spring axis. Use new lockwashers under spring screw heads when replacing screws and see that one lip of washer is turned down in spring eye gap and other lip is turned up against screw head, flat.

BENDIX STARTER DRIVE CLEANING. In cases where the Bendix drive fails to engage with the flywheel gear in cold weather the reason is probably gum and dirt or frost on the screw threads of the Bendix drive.

Clean as follows:

Press the starter button and release, quickly repeating until the Bendix pinion is fully meshed with the flywheel gear.

Use a paint brush dipped in kerosene and brush the screw threads back of the pinion rotating the pinion while brushing.

CAUTION: Use a very little kerosene and do not use gasoline because it removes all lubrication.

Start the engine several times so as to work the kerosene into the gum on the screw threads.

Remove excess kerosene after cleaning by brushing with a dry brush or wiping with a clean cloth.

With pinion rotated to demeshed position clean exposed portion of armature shaft with kerosene and then lubricate with S.A.E. 10 engine oil.

Do not apply any lubricant to the screw threads.

DISTRIBUTOR

The gear for driving the distributor is an integral part of the camshaft and is cut with a left hand spiral. This gear meshes with the distributor shaft drive gear which is riveted to the lower end of the distributor shaft.

The end play at the lower or gear end of the distributor shaft is .005" to .010".

The distributor drive shaft and support assembly is locked in place with a special anchor bolt. The distributor support is further supported by a plate held in place by two cylinder head stud nuts. Two oilless bearings are used, one at the bottom and the other near the top.

The distributor drive shaft is slotted off of center at the top to prevent incorrect installation.

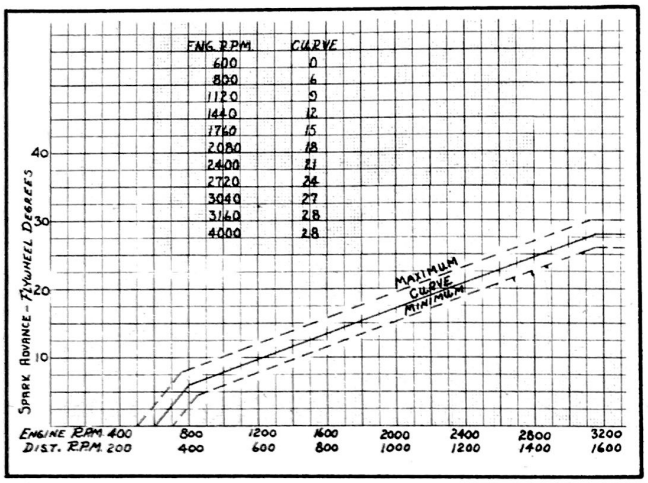

Figure 120 - Automatic Spark Advance Curve - 6 Cylinder Models

DISTRIBUTOR FOR 6 CYL. MODELS is of six lobe type, with automatic as well as vacuum advance. *Rotation is counter-clockwise (viewed from above). Firing order is 1-5-3-6-2-4.*

The vacuum chamber (A) contains a spring loaded diaphragm, which is connected to a graduated quadrant (H), through arm (C). The diaphragm is actuated by intake manifold vacuum through a copper tube connected to the carburetor body with an opening in the port, near the throttle valve. Under light operating conditions, when maximum manifold vacuum is available the diaphragm is drawn forward against the diaphragm spring advancing the ignition timing. As the engine is placed under wide-open throttle or heavy load operation and manifold vacuum drops, the diaphragm spring reacts against the diaphragm, retarding the ignition timing, thereby eliminating fuel detonation and providing maximum efficiency.

Fifteen degrees additional advance is provided over the automatic centrifugal advance. Since the extra 15° advance would result in poor idling, the vacuum is taken from a position in the carburetor barrel which is above the throttle in the idling position, thus retarding the ignition.

DISTRIBUTOR - 8 CYL. MODELS, is located on the right side of the engine. The distributor is of eight lobe type, with automatic advance. *Rotation is clockwise (viewed from above). Firing order is 1-6-2-5-8-3-7-4.*

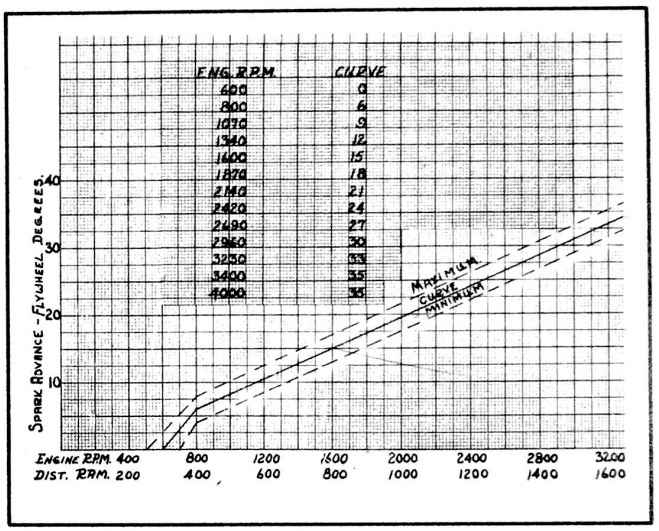

Figure 121 - Automatic Advance Curve - 8 Cylinder Models

DISTRIBUTOR COMPLETE INSPECTION. The complete inspection should include the removal of the distributor from the engine, complete dismantling and cleaning, an inspection of the bearings and breaker cams for wear. A check of all points

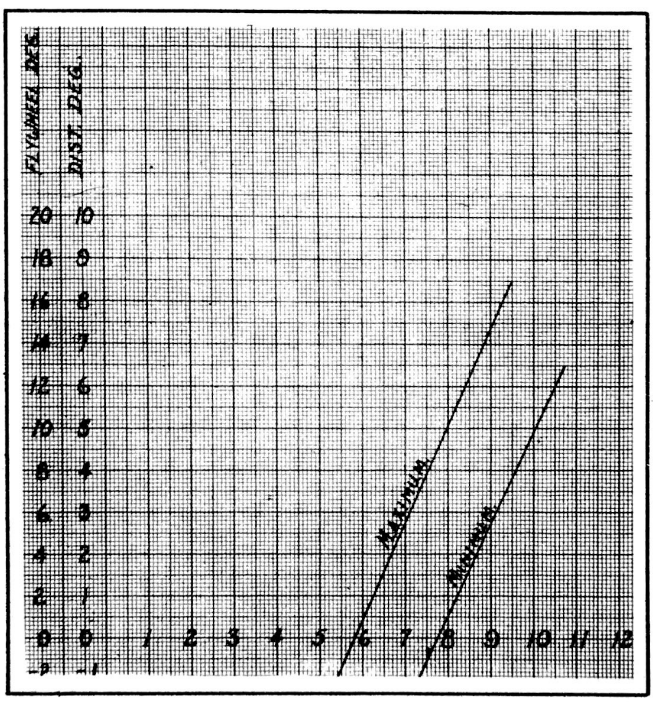

Figure 122 - Distributor Vacuum Advance Curve - 6 Cyl. Models

mentioned in the tune up inspection. The bearings in the distributor housing should be thoroughly cleaned and then lubricated before assembling the drive shaft in the housing, see Fig. 127 and 128.

The distributor should have a complete resetting of the timing to the engine after reassembling and final reinstallation.

No attempt should be made to check or adjust the automatic governor except with an oscillograph because with this instrument only, can the occurrence of the spark in degrees be checked against the speed in R.P.M.

In order to obtain the correct dog-leg governor advance curve, care must be taken that the weight springs are not interchanged. When correctly installed the heavier spring is mounted on the spring lug which has the flat auxiliary spring in back of it.

The tension of the flat auxiliary spring is 5 to 6 ounces.

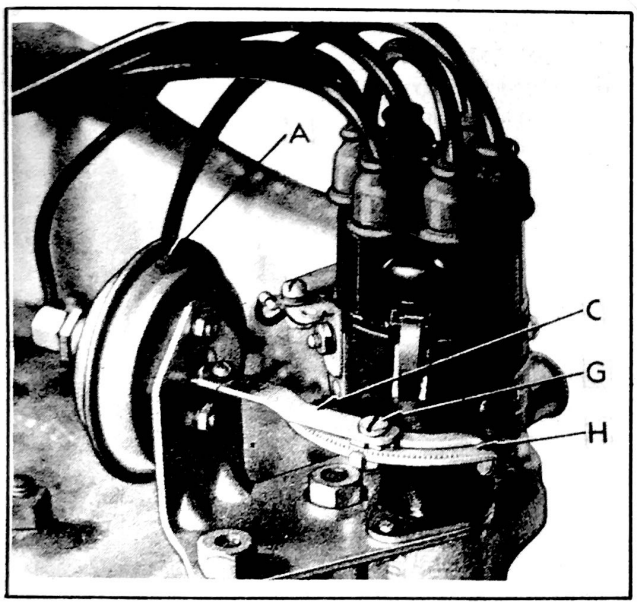

Figure 123
Distributor Mounting - 6 Cylinder

DISTRIBUTOR LUBRICATION - 6 CYL. MODELS. Every 2,000 miles a few drops of light engine oil should be applied to shaft wick (E), Fig. 124. Also apply one drop

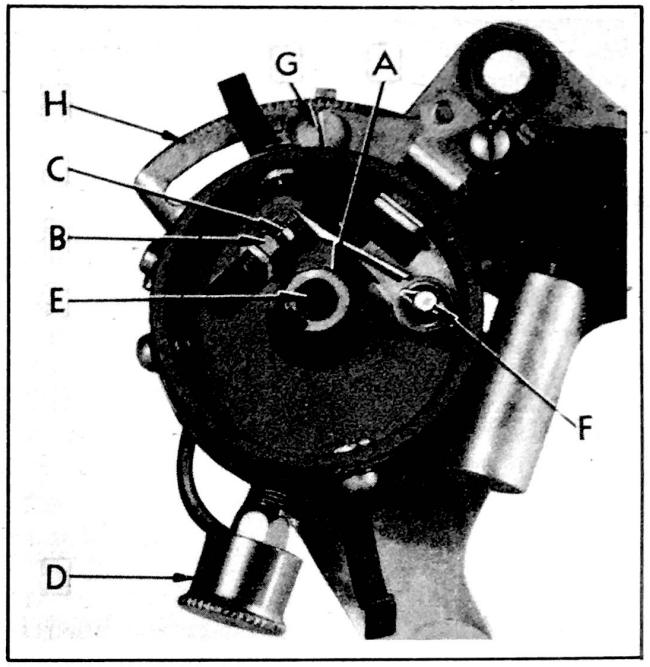

Figure 124 - Distributor - 6 Cyl.

of light engine oil to the breaker arm pivot (F). Apply a light coating of high temperature grease to the cam lobe (A). Turn grease cup (D) one turn.

Every 5,000 miles refill the grease cup with high temperature grease.

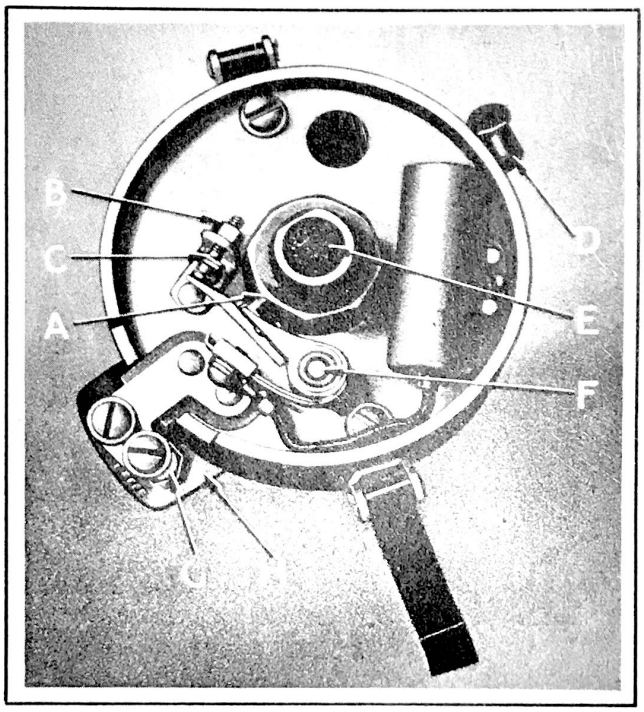

Figure 125 - Distributor - 8 Cyl.

Whenever the distributor is removed from its support, a generous coating of water pump lubricant should be applied to the distributor shaft housing before it is reassembled in the support.

DISTRIBUTOR LUBRICATION - 8 CYL. MODELS. Every 2,000 miles insert a few drops of light engine oil in oiler (D), Fig. 125, and shaft wick (E). Also apply one drop of oil to contact arm pivot (F). Apply a light coating of high temperature grease to cam lobe (A). Avoid over-oiling.

BREAKER POINT ADJUSTMENT - 6 CYL. MODELS. Remove distributor cap. Turn engine over until breaker arm fibre block (A), Fig. 124, is on the highest point of the cam. Points should be clean and smooth. Loosen lock nut (B) and turn adjusting screw (C) until .020" gap is obtained. After tightening lock nut, recheck gap.

BREAKER POINT ADJUSTMENT - 8 CYL. MODELS. Remove distributor cap. Turn engine over until breaker arm fibre block (A), Fig. 125, is on highest point of cam. Points should be clean and smooth and make full contact. Loosen lock nut (B) and turn adjusting screw (C) until .017" gap is obtained. After tightening lock nut, recheck gap.

DEGREES IN A FLYWHEEL TOOTH. There are 134 teeth in the flywheel ring gear and this means that one flywheel gear tooth is equal to approximately 2 2/3 degrees.

IGNITION TIMING SETTING - 6 CYL. MODELS. Ignition timing is 1/2" before top dead center.

Loosen the distributor advance diagraphm arm screw (G), Fig. 124, at the extreme rear end and turn the distributor housing counterclockwise to the limit of the slot in the quadrant.

Remove the central terminal from the distributor cap and place the bare end 1/8" from the cylinder head.

Turn ignition off and turn over the engine until the U.D.C. 1-6 mark on the flywheel is 1/2" before the pointer on the engine rear support plate. Make certain No. 1 cylinder is in firing position by removing No. 1 spark plug and placing a finger over the spark plug hole. When the air pressure against the finger indicates the piston is coming up on the compression stroke the No. 1 piston is in firing position.

Rotate the distributor body clockwise slowly just to the point where a spark jumps from the high tension wire to the cylinder block or if a timing light is being used turn the body until the light flashes.

Tighten the distributor advance arm screw (G), replace cable in distributor cap and replace the cap on the distributor.

When the distributor cap is in place, the metal strip on the rotor arm should be directly under number one spark plug terminal. The other cables should be in the cap terminals in the order 1-5-3-6-2-4 following in a counterclockwise rotation.

The cable in the center terminal of the distributor cap should go to the center (high tension) terminal of the ignition coil.

IGNITION TIMING SETTING - 8 CYL. MODELS. Ignition timing is on top dead center.

Loosen the distributor clamp screw (G), Fig. 125, and rotate the distributor housing clockwise to the limit of the slot in the clamping plate (H).

Remove the center cable from the distributor cap and place the bare end 1/8" from the intake manifold.

Turn ignition off and turn over the engine until the U.D.C. 1-8 mark on the flywheel is in line with the pointer on the engine rear support plate. Make certain that No. 1 cylinder is in firing position by removing No. 1 spark plug and

placing a finger over the spark plug hole. When the air pressure indicates the piston is coming up on the compression stroke the No. 1 piston is in firing position.

Rotate the distributor body counterclockwise slowly until a spark jumps from the high tension wire to the manifold, or if a timing light is being used turn the body until the light flashes.

Tighten the distributor advance arm screw (G). Replace the cable in the distributor cap and replace the cap on the distributor.

When the distributor cap is in place, the metal strip on the rotor arm should be directly in line with the terminal to which number one spark plug is attached. The other cables should be in the cap terminals in the order 1-6-2-5-8-3-7-4 following in a clockwise rotation.

The cable in the center terminal of the distributor cap should go to the center (high tension) terminal of the ignition coil.

FUEL AND ALTITUDE COMPENSATION. The procedure outlined in the foregoing paragraphs gives approximately normal timing for regular or non-premium fuels at or near sea level.

When Ethyl or premium fuels which have octane rating of 80 or higher as contrasted to regular brands of approximately 72 octane rating are used, a more advanced spark timing setting should be used and final tests should be made on the road. When operating at high altitudes it will be found that a more advanced spark timing setting can be used than at or near sea level.

To determine proper spark timing for these conditions, with engine at normal operating temperature, accelerate with full throttle from 8 M.P.H. in high gear. A ping should be noted at 10 to 15 M.P.H.

If no "ping" is heard, loosen the advance diaphragm screw (G), Fig. 124, on 6 cylinder models and rotate distributor body in a clockwise rotation one graduation mark at a time until the "ping" is heard. On 8 cylinder models, loosen clamp screw (G), Fig. 125, and rotate distributor body counterclockwise one graduation mark at a time until "ping" is heard. Under no circumstances, however, should the pointer on the rear engine support be more than 1 inch before the U.D.C. 1/6 / mark on 6 cylinder flywheels and 3/4 inch before the U.D.C. 1/8 / mark on 8 cylinder flywheels.

If the "pinging" is heard at speeds above those previously mentioned, retard the spark timing by loosening the clamp screw and rotate distributor body in opposite direction, one graduation mark at a time until the proper setting is obtained.

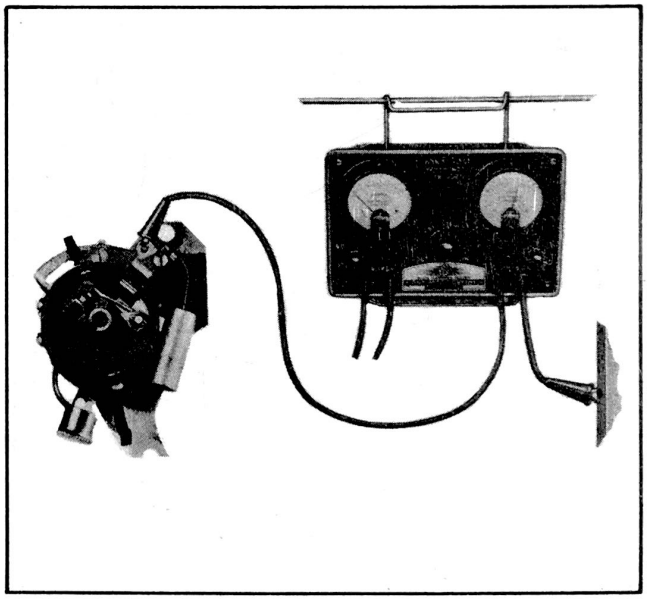

Figure 126 - Distributor Ground Test

DISTRIBUTOR GROUND TEST - All Models. Connect the positive voltmeter lead to the ground on engine and negative voltmeter lead to terminal of distributor, as shown in Fig. 126.

Remove distributor cap.

Turn distributor shaft until breaker points are closed.

Turn ignition switch on.

Voltmeter reading should not be more than 1/10 volt.

A reading of more than 1/10 volt indicates poor breaker point contact, poor distributor point plate contact or poor distributor housing contact to engine.

Turn distributor shaft until points are open.

Turn ignition switch on.

Voltage between distributor terminal and ground should be exactly same as battery voltage.

If lower, condenser is leaky or grounded.

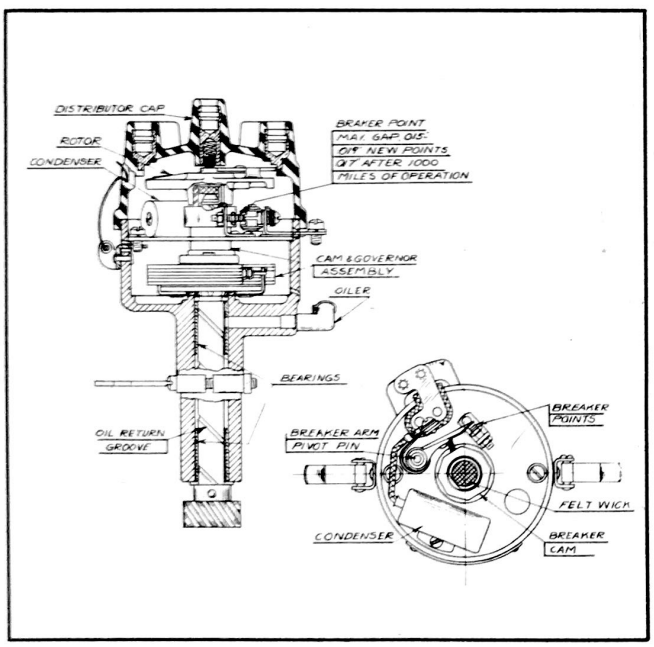

Figure 127
Distributor IGP-4008-A - Models 14, 17

DISTRIBUTOR TUNE-UP inspection should include the following:

Removal and cleaning of the inside of the distributor cap.

Removal of the rotor.

Inspection of the breaker points for necessary refacing and respacing or replacement.

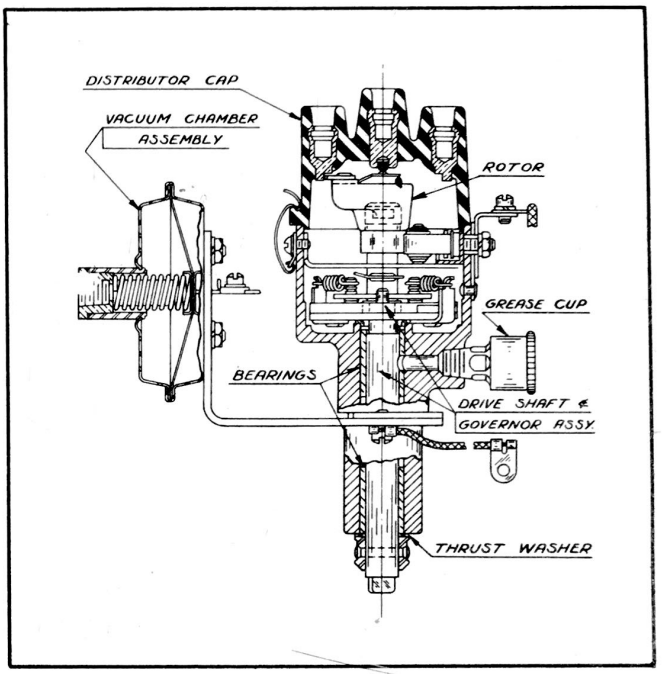

Figure 128
Distributor IGW-4203 - Models 10, 11, 12

Check the automatic governor to see that it is working freely.

Test the condenser.

Lubrication.

Check and re-set the timing of the distributor to the engine.

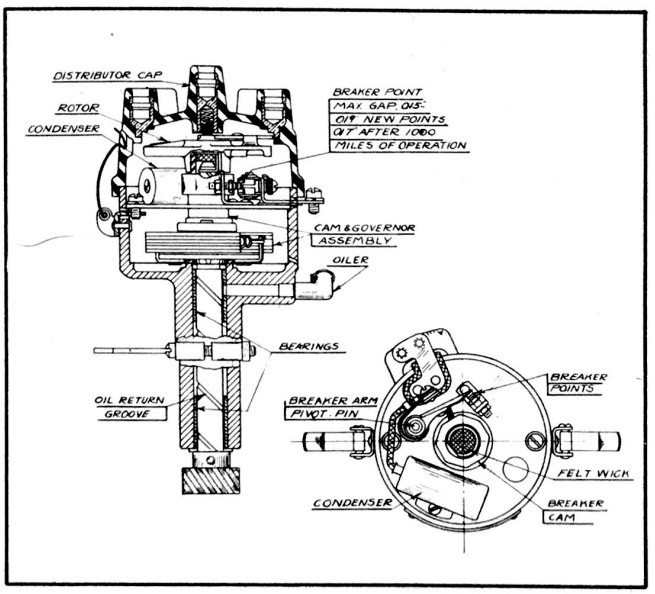

Figure 129
Distributor IGP-4008-A - Models 14, 17

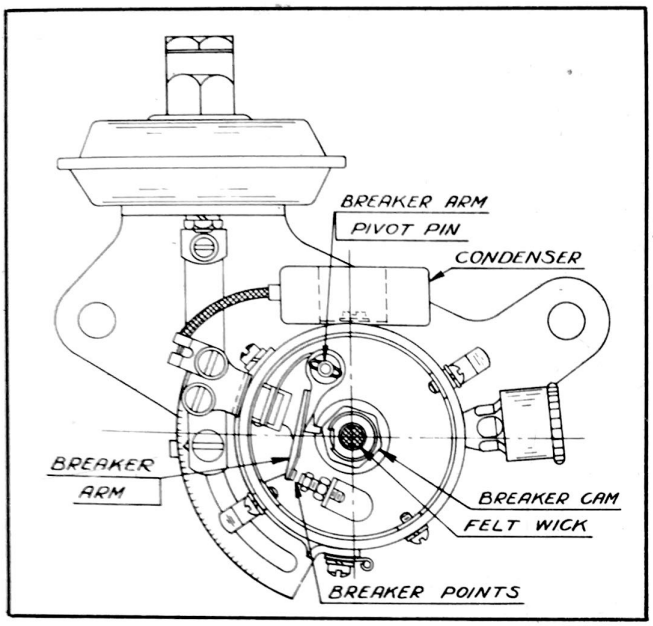

Figure 130
Distributor IGW-4203 - Models 10, 11, 12

Check the ignition coil.

Breaker points that show a grayish color and are only slightly rough with no pit or crater showing and which have within .002" of the proper maximum gap, require no adjustment or refacing. Breaker points that require adjustment should always be refaced first so that they have a smooth, flat contact with each other. They should be properly aligned so as to have full face contact.

Check governor for free operation by turning the breaker cam in the direction of rotation as far as it will go and then releasing. When released it should immediately return to its original position without any drag or hesitancy.

A test of the condenser should include both capacity and leakage.

SPARK PLUGS

The spark plugs used on all models are:

Champion
Type J 9 Hudson
Thread 14 M.M.
Gap .032"

Spark plugs having burned electrodes, chipped or cracked porcelains should be replaced with new J 9 Hudson plugs.

Spark plugs should be replaced at least every 10,000 miles with new J 9, Hudson plugs.

Hudson spark plugs have the name "HUDSON" on the porcelain.

Spark plugs should be tightened to 28 foot pounds.

NOTE: The J 9 Hudson spark plug used is for the average driving speed range. If the car is being used at continuous low speeds a hotter spark plug (J 5) can be used and if the car is driven at long continuous high speeds a cooler plug (J 10 Commercial) can be used.

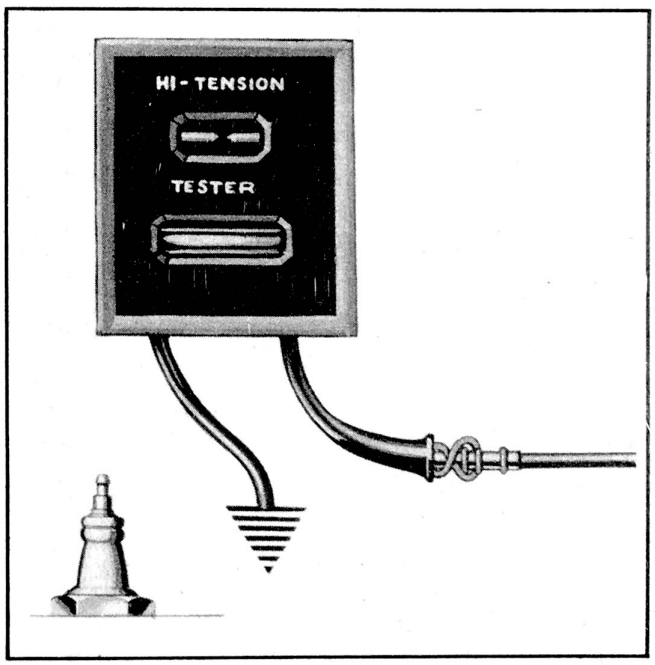

Figure 131 - High Tension Cable Test

HIGH TENSION CABLE TEST. Connect tester to No. 1 spark plug cable and ground as shown in Fig. 131. Run engine at idle. and set tester at 7 M.M.

If spark is weak or irregular connect tester to No. 1 socket of distributor. An irregular spark across 7 M.M. gap indicates poor No. 1 cable. Repeat test on all plug wires.

If irregular spark is obtained on some but not all tests, check distributor cap for a crack or for burned sectors.

If regular spark is not obtained on any tests, check rotor for short to shaft and wide gap.

IGNITION COIL

IGNITION COILS used are:
6 cyl. models ..... IG 4662
8 cyl. models ..... CE 4641
Amperage draw of coil is:
Engine stopped ..... 4.5 Amps.
Engine idling ..... 2.5 Amps.

IGNITION COIL TEST. If a regular spark is not obtained in the Spark Plug Cable Test then remove the cable from the distributor central terminal and connect tester to cable and distributor as shown in Fig. 132. Close tester gap and run engine at idle speed. Open gap to 7 M.M. and note spark.

Remove cable from coil and connect tester direct to coil and distributor. Repeat test. If spark is more regular than before, install new cable.

If regular spark is not obtained with 7 M.M. gap, replace coil.

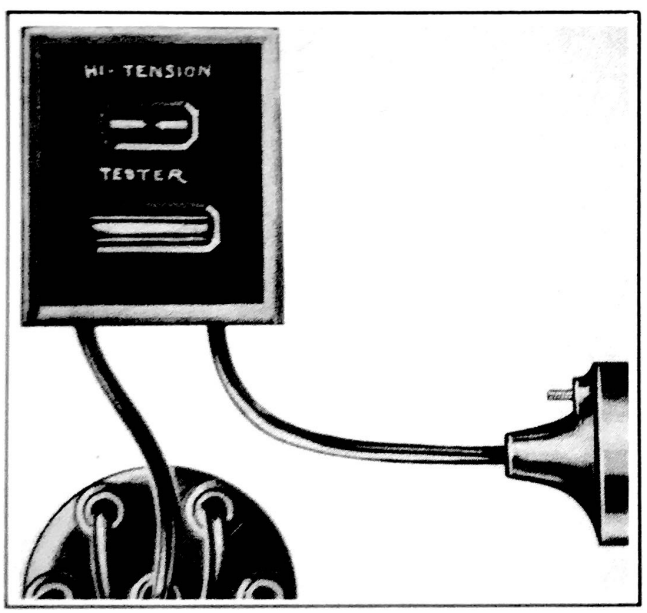

Figure 132 - Coil Test

ELECTRIC SWITCHES

IGNITION SWITCH LOCK is placed on the primary circuit as shown on the wiring diagram Fig. 103.

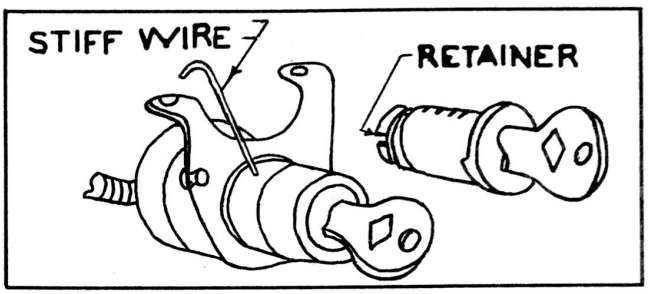

Figure 133
Removing Ignition Lock Cylinder

The cylinder lock is installed on the instrument panel and is held in the switch case (on the end of the ignition coil cable) by a retaining ring. To remove the lock cylinder insert the key in the switch and turn the key to extreme right or "ON" and with a pointed tool or wire, (1/16" diameter) or a paper clip, inserted in the small hole in the face of the cylinder (the hole is just back of the bracket legs bolted to the instrument panel ledge).

Press in on the tool or wire, see Fig. 133, depressing the lock cylinder spring retainer and turn the key clockwise which will release the cylinder. Remove cylinder from the lock body. Replace cylinder in case with key in "ON" position and then snap key to "OFF" position.

The ignition lock key series is H.601 --H 1100.

IGNITION SWITCH BLANK LOCKING CYLINDERS can be purchased from the Factory Parts Department and by blank lock cylinders is meant cylinders that have not had the tumblers cut to match a certain key (uncoded). See "Blank Lock Cylinders for Coding," Body Section.

IGNITION SWITCH DISASSEMBLING.. To disassemble the ignition switch:

1. Remove the ignition switch by taking off the two mounting bolts fastening

it to the instrument panel ledge and disconnect all leads.

2. Remove ignition coil at dash and remove coil and switch assembly as a unit.

3. Remove the stakings on the lock case retaining lock case cover and pull the cover and entire rotor and switch base assembly out of the case.

4. Replace the rotor and switch base as a unit.

IGNITION SWITCH ASSEMBLING. See that the prong on the lock cylinder enters the slot in the face of the adapter on the forward end of the rotor and switch base assembly and that the ridge in the lock case registers with the slot on the side of the switch base. Push assembly into the lock case, replace the cover and stake securely.

IGNITION SWITCH TESTING requires a test lamp and leads with the switch "ON" test switch circuits. If circuits are completed and switch is still unsatisfactory, remove ignition coil base (cable connection) by taking out three screws. This will expose the coil terminal in the base. Check the circuit through switch and coil lead to this terminal. If the circuit tests O.K. disconnect coil, test coil, and replace if necessary. If tests indicate switch is faulty disassemble as shown above.

LIGHTING SWITCH. When headlights are turned on their beam is controlled by a foot switch located on the left side of the toe board. A small red light in the speedometer dial indicates whether the beam is on highway (high) or city driving (low) beam. If the light is red it indicates highway or high beam. Pressing the foot switch turns out the light and places the beam in the city driving or lower beam for safe passing.

The lighting switch is of the push type, the button being hinged at the top.

The first "IN" position of the button turns on the instrument panel, bonnet, tail and fender (if used) lights.

The second "IN" position of the button adds the headlights to those already turned on in the first position.

STARTER AND LIGHTING SWITCH is the push button type. The buttons are held in place by a steel wire hinge pin that is wedged after installing (see Fig. 134).

The button bracket is held to the switch by a 3/8"-24 nut on the end of the switch push plunger. The button bracket is held to the instrument panel by two bolts.

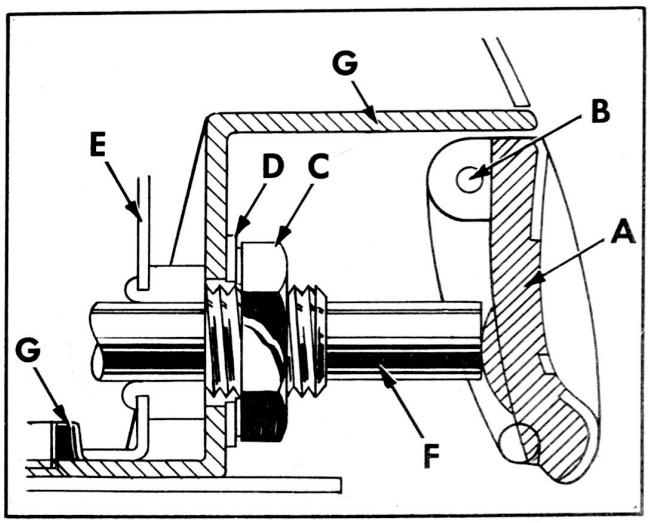

Figure 134 - Lighting Switch

A. Push button (starter or lighting)
B. Push button pin
C. Push rod to bracket nut
D. Push rod to bracket nut lockwasher
E. Switch (starter or lighting)
F. Switch push rod
G. Switch bracket to instrument panel screw

TO REPLACE A BUTTON. Clip or file off the button pin swedged end and push the pin out of the button.

TO REMOVE THE SWITCH. Remove the 3/8"-24 nut and lockwasher that holds the switch to the bracket.

HEADLIGHT DIMMER SWITCH. The headlight dimmer switch on the floorboard and used for the country (upper) or traffic (lower) headlamp beam can be checked as follows:

The voltage drop from the common terminal to either side with a 10 ampere load should not exceed 50 M.V.

STOP LIGHT SWITCH. The stop light switch is "ON" in its normal position with one end of the switch plunger resting against the brake pedal in order to hold the switch in the "OFF" position so that when the brake pedal is released the spring inside the switch returns it to its normal "ON" position.

The switch has two snap terminal connections.

The plunger travels 3/32" from the normal "ON" to the "OFF" position. Check the spring condition occasionally to see that it is returning the plunger to the "OFF" position.

Terminal contact surfaces are silver plated which gives a clean contact indefinitely free from the corrosion which causes many of the difficulties in electrical systems.

Voltage drop across the stop light switch terminals should not exceed 50 M.V. at 10 ampere load.

NOTE: When replacing a stop light switch use a HUDSON switch with silver plated terminal contacts.

RHEOSTAT SWITCH. The rheostat switch is standard equipment on Models 12,14,15, 17. This is located on the lower ledge of the instrument panel just to the left of the center. Its purpose is to dim or entirely turn out the instrument panel lights.

The switch is connected to the "T" terminal of lighting switch and is operative only when the car lights are turned on. Turning the knob to the right or clockwise rotation decreases and turning to the left or counterclockwise increases the brilliancy of the instrument panel lights. Turning the knob to the extreme left turns lights out.

HEADLAMPS

The head lamps are the "Sealed Beam" type, designed so that the bulb, reflector, lens, and the gasket are assembled in one securely sealed unit making them dust and moisture free.

When the filament burns out, or the lens break, the entire unit is discarded and a new one installed, thereby assuring maximum lighting efficiency through the life of the car.

The cost of this unit is very low and is balanced by giving a longer life to the filament than has been possible in previous headlamp bulbs.

HEADLAMP UPPER BEAM IS THE BRIGHT LIGHT for country driving and is for illuminating the road evenly for a considerable distance ahead of the car. This upper beam is for use on the open highway when no other vehicles are approaching.

HEADLAMP LOWER BEAM IS THE TRAFFIC LIGHT and is low enough on the left side to avoid glare in the eyes of the oncoming drivers. It is intended for use on heavily traveled highways and should always be used when meeting other vehicles.

This lower beam is designed so that it does not throw any dazzling light into the eyes of an approaching driver regardless of the load in the car. The light, however, illuminates the right side of the road as far ahead as is practicable without causing glare on the curves.

HEADLAMP OPERATION. The operation of the headlamp country beam or traffic beam is by means of a foot switch conveniently located on the left side of the toe board.

The light switch button on the instrument panel has two positions. The first stop is for the bonnet lights, tail lamps and license plate, and the second and last stop is for the headlamps, bonnet lamps and tail lamps.

When the country or upper beam is lighted a red pilot bulb under the 50 mile mark on the speedometer dial is illuminated.

HEADLAMP CONSTRUCTION. The Sealed Beam reflector unit (A) Fig. 135 is held to a sub-body (B) by the retainer (C) and three screws which may be loosened for removal of the unit. The sub-body (B) forms a ball and socket joint with the lamp housing (D) and is held to the housing by four coil springs (E) plus the vertical adjustment screw (F) and the horizontal adjustment screw (G).

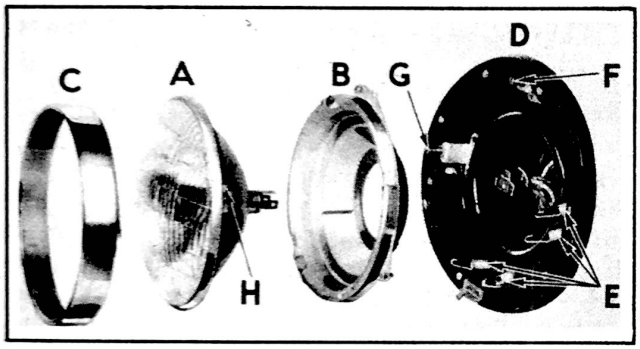

Figure 135 - Headlamp Construction

The horizontal light beam adjustment can be made without disturbing the vertical light beam setting.

The reflector unit is provided with three locating lugs (H) which fit into corresponding slots in the sub-body. These lugs are located so that the reflector unit can only be mounted in one position.

The Sealed Beam unit is interchangeable right and left.

REMOVING SEALED BEAM UNIT. Remove headlamp lens rim by taking out the three screws.

Loosen, but do not remove, the three screws (C), Fig. 136, holding the retainer. *(Do not disturb the aiming screws A and B at the top and left side of the unit.*

Remove retainer by rotating counterclockwise, allowing the Sealed Beam Unit to be removed.

Remove the reflector plug from the unit as shown in Fig. 137.

Install new unit by reversing above operations.

REMOVING HEADLAMP. Remove three screws holding rim to headlamp body.

Loosen three screws (C), Fig. 136, holding the retainer.

Remove retainer by rotating counterclockwise, allowing the Sealed Beam Unit to be removed.

Remove the reflector plug from the reflector unit as shown in Fig. 137.

Remove four screws attaching headlamp body to fender.

Remove sheet metal ground screw in back of lamp body.

Remove three sheet metal screws attaching wire harness to lamp housing.

Remove harness from junction block and pull harness through lamp housing.

To reassemble reverse procedure of disassembly. *Re-aim lamps after installation.*

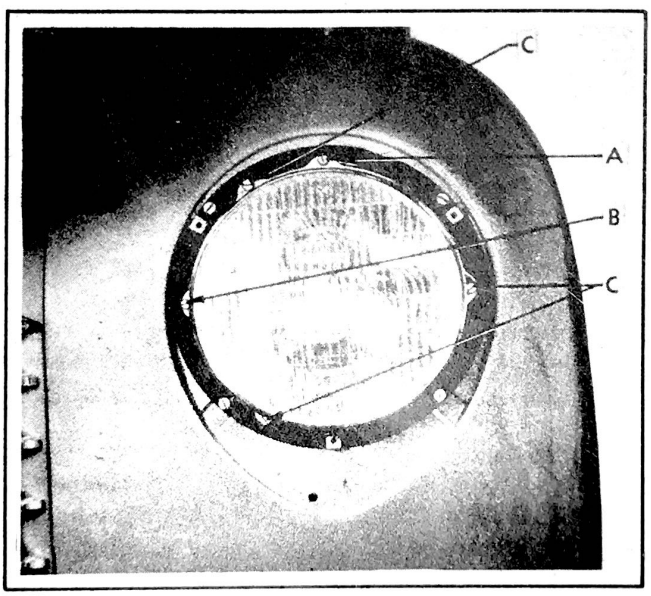

Figure 136 - Headlamp Beam Adjustment

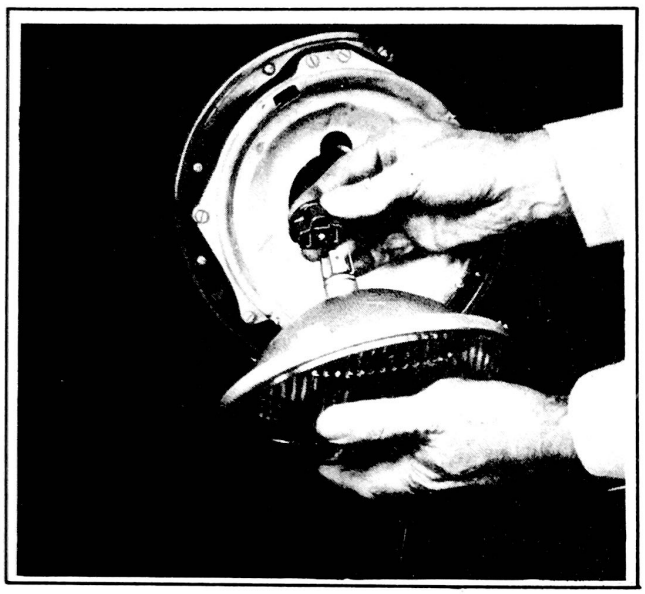

Figure 137 - Sealed Beam Headlamp

HEADLAMP AIMING. Place the car on a level stretch with a light colored vertical screen 25 feet ahead of headlamp lens.

Draw a horizontal line on this surface at the level of a point 3" below the headlamp center, as shown in Fig. 138. This line is 26-3/4" above the floor line. If, however, your state requires a loading allowance, draw this horizontal line below the above line by whatever amount that is required in your state.

Sight through the center of the rear window to the right and left of the windshield center bar and mark two points on the horizontal line.

Draw vertical lines (B-B) and (C-C), Fig. 138, on the screen to the right and left of the center line at a distance equal to one-half of the center to center distance (28 inches) between the two lamps.

Place lighting switch in position which produces highway (upper) beam on screen. When the highway (upper) beam is lighted the lower filaments on both lamps are illuminated.

Remove headlamp lens rim.

Independent adjustment of both horizontal and vertical aim is provided in "Sealed Beam" headlamps, with the adjustment screw as shown at (A), Fig. 136, and the horizontal adjustment screw at (B). The light beam is moved to the right or left by tightening or loosening this horizontal adjustment screw (B). The beam may be raised or lowered by turning the vertical adjustment screw (A).

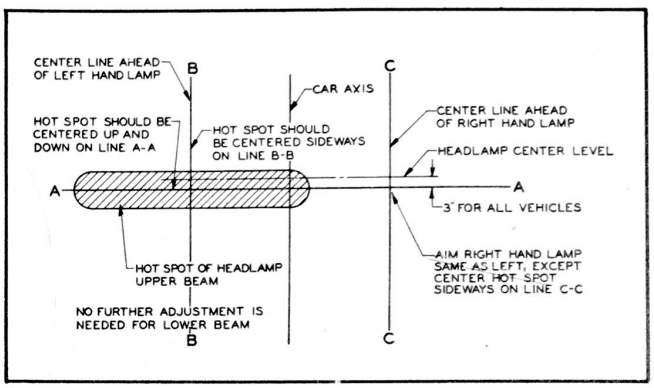

Figure 138 - Headlamp Adjusting Chart

Cover one lamp to obscure the beam of light and then adjust the beam from the other lamp so that the center of the zone of highest intensity falls on the intersection of the horizontal line (A-A), Fig. 138, 3" below the headlamp center and the vertical line directly ahead of the lamp.

Repeat the operation for the other lamp. No further adjustment is needed for the traffic (lower) beam.

DIRECTION INDICATOR

The direction indicator is manually operated from a switch located directly below the steering wheel on the steering column.

This direction indicator is standard equipment on models 15 and 17 and is optional on all other models.

DIRECTION INDICATOR OPERATION. When the direction indicator switch button "R" is depressed an electric circuit is made that lights the 21 candle power bulb in the right front fender lamp and right rear stop lamp.

The electric current passes through a flasher switch which interrupts the circuit and gives an intermittent flashing of the lamps which continues until the release (center) button is depressed.

Depressing the button "L" flashes the left front fender lamp and left rear stop lamp and the flashing continues until the release (center) button is depressed.

Simultaneously with the flashing of the front fender lamp and stop lamp a bulb flashes in a small jewel in the switch cover. This draws the driver's attention to the fact that the front fender and tail lamps are flashing.

If the front fender lamp bulb or tail lamp bulb is burned out or is failing to operate, this jewel will not flash.

When the switch button "R" is depressed and the brake pedal is depressed at the same time, the right front fender lamp and right tail lamp will flash and the left stop lamp will light as usual without flashing. The same condition is true when the left ("L") button is depressed and the brake is applied.

When neither the "R" or "L" button has been depressed the usual operation of all lights applies and no lamps are flashing.

The flashing operation only takes place with the ignition switch on.

DIRECTION INDICATOR INSTALLATION ON CARS NOT SO EQUIPPED. The direction indicator kit with a fender lamp kit contains all of the wiring connectors, etc., that are needed to make an installation in the field on cars not equipped with either. Cars equipped with fender lamps require the direction indicator kit only and 21 CP bulbs in the fender lamps.

DIRECTION INDICATOR INSTALLING. The models 15 and 17 have the wire leading from the indicator switch to junction in trunk compartment. On all other models when indicator is installed in field it is advisable to install wire and conduit included in kit by running along inside of frame side member securing with clips provided and carry up into trunk compartment through hole provided for dome light wire.

On Models 15 and 17 this wire runs along the left side of the body under the headlining and just above the doors.

Disconnect horn wire at the bottom of steering column.

Remove horn button, spring and retainer by pressing down on the horn button and turning slightly counterclockwise.

Remove steering wheel nut.

Pull wheel with tool J 739 and adapter J 739-7.

Using Phillips screw driver remove Phillips screw holding handy shift upper bracket and cap to steering column. Discard screw.

Remove this Handy Shift upper bracket cap and discard.

Place conduit with wires also conduit cover in place in the direction indicator switch head and install the switch head; conduit and conduit cover all at one time using screws included in kit.

Remove lower steering column support cap Phillip screws. Remove cap and discard.

Install lower steering column support cap included in kit. This also serves as a holder for the direction indicator conduit cover: Use screws that were removed.

Install steering wheel; horn button wire spring and retainer and horn button.

Connect horn button wire at lower end of steering column tube.

Remove screw under the instrument panel and directly behind the 15 mile mark on the speedometer and attach the flasher switch at this point using the screw just removed, the back of flasher resting against the speedometer housing.

Remove screw at the top terminal of fuel indicator (under instrument panel) and attach red fuse wire of flasher switch.

Follow wiring diagram for wiring connections.

REPAIRING OF DIRECTION SIGNAL INDICATOR. The buttons of the direction signal indicator switch slip over flat terminals in the switch. The interior of the switch is accessible for checking connections or changing jewel bulb by pulling the buttons off and underneath the button are screws which permit the removal of switch cover. The switch can be removed after the cover has been taken off by removing screws under the cover. Jewel bulb is 1 C.P.--6 V.--G 3-1/2 Bulb--Miniature Bayonet base.

CAUTION: When checking tail or front fender lights for flashing be sure that ignition switch is "ON".

NOTE: If direction signal indicator is already installed on the car and it is necessary to pull the steering wheel it will be necessary to remove the direction indicator switch to use Tool J 739 and adaptor J 739-7 puller.

FUSES

The fuses protecting the lighting and the accessory circuits are located in a fuse block attached to the lower edge of the instrument panel between the ignition lock and the steering column bracket. These two fuses are of 20 ampere capacity and have silver plated caps.

Silver maintains a clean contact indefinitely and the use of silver plated fuses will maintain light efficiency and accessory life. Corrosion at this point which shortens good headlamp lighting is eliminated. The Sealed Beam headlamp will operate at its best because of this silver plating of fuses.

The fuse clips of the fuse block are also silver plated.

Replacement silver plated fuses should always be used and are available through the Hudson Factory Parts Department.

The lower fuse in the fuse block protects the lighting circuit and the upper fuse protects the accessory circuit.

There are two extra terminals on the fuse block for extra electrical accessories that may be installed.

Other fuses used (not silver plated) are as follows:

Twin electric air horn fuse is of 30 amperes and is located in a fuse case attached to the engine side of the dash on the left side.

Direction indicator circuit fuse is of 10 amperes and is located behind the instrument panel near the speedometer head.

Electric clock circuit fuse is of 2 amperes and is located in a case behind the clock.

GENERATOR CHARGING INDICATOR

This is an instrument mounted on the instrument panel instead of an ammeter to indicate to the driver when the generator is charging the battery.

A small lamp bulb is incorporated in the case behind a red window and is connected to the "GA" terminal of the ignition switch and is operative only when the ignition is turned on.

When the ignition switch is turned on the circuit is completed from the ignition switch, through the bulb, to the "T" terminal of the voltage regulator, Fig. 139, to the insulated contact points (A), to

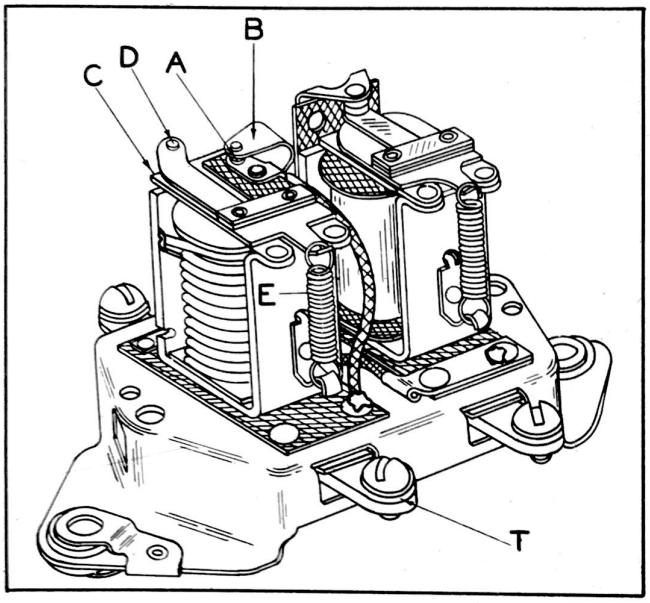

Figure 139
Checking Generator Charging Indicator

the grounded strap (B) of the cut-out relay. As the engine is started and generator speed is increased to a car speed of approximately 10 miles per hour the generator develops sufficient voltage to pull down the cut-out armature (C), closing the main contact points (D), opening the insulated points (A) causing the light to go out.

If the lamp bulb does not light when ignition is turned on, ground the "T" terminal to the engine (not to "B" terminal). If the bulb still does not light, check for burned out bulb or loose connections. If the lamp lights when the "T" terminal is grounded, it is an indication that the main contact points (D) are closed due to fusing, or the armature spring (E) is weak or broken.

In this event the regulator should be replaced with a new or exchanged unit secured from an Authorized Electric Auto-Lite Service Station. The case is sealed. DO NOT BREAK SEAL.

HORNS

HORN ADJUSTMENT - SINGLE TYPE. On the single unit vibrator type horn a slotted screw and lock nut will be found in the exact center of the cover, where the tone adjusting screw is ordinarily placed.

This screw is used to control the air gap in manufacture and should never be disturbed when making horn adjustments. For the purpose of adjusting the tone, a separate, self-locking, fillister head screw is provided, located at some distance from the center, near the outer row of six cover screws.

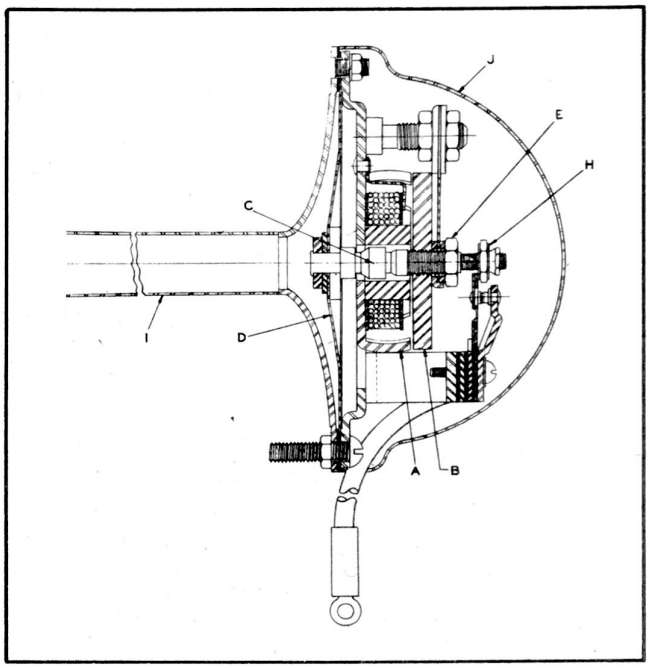

Figure 140 - Electric Air Horn

Before attempting an adjustment to improve an unsatisfactory tone, however, the following possible causes should be checked:

1. Poor Electrical Connections
   (a) Examine the connections at horn and wires to make sure they are clean and tight.
   (b) Check contacts in horn button. They should be bright and clean.

2. Loose particles, dust or water in projector.
   (a) Clean drain hole in bottom of front cover.

3. Loose Bracket Screws
   (a) Tighten bracket screws solidly both at dash and horn mechanism.

4. If none of these conditions are responsible and correction must be made by adjustment, proceed as follows:

(a) With engine running at a speed just sufficient to keep relay points closed, turn the fillister head adjusting screw clockwise or counterclockwise, 1/8 turn at a time until best tone is obtained.

(b) Check adjustment with engine running at a speed corresponding to a car speed of 30 miles per hour with all lights off and again with the engine shut off and all lights on.

DO NOT DISTURB ANY OTHER SCREWS OR POINTS OR ADJUSTMENT.

ELECTRIC AIR HORNS. The twin electric air horns are standard on Models 10 Passenger, 11,12,14,15 and 17 and are optional equipment on the Model 10 Traveler, 18 and Commercial cars. The shorter horn is the high pitch and the longer the low pitch.

The power is derived from a magnetic type motor consisting of a field, armature, coil and a set of breaker points which interrupt the flow of current in the coil. The armature is attached rigidly to the diaphragm and the interruption of the current in the coil causes the diaphragm to vibrate.

The horns are in pairs constructed in such a manner as to produce two frequencies or tones and these frequencies are of the proper interval so as to produce a harmonious tone when the two horns sound together.

These are the major items that govern the frequency; the form of the diaphragm; the thickness of the diaphragm; the length of the air column and the air gap setting between the field and the armature.

The high pitched horn has a diaphragm .0195" thick and a short air column. The low pitched horn has a diaphragm .015" thick and a long air column.

Adjustment is by means of an adjusting nut under the motor cover and it is advisable to have only one horn operating when the above adjustment is being made. Remove the wire between the horn not being adjusted and the horn relay, at the terminal on the relay. Proceed in this manner with each horn and after each horn has been tested, connect both to the relay and sound them together.

1. Remove the motor cover (J), Fig. 140, and with the engine speeded up to give the maximum charging rate, move the adjusting nut (H) up or down until the desired tone is obtained. Lock adjusting nut in the position with its lock nut.

If satisfactory results are not obtained after the above adjustment proceed as follows:

1. Check the air gap between the field (A) and the armature (B) with a feeler gauge. This should be .026" to .030" on the high pitch horn and .032" to .035" on the low pitch horn.

2. The armature is threaded on a diaphragm stud (C) which is attached to the diaphragm (D). The armature can be locked in any position desired by lock nut (E). Therefore, to set the air gap between the field (A) and the armature (B) loosen the lock nut (E) and turn the armature (B) in a clockwise direction to decrease the air gap and counterclockwise to increase the air gap.

3. Tighten the lock nut (E) securely before and after checking the air gap.

4. The armature should be approximately parallel with the field. If it is out of parallel this can be corrected with a hammer and punch. Tap the armature down on the open side.

5. After the air gap has been properly adjusted it will be necessary to readjust the adjusting nut (H) to obtain the maximum volume and the best tone.

NOTE: If the projector assembly is removed, the gasket between the diaphragm and the projector assembly must be in good condition as any air leak whatsoever in the air column reduces the volume and quality of the tone of the horn.

The short projector is used with the thick diaphragm on the high horn and the long projector with the thin diaphragm on the low horn.

HORN RELAY. A horn relay mounted on the dash is used with the twin electric air horns.

The contact points must close positively with a minimum of 3 volts and a maximum of 4 volts and open with not less than 2 volts across the coil with the relay in an upright position which is with the terminals down.

The coil resistance is 7.3--8.9 ohms at 70° F.

HORN FUSE - TWIN ELECTRIC AIR HORNS. The horn circuit is protected with a 30 ampere fuse located in a fuse connector attached to the dash in the engine compartment.

HORN ASSEMBLY - REMOVE AND REPLACE.

1. Unlock and raise bonnet.

2. Disconnect red ground wire to horn relay.

3. Disconnect yellow battery wire to horn relay.

4. Remove the bottom screw of the bonnet spring support rod which holds the horn.

5. Remove screws holding horn support bracket to frame.

6. Remove radiator core baffle through which horn protrudes by removing machine screws and clips holding it to radiator shield and fender.

7. Remove horn.

TAIL LAMP is held to the quarter panel by four studs with nuts that are cast into the tail lamp rim.

There is a gasket between the lens and the lamp rim and another gasket between the lens and the lamp housing on Models 12, 14, 15, 17.

There is a gasket between the lens and the lamp housing on Models 10, 11.

The lens can be removed by taking off the four stud nuts inside the rear compartment and lifting the lens and door assembly out of the quarter panel. Remove the four screws attaching the base to the door and take out the lens.

The black wire is connected to the 3 C.P. tail light bulb and the white wire to the 21 C.P. stop light bulb.

The bulb can be replaced by raising the rear compartment door and taking it out of its socket.

LAMPS

FRONT FENDER LAMP used as standard equipment on Models 12 and 14 has a 3 C.P. bulb which will have to be changed to a 21 P.C. if used with a direction indicator. Models 15 and 17 fender lamps have a 21 C.P. bulb because the direction indicator is standard equipment.

Replacement of a bulb or lens can be made by removing the Phillips screw on the inside lamp housing and removing the housing. Remove the lens and replace the bulb.

FRONT FENDER LAMP KIT for field installation consists of -

Front fender lamp, Right or Left
10 -- Front fender lamp attaching screw
10 -- Front fender lamp attaching screw lockwasher
10 -- Front fender lamp attaching screw cup washer.
2 -- Front fender wire grommet
2 -- Front fender lamp pad
1 -- Template for drilling fender.

This kit includes a 21 C.P. bulb.

BONNET LAMP. To replace the bulb, raise the bonnet and pull the bulb socket out of the lamp housing. To replace the lens remove the nuts attaching the housing to the bonnet. Lift out the housing and lens.

DOME LAMP. Grasp the lens and retainer assembly and unsnap from the base.

LICENSE LAMP. To replace the bulb raise the rear compartment door and pull the bulb socket out of the lamp and remove the bulb. To replace the lens remove one small screw attaching the lens retainer plate and remove plate, gasket and lens.

REFERENCES

SOURCE OF INFORMATION	DATE	SUBJECT

ENGINE

SPECIFICATIONS

ENGINE MOUNTING

Rubber .
3 Points
Front engine support
bolt. Tighten with
torsion wrench.....45 foot lbs.
Bore--Model 10 (6 cyl).3"
Model 11,12
(6 cyl).....3"
Model 14,15,17
(8 cyl).....3"
Stroke--Model 10
(6 cyl).....4 1/8"
Model 11,12
(6 cyl).....5"
Model 14,15,
17,(8 cyl)...4 1/2"

CAMSHAFT

Drive.....Laminated Gears
Time indication marks
on.....Gears

CAMSHAFT BEARINGS--Steel back,
Bermax lined

Diameter and length
6 cyl.
No. 1.....2.000"x 1-1/4"
No. 2.....1.968" x 1-1/16"
No. 3.....1.5625" x 11/16"
8 cyl.
No. 1.....2.029" x 1-3/8"
No. 2.....1.998" x 1-1/16"
No. 3.....1.966" x 1-1/4"
No. 4.....1.9355" x 1-1/16"
No. 5.....1.498" x 1-5/16"
Radial clearance.....002" to .0025"

CONNECTING RODS
Material.....D.F. Steel
Weight
Model 10.....30-3/4 oz.
All other models.....30 oz.
Length - Center to
center
Models 10,18, 5
Pass Sedan-18
Pass Chassis.....8-5/8"
All other models.....8-3/16"

Lower end bearing
Diameter.....1-15/16"
Length.....1-3/8"
Radial Clearance.....001"
End Play..... .007" to .013"
Material.....Bearing alloy
Upper end bearing
Diameter.....3/4"
Length.....15/16"
Radial Clearance.... .0003"
Material.....Bronze

SPARK PLUG.....Champion J9 Hudson Special

CRANKSHAFT

Type.....Fully Compensated
Bearings
6 cyl.....3
8 cyl.....5
Bearing material.....Bearing alloy
Bearing-Diameter and
length
6 cyl.
No. 1.....2-11/32" x 1-5/8"
No. 2.....2-3/8" x 1-3/4"
No. 3.....2-13/32" x 2-3/8"
8 cyl.
No. 1.....2-9/32" x 1-5/8"
No. 2.....2-5/16" x 1-3/8"
No. 3.....2-11/32" x 1-7/8"
No. 4.....2-3/8" x 1-3/8"
No. 5.....2-13/32" x 2"
End Play taken up by
Bearing Number
6 cyl.....2
8 cyl.....3
Bearing end play..... .006"-.012"
Bearing radial clearance..... .001"
Adjustment type.....None
Main bearing bolts
Tighten with torsion
wrench.....75 foot lbs.

PISTONS

Type.....Cam Ground
Material.....Lo-Ex Aluminum Alloy

Weight.....10.5 oz.
Length.....3-3/16"
Pin center to top.....1-11/16"
Clearance
  Skirt.....001" to .002"
  Top of Piston.....016"
Depth of Grooves.....5/32"
Piston Pin Hole-Size...3/4"
Displacement 3" x
  4-1/8" - 6 cyl.....175 cu. in.
Displacement 3" x 5"...2.2 cu. in.
Displacement 3" x
  4-1/2" - 8 cyl.....254 cu. in.

PISTON PIN

Type.....Floating
Method of locking.....Snap rings
Diameter.....3/4"
Length.....2-7/16"
Fit in Piston
  (at 200° F.)..... .0003"
Fit in Rod..... .0003"

PISTON RINGS

Material.....Cast Iron
Joint type.....Straight cut-
  Pinned
Compression rings
  Number used.....2
  Width.....3/32"
  Gap..... .009" to .011"
Oil Rings
  Number Used.....2
  Width-upper.....3/16"
  Width-lower 3"x5"
    6 cyl. all 8 cyl...5/32"
  Width-lower 3"x4-1/8"
    6 cyl.....3/16"

VALVE LOCATIONS

6 cyl. intake
  from the front.....2-4-5-8-9-11
6 cyl. exhaust
  from the front.....1-3-6-7-10-12
8 cyl. intake
  from the front.....2-3-6-7-10-11-
    14-15
8 cyl. exhaust
  from the front.....1-4-5-8-9-12-
    13-16

VALVE TIMING

Intake opens.....10° 40' B.U.D.C.
  closes.....60° A.L.D.C.
Exhaust opens.....50° B.L.D.C.
  closes.....18° 44' A.U.D.C.

TIMING GEAR LASH..... .002" to .004"

VALVE STEM GUIDE

6 cyl-Sets 1-1/16" below top of cylinder
  block
8 cyl-Sets 15/16" below top of cylinder
  block

CONNECTING ROD BOLT NUT

Tighten with torsion
  wrench.....40 foot lbs.

COMPRESSION RATIO

3" x 4-1/8" 6 cyl.
  Model 10.....7-1/4 to 1
3 x 5 - 6 cyl. Model
  11,12,18.....6-1/2 to 1
3 x 4-1/8 - 8 cyl.
  Model 14,15,17.....6-1/2 to 1

CYLINDER HEAD BOLTS

Tighten with torsion
  wrench - 6 cyl.....40 foot lbs.
    8 cyl.....50 foot lbs.

FLYWHEEL TO CRANKSHAFT BOLT

Tighten with torsion
  wrench.....45 foot lbs.

WATER JACKET COVER BOLT

Tighten with torsion
  wrench.....15 foot lbs.

INLET VALVE AND TAPPET

Inlet valve material...Silicon Steel
Inlet Valve head out-
side diameter -
6 cyl.....1-3/8"
8 cyl.....1-1/2"
Inlet valve opening
6 cyl.....1-1/4"
8 cyl.....1-3/8"
Inlet valve lift.....11/32"
Inlet valve stem length
6 cyl.....5-11/32"
8 cyl.....5-3/32"
Inlet valve stem
diameter.....11/32"
Inlet valve stem
clearance..... .0025"
Inlet valve tappet
clearance..... .006 Hot-3"x5"
6 cyl. and all 8 cyl.
Inlet valve tappet
clearance..... .010" Hot-3"x4-1/8"
6 cyl.(if on valve
cover plate)
Inlet valve tappet
clearance..... .006" Hot-3"x4-1/8"
6 cyl.(if not on
valve cover plate)

EXHAUST VALVE AND TAPPET

Exhaust valve material-Silichrome Steel
Exhaust valve head
outside diameter.....1-3/8"
Exhaust valve opening..1-1/4"
Exhaust valve left.....11/32"
Exhaust valve stem
length - 6 cyl.....5-11/32"
8 cyl.....5-3/32"
Exhaust valve stem
diameter.....11/32"
Exhaust valve stem
clearance in guide.. .004"
Exhaust valve tappet
clearance..... .008" Hot-3"x5",
6 cyl. and all 8
cyl.
Exhaust valve tappet
clearance..... .012"Hot-3"x4-1/8"
6 cyl.(if on valve
cover plate)
Exhaust valve tappet
clearance..... .008"Hot-3"x4-1/8"
6 cyl.(if not on
valve cover plate)

VALVE STEM GUIDES.....Removable

VALVE GUIDE LENGTH.....2-9/16"

VALVE GUIDE TO CYLINDER BLOCK DISTANCE

(top of guide to top
of block) - 6 cyl....1-1/16"
8 cyl....15/16"

VALVE SPRING PRESSURE-
CLOSED.....40 lbs. at 2"

LUBRICATION SYSTEM

Type.....Hudson Duo-Flo
Automatic
Pump type.....Oscillating
Plunger
Pump drive.....Worm on Camshaft
Oil cooling by.....Baffles in
reservoir
Oil filter screen
mesh.....40
Capacity - Total
6 cyl.....5-1/2 Qts.
8 cyl.....9 Qts.
Capacity - Refill
6 cyl.....4-1/2 Qts.
8 Cyl.....7 Qts.

HORSEPOWER- ACTUAL

3 x 4-1/8-6 cyl.
Model 10.....92
3 x 5-6 cyl. Models
11,12,18.....102
3 x 4-1/8-8 cyl.
Models 14,15,17.....128

HORSEPOWER - TAXABLE

3 x 4-1/8-6 cyl. Model
10.....21.6
3 x 5-6 cyl. Models
11,12,18.....21.6
3 x 4-1/8-8 cyl.
Models 14,15,17.....28.8

ENGINE CONSTRUCTION. All engines, whether 6 cylinder or 8 cylinder, are the vertical in line type with two sizes of 6 cylinder engine and one size of 8 cylinder. The specifications are given on Page 127.

The crankcase and cylinder block is a single casting to provide maximum strength with the minimum of weight. A chromium alloy is used in the cylinder block to strengthen it and to increase the life of the bores; valve seats and the other wearing parts.

The crankshaft is drop forged, having integral weights which are drilled in the process of manufacture to give static and dynamic balance.

ENGINE NUMBERS are stamped on top of the cylinder block between number one and two exhaust manifold flanges. The engine number is also the car serial number.

The first two figures of the engine and car number are the year and model of the car. The succeeding figures are the actual serial number and these figures run in a single series regardless of model.

Example - 10101 - 11102 - 17103
First number is a Model 10 Serial No. 101
Second number is a Model 11 Serial No. 102
Third number is a Model 17 Serial No. 103

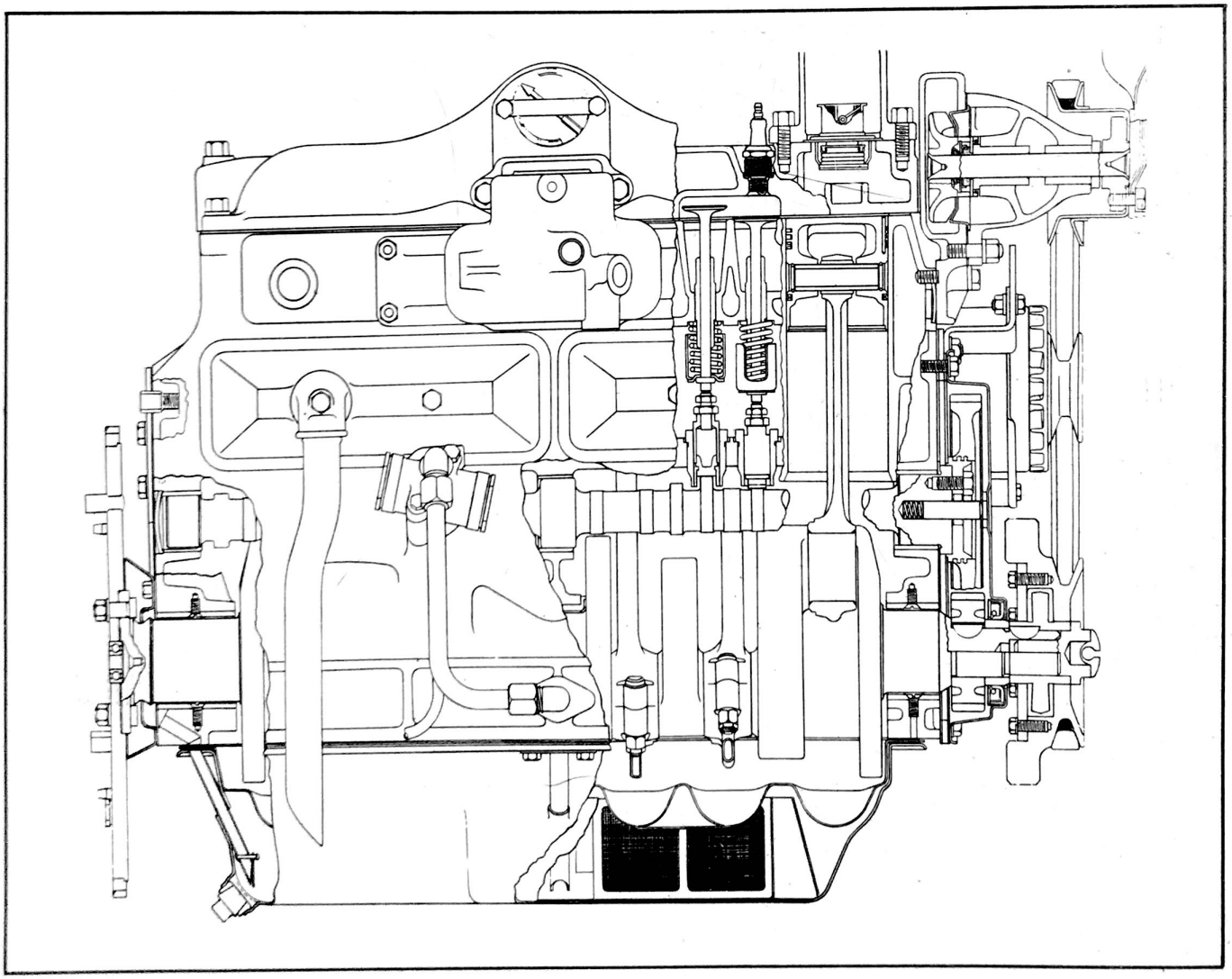

Figure 148 - Engine-Cross Section

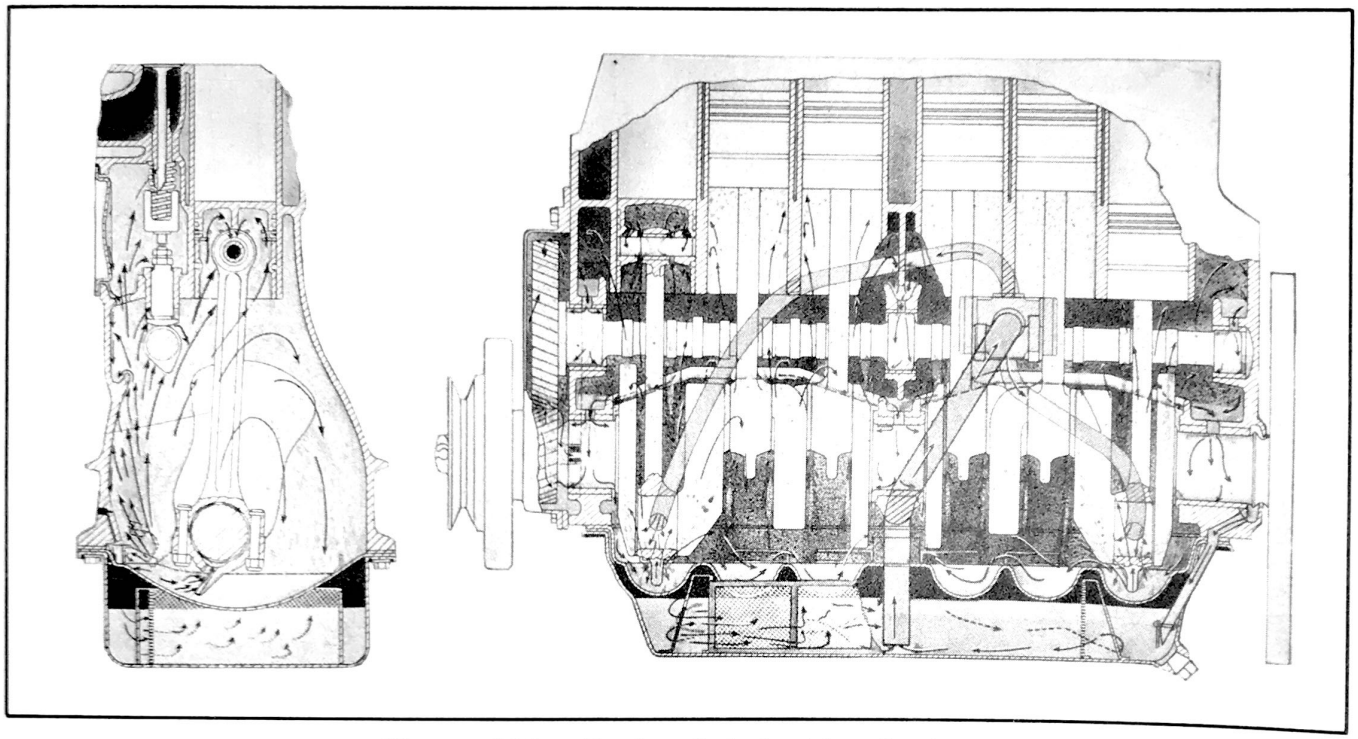

Figure 149 - Engine Lubrication System

OILING

THE OIL PUMP IS AN OSCILLATING PLUNGER TYPE and the drive is by gear from the camshaft. The rotary oscillating motion imparted to the plunger by the eccentric on the drive shaft, together with its reciprocating motion, causes slots in the plunger to alternately register with ports in the body of the pump which are connected to the inlet and outlet. The plunger is in reality a combination of a double acting piston and sleeve valve.

The double acting piston and drive shaft are the only moving parts and these move at only 1/12 engine speed, insuring low wear and long life.

THE OIL PUMP CAN BE REMOVED by disconnecting the inlet and outlet lines and removing the two mounting cap screws.

OIL PUMP DISASSEMBLING. Remove end hex caps and gaskets.

Remove dowel screw from pump mounting sleeve.

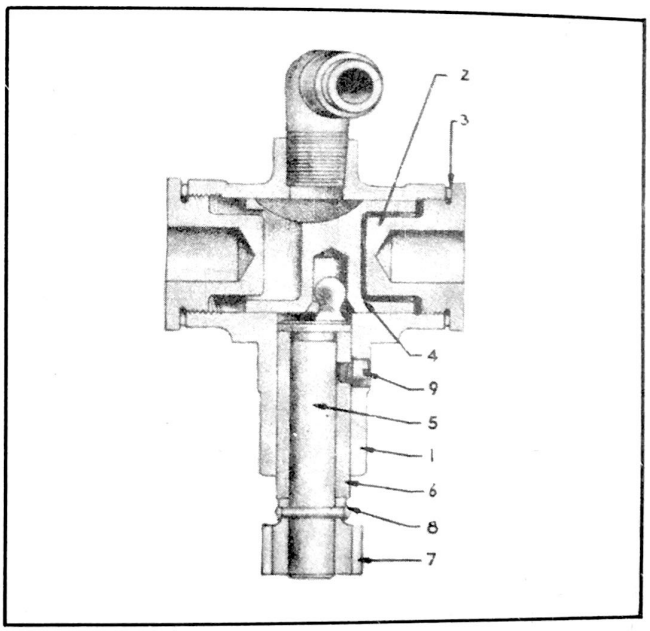

Figure 150 - Oil Pump

1. Oil pump body
2. Oil pump body plug
3. Oil pump body plug gasket
4. Oil pump plunger
5. Oil pump shaft
6. Oil pump shaft bushing
7. Oil pump gear
8. Oil pump gear pin
9. Oil pump shaft bushing retaining screw

Withdraw shaft and plunger. Wash all parts thoroughly and blow dry. Dip the shaft and plunger in engine oil.

OIL PUMP INSPECTION. The inlet to the pump consists of two 1/2" tubes, one from the reservoir to the crankcase side wall and the other from the crankcase side wall to the pump, in series.

The lower suction line should extend to within 15/32" of the bottom of the reservoir.

The oil pan and oil pan tray gaskets should always be in good condition or oil leaks will result.

The connections at the cylinder block and at the oil pump should be inspected to see that they are tight. *Leakage at these points will cause air to be sucked into the system and the flow of oil will be reduced and possibly stopped.*

OIL DELIVERY LINES. There are two 5/16" oil lines leading from the pump.

One leads directly into number one oil trough and the other to the oil check valve at the rear of the engine where the oil enters directly into number 6 trough.

OIL CHECK VALVE AND SIGNAL. The oil check valve builds up enough pressure to operate the dash signal to indicate oil flow. With hot oil this pressure ranges from 4 to 12 lbs.

The valve consists of a housing in which a plunger operates against the pressure of a spring.

When there is no oil flowing and therefore no pressure the plunger is pushed down by the spring and contacts an insulated pin which is the ground for the dash oil signal light. The light will burn until sufficient oil pressure is developed to raise the plunger.

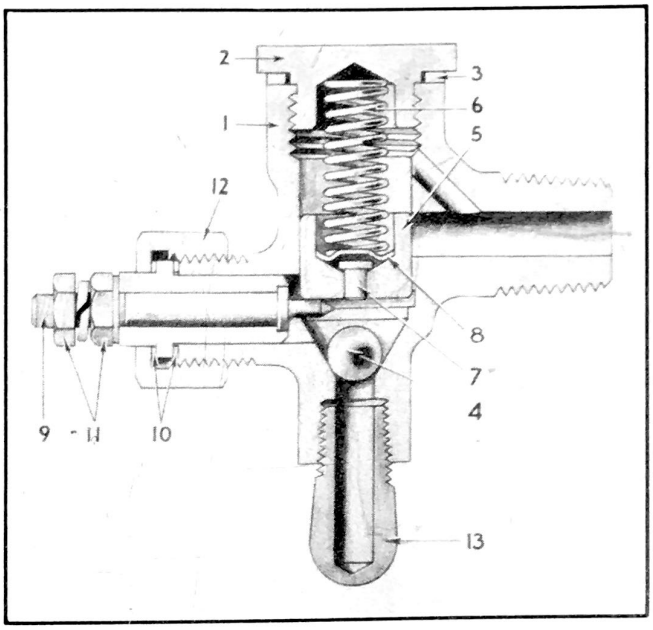

Figure 151 - Oil Check Valve

1. Oil check valve body
2. Oil check valve body plug
3. Oil check valve body plug gasket
4. Oil check valve ball.
5. Oil check valve plunger
6. Oil check valve plunger spring
7. Oil check valve plunger pin
8. Oil check valve plunger pin retainer
9. Oil check valve pressure indicator pin
10. Oil check valve pressure indicator pin gasket
11. Oil check valve pressure pin terminal nut.
12. Oil check valve pressure pin contact pin nut
13. Oil pump to check valve pipe elbow

A bleed hole is provided in the plunger to allow a small quantity of oil to pass by the piston to the outlet. *This hole must be kept clean or the lamp will not light immediately when the oil flow stops.*

OIL PAN should be removed and thoroughly washed with the change of seasons. Foreign matter that gathered on the filter screens and remained there when the regular oil change was made can only be removed by this thorough cleansing with the oil pan removed.

During this cleansing all oil lines should be checked for tightness; bends and damage of any kind.

OIL LEVEL GAUGE. Oil level gauges are of the bayonet type attached to the oil filler cap. When the bayonet gauge is in place, the bottom of the gauge is in line with the bottom of the suction line. The top mark on the gauge is the normal level of oil with the recommended quantity. The middle mark (bottom of oil level range) is reached when there is 2-1/2 quarts less than the recommended quantity in the reservoir. When the level reaches this point a complete oil change is in order or 2-1/2 quarts should be added to bring the level up to the top line.

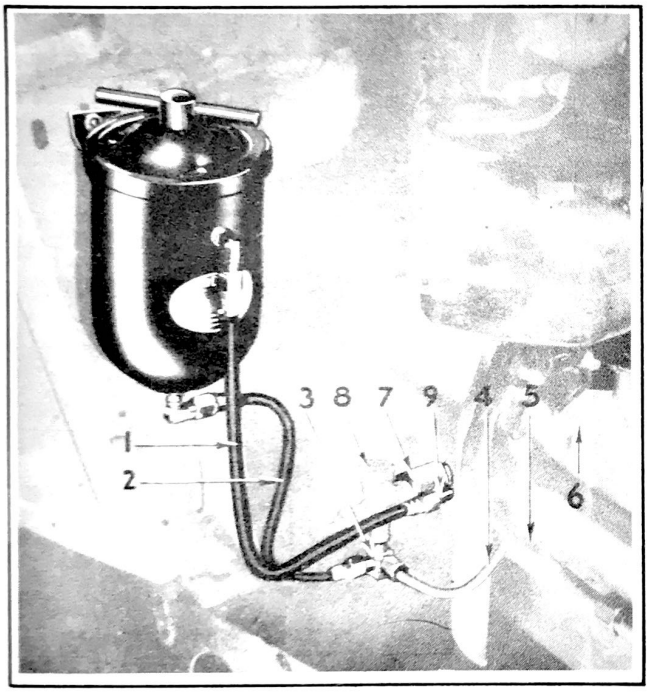

Figure 152 - Engine Oil Filter Installation

1. Outlet hose
2. Inlet hose
3. 3 Way tee
4. Oil pipe from oil pump
5. Oil pump to cylinder pipe
6. Oil pump
7. Oil check valve body extension
8. Oil check valve body plug
9. Oil filter pipe elbow

ENGINE OIL FILTER is special equipment on all models.

The engine oil filter used is of special construction designed for use with the low pressure oil system used in Hudson engines.

In dust areas this engine oil filter and the oil bath air cleaner should be used.

The oil filter kit consists of --

1 oil filter assembly including the mounting bracket
2 of oil filter mounting bracket to dash bracket bolt, plain washer, nut and lockwasher
1 oil filter inlet hose
1 oil filter outlet hose
1 oil check valve body extension
3 elbows
1 oil check valve 3 way elbow

ENGINE OIL FILTER INSTALLING. Remove fuel pump bowl if being installed on the 8 cylinder engine.

Disconnect the tell-tale wire at the oil check valve.

Disconnect the oil lines at the oil check valve.

Remove oil check valve using tool J-1454.

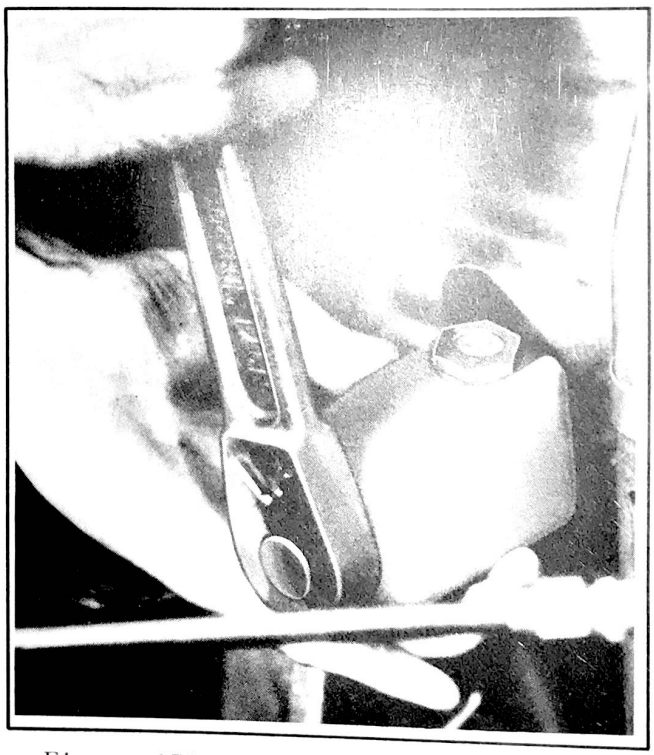

Figure 153 - Oil Check Valve Remover and Replacer Tool J-1454

Install oil check valve body extension to the oil check valve. Install one of the three elbows in the kit in the extension.

NOTE: Locate this elbow so that it is horizontal and toward the front of the car. The elbow pointing toward the side of the car and away from the engine (See 9 Fig. 154).

Remove the elbow from the bottom of the check valve and discard it. Replace with the 3 way tee (3, Fig. 152) in the kit. Locate this tee with the 5/16" outlet toward the front of the car.

Install this oil check valve assembly on the engine using Tool J-1454.

Attach the oil line (4, Fig. 152) from oil pump to the 5/16" outlet of the 3 way tee.

Attach the tell-tale wire to the check valve (7, Fig. 152).

Use the template in the kit to properly locate the oil filter unit. This is necessary in order to avoid interference with heater hose and to have the filter hose installed without kinks or sharp bends.

Drill oil filter unit holes in the dash according to the template.

Install the remaining two elbows in the kit in the oil filter unit.

The inlet elbow at the bottom must point toward the engine.

The outlet elbow at the top must be set at approximately 45° from a vertical position and toward the engine on the 8 cylinder and straight down on the 6 cylinder.

Bolt the filter unit thru the holes just drilled.

Keep the hose clear of any obstructions and connect the short or inlet hose from the 3 way tee to the elbow at the bottom of the filter (2) Fig. 152.

Keep the hose clear of any obstructions and connect the long or outlet hose from the elbow in the oil check valve body extension to the elbow at the top of the filter (1, Fig. 152).

Use two wrenches and tighten the hose. This is to prevent strain on the hose.

Run the engine for about ten minutes and inspect all connections for leaks.

NOTE: The oil filter cartridge is under the cover and can be removed by turning the handle and removing the cover.

Replace the oil filter cartridge after it has been in use for 5000 to 6000 miles or when the oil becomes cloudy, a condition that can be determined by an examination of the oil at the oil level gauge.

The engine oil should be changed every 2000 miles as shown on the Lubrication chart.

When installing the oil filter cover always rotate the cover with the handle until the four indentations in the cover flange are past the top edge of the filter body.

A new cover gasket is furnished with replacement cartridges.

Replacement cartridges can be obtained from any Hudson Dealer or the Hudson Factory Parts Department.

OIL PRESSURE INDICATOR is a signal light which consists of an oil pressure indicator on the instrument panel to indicate whether the oil pressure is satisfactory.

A regular lamp bulb is connected to the accessory terminal of the ignition switch (operating only with the ignition switch turned on) and is controlled by the oil line check valve.

The oil line check valve on the right side of the crankcase is provided with

an insulated terminal pin which is grounded by the check valve plunger when no pressure exists in the oil line.

The oil pressure indicator lamp lead is connected to this terminal. A small hole in the check valve plunger and a by-pass in the body allows escape of oil trapped below the plunger, causing the indicator lamp to flash.

The plunger rests normally against the pin when no pressure exists in the oil line so that the indicator lamp will light when the ignition is turned on. At speeds above idling (approximately 7 M.P.H.) the oil pressure holds the check valve plunger off its seat so that the indicator lamp does not burn or flash.

If the indicator lamp does not light when the ignition is turned on, then ground the check valve terminal to the engine. If the lamp does not light, replace the bulb. If the lamp does light, remove the terminal pin and see that it is straight and clean. Take off the plug on top of the check valve housing, remove the plunger and see that it is clean and moves freely up and down. Examine the spring above the plunger.

ENGINE FRONT SUPPORT REMOVING. Drain cooling system (Petcock at bottom of radiator and 1/8" pipe plug near lower rear corner of water jacket cover).

Remove generator; fan belt; and radiator outlet hose.

Raise the front end of the car and remove radiator lower tank shield.

Remove starting crank jaw and vibration dampener using Tool J-676-B.

Remove timing gear cover and gasket (See Page 148).

Turn engine over until timing marks on gears coincide.

Remove camshaft gear and thrust plunger. (See Page 149).

Remove crankshaft gear (See Page 148) using tool J-471.

Block up the front end of the engine. Remove front engine mounting bolts and nuts.

Remove engine support bolts and locks. Remove plate.

ENGINE FRONT SUPPORT INSTALLING. Clean the front face of the cylinder of all traces of the old gasket. *Use new gaskets.*

Replace engine support plate using new gasket.

Replace front engine mounting bolts and nuts. Draw them up tight until the upper and lower plates are against the bolt spacer.

Replace crankshaft gear with tool J-483.

Replace camshaft thrust plate and gear. The punch marked tooth of crankshaft gear must be between the punch marked teeth on the camshaft gear.

Replace timing gear cover.

Replace vibration dampener and replace starting crank jaw.

Lower front end of car.

Replace radiator outlet hose, fan belt and generator.

Adjust fan belt and refill cooling system.

ENGINE

ENGINE MOUNTING. The engine is mounted on rubber at three points. Two rubber cushions are used at each front corner and a large rubber block is used under the transmission bell housing and attached to the rear engine support frame member.

New mounting bolts without cotter pin holes and self locking slotted hex nuts are used which eliminate the need for cotter pins. The nut has a slight chamber at the contact face and as it is tightened the slots in the hex close up, thus automatically closing the threads on the nut tighter in the threads of the stud.

When the wrench is applied to the nut and the tension on the contact face is released, the slots again spread open and the net is removed in the conventional manner.

The nuts can be used over again.

Tighten engine front support bolt with a torsion wrench to 45 foot pounds.

ENGINE REMOVING. The 6 and 8 cylinder engines can be removed in the following manner.

1. Remove bonnet hinge and support bolts and take bonnet off.

2. Remove
   - Front seat cushion
   - Accelerator pedal
   - Front floor mat
   - Transmission hole cover
   - Clutch housing to engine bolts
   - Engine ground strap

3. Drain cooling system (Petcock at bottom of radiator and 1/8" pipe plug near lower rear corner of water jacket cover).

4. Remove horns.

5. Remove all radiator hose.

6. Remove radiator tie rods and the two bolts holding radiator to frame and remove radiator.

7. Disconnect wires at generator, starter, temperature gauge and remove wiring harness attached by clips on left side of engine.

8. Disconnect fuel pump flexible connection at pump. Remove fuel line running from fuel pump to carburetor.

9. Disconnect throttle linkage leading from accelerator cross shaft and remove cross shaft by pulling toward the spring and slipping cross shaft out of opposite bracket.

10. Disconnect windshield wiper hose at manifold.

11. Disconnect wire at oil check valve. Remove high tension wires at spark plugs; high tension wire bracket and distributor cap.

12. Remove carburetor and air cleaner.

13. Disconnect exhaust pipe at manifold.

14. Remove front engine support bolts and nuts.

15. Attach tool J-917 to engine and lift out of the chassis moving it forward carefully to detach from the transmission.

16. Remove generator, distributor, fuel pump and clutch.

ENGINE INSTALLING. Reverse procedure of removal.

Install starting motor after engine is in place.

Before installing the engine, wrap a single strand of soft wire around the leather seal of the clutch throwout bearing to prevent it from curling over when the engine is being placed in the chassis. Twist the wire and place the long ends upward thru the clutch housing and twist off after the engine is in its place in the chassis.

Engine should be lowered into the chassis carefully and over the mainshaft drive gear so as to engage the splines in the clutch driving disc.

Always use new genuine Hudson gaskets throughout as the cost of the new gaskets, made to fit, is small and any possibility of leaks due to torn, worn or buckled gaskets is almost eliminated.

EXHAUST

EXHAUST MANIFOLD is designed to make use of the heat it contains to preheat the gasoline vapor before it enters the combustion chamber.

All 6 cylinder models use a heat control box on the exhaust manifold connected by a tube to the carburetor.

All 8 cylinder models use an automatic choke heat tube which is a press fit into a reamed hole in the exhaust manifold. The air in the tube is heated by the exhaust gases and a connecting tube conducts this heated air to the carburetor choke control. The tube can be replaced by removing exhaust manifold and drilling the tube out.

Automatic choke control is used on all models. Manual exhaust damper is used on Models 10 and 18. Automatic exhaust damper is used on Models 11, 12, 14, 15, 17. See "Chassis Section" exhaust group.

MANUAL EXHAUST DAMPER. The models 10, 18 are fitted with a manual heat control valve mounted at the center of the exhaust manifold. This valve should be set so that the arrow on its cover points straight up to the "W" cast on top of manifold for summer and winter.

All other models are fitted with an automatic heat control valve which is controlled according to the under hood temperature by a thermostatic coil.

CRANKSHAFT

CRANKSHAFT PIN SIZE CODE. Some engines are built with .010" undersize crank pins only or .010" undersize crankshaft bearing journals only or with .010" undersize crank pins and bearing journals.

To identify each of these three conditions in an engine the following markings are used:

PU means crankshaft has .010" undersize crank pins.

MU means crankshaft has .010" undersize crankshaft bearing journals.

PMU means crankshaft has .010" undersize crank pins and also .010" undersize crankshaft bearing journals.

These identification marks are stamped on the bottom face of the cylinder block at the left front corner in the clear area beyond the surface covered by the oil pan gasket. The letters can be seen without removing the oil pan.

CRANKSHAFT BEARINGS are bronze backed and the radial clearance is .001" and the end play from .006" to .012".

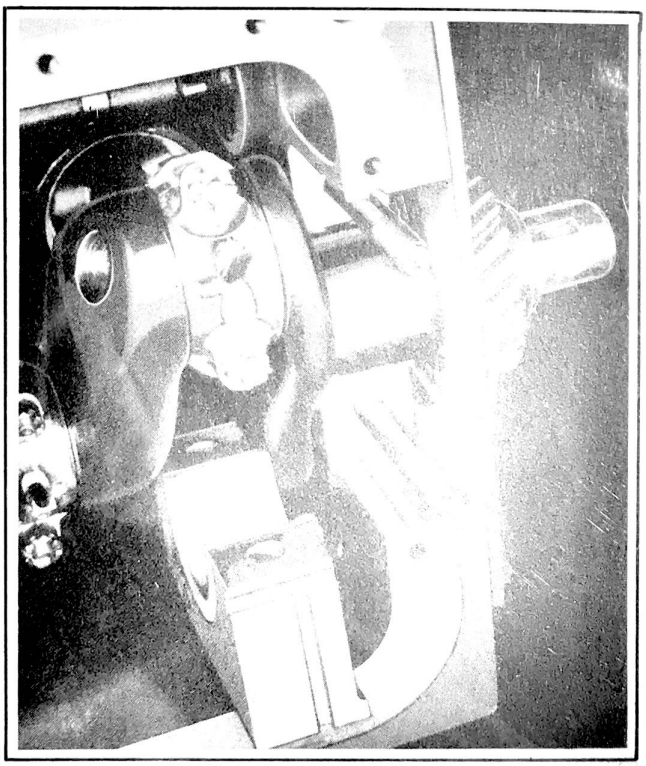

Figure 154 - Crankshaft Front Bearing Cap

CRANKSHAFT BEARING CAPS. The upper and lower halves of the crankshaft bearings are each held in place in the crankcase and bearing caps by machine screws. The front and rear caps enter machined openings in the crankcase so that they are flush with the bottom of the case.

Crankshaft bearing caps are fastened by heat treated plain washers, hexagon nuts and companion nuts.

Crankshaft bearing caps are not adjustable as no shims are used. *Never file the caps to reduce clearance. Use new factory line-reamed bearings.*

Tighten crankshaft bearing cap bolt nuts with a torsion wrench to 75 foot pounds.

Vertical and horizontal packing holes are used in the front bearing caps (See Fig. 158 showing packing holes). No horizontal holes are used in the rear cap.

The front and rear bearings can be centralized on the studs for proper bearing alignment by placing a piece of 1/4" drill rod in the vertical packing holes before tightening the nuts and before inserting packing.

Front and rear bearing caps have to be removed with a puller because sufficient force has to be used to shear off the packing in the grooves. *The packing should be thoroughly cleaned from the grooves in the case and the cap.*

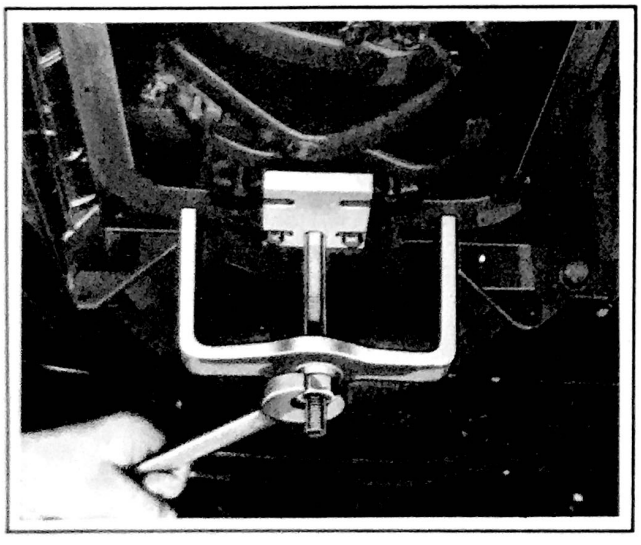

Figure 155 - Removing Main Bearing Caps with Tool J-377

CAUTION: None of the packing should be allowed to remain in the case as it might clog the oil passages.

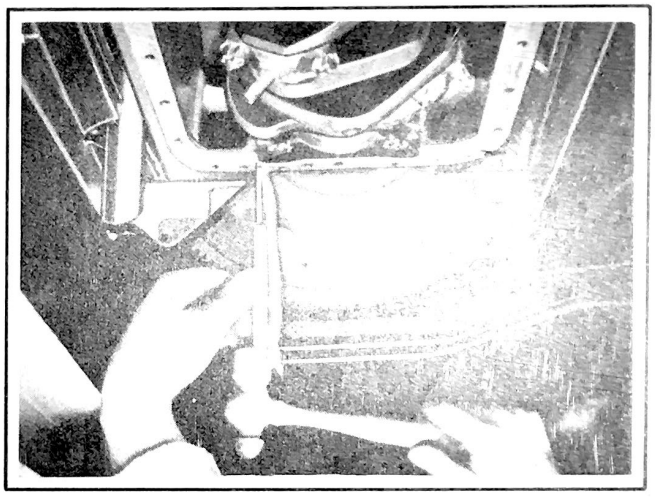

Figure 156 - Crankshaft Bearing Packing Inserter Tool J-392

After the bearing caps have been replaced and the stud nuts tightened to 1100 inch pounds torque tension, the companion nuts must be installed. Spin companion nut with smooth face first onto the bolt until it touches the nut. Then tighten the companion nut with a wrench 1/4 to 1/3 turn more in order to lock it. The packing should be replaced.

Drive cotton wicking into the front bearing cap vertical hole first, then drive the cotton wicking into the horizontal holes of the front and re bearing cap.

CRANKSHAFT GEAR is changed so that the teeth now have a 20° pressure angle. It has 28 teeth with the number "20" on the front face and it also has the word "Front" cast onto the front face.

A crankshaft or camshaft gear of the new 20° tooth pressure angle must never be used with a gear of the old tooth pressure angle. Both gears must be of the new type.

CRANKSHAFT REMOVING AND INSTALLING.

1. Drain cooling system.

2. Remove bonnet.

3. Remove radiator hoses and radiator.

4. Remove starting crank jaw and vibration dampener - see Page 000.

5. Remove fan blades, loosen generator and remove fan belt.

6. Remove timing gear cover.

7. Remove camshaft gear (3 bolts).

8. Remove crankshaft gear.

9. Remove transmission assembly - see Section 8.

10. Remove clutch assembly - See Section 7.

11. Remove flywheel.

12. Remove oil reservoir.

13. Disconnect connecting rods from crank and push up out of the way.

14. Remove front and rear bearing caps with tool J 377 and clean packing thoroughly from caps and cylinder block.

15. Remove center bearing cap and lower crankshaft from car.

CAUTION: The crankshaft will drop with the loosening of the center bearing cap; therefore, extreme care must be observed when removing this center bearing.

16. Replace crankshaft and replace center bearing cap to hold crankshaft in place.

17. Replace remaining bearing caps and draw up nuts to 1100 inch pounds of torque tension, repack front and rear caps with cotton wicking with tool J 392.

18. Attach connecting rods to crankshaft, tightening to 630 inch pounds of torque tension.

19. Replace oil reservoir.

20. Replace flywheel.

21. Replace clutch assembly - see Section 7.

22. Replace transmission assembly - see Section 8.

23. Replace crankshaft gear.

24. Replace camshaft gear.

25. Replace timing gear cover.

26. Replace vibration dampener and starting crank jaw.

27. Replace fan blades, fan belt, adjust and tighten generator mounting bolts.

28. Replace radiator and radiator hoses.

29. Replace bonnet.

30. Refill cooling system.

31. Tighten crankshaft to flywheel bolt nuts with a torsion wrench to 45 foot pounds.

CRANKSHAFT BEARING LINE REAMING. In cases where new unfinished bearings are being fitted to a badly worn or reground crankshaft, the bearing caps should be installed in the case and then line reamed to size.

On this case the main bearings with the thrust flange must also be faced to allow an .006" end play.

CRANKSHAFT BEARINGS. The lower halves of the bearings are held in the caps with machine screws while the upper halves in the case are also held with machine screws.

CRANKSHAFT BEARING CLEARANCE can be checked by placing a piece of .001" feeler stock 1/2" wide and 1" long in the bearing cap, install the cap and tighten securely. There should be a slight drag when turning the crankshaft. If the crankshaft turns freely, indicating more than .001" clearance, install new factory lined bearings.

Do not fit bearings to more than .001" as it is not necessary with the Hudson Duo-flo oiling system and will cause noise if clearance is excessive.

Crankshaft bearings are not adjustable as no shims are used. *Never file the crankshaft bearing caps to reduce clearance.* Install new factory lined crankshaft bearings when bearing clearance exceeds .001".

The front and rear bearings can be centralized on the studs for proper bearing alignment by placing a piece of 1/4" drill rod in the vertical packing holes before tightening the nuts and before inserting the packing.

The crankshaft bearings should have a maximum of .001" clearance and not over .006" to .012" end play.

End thrust is taken at the center main bearing flange in the 6 cylinder engine and at the No. 3 main bearing flange in the 8 cylinder engine.

Bearings can be supplied in individual sets (upper and lower) finished to standard size or .010" undersize, or in a semi-finished state to permit line reaming.

Finished standard size bearings can be put in place in the case, fastened with the retaining screw and adjusted to the proper clearanoe by selection of shims without the necessity of scraping or reaming.

.010" undersize finished bearings may be installed where the crankshaft is worn or has been reground.

REAR CRANKSHAFT BEARING OIL RETAINER. After the rear crankshaft bearing cap has been removed and reinstalled, the lower half of the oil retainer should be checked to see that it fits tightly against the upper half and also to see that the gaskets are in good condition.

CAUTION: A gap between the two halves of the retainer will permit loss of oil.

CYLINDER HEAD

CYLINDER HEAD REMOVING AND INSPECTION. Remove all cylinder head nuts.

The cylinder head has lugs cast along the left side to allow a pinch bar to be used to pry it loose from the gasket.

The seal between the head and the gasket can usually be broken by cranking the engine with the starter after the spark plug wires have been removed and the ignition off.

One stud nut should be left on loosely both at the front and rear to prevent the head being lifted completely off.

In rare cases it may be necessary to lift the head off with a chain hoist and two eye bolts screwed into the spark plug holes.

If necessary to hit the cylinder head with a hammer in order to ease it off the studs use a rawhide hammer only.

Check the surface of the cylinder head and cylinder block for particles of dirt or carbon. Clean thoroughly.

If there is reason to suspect a badly overheated engine, check each surface with a long straight edge.

Long service with many miles of hard driving will sometimes cause a condition as illustrated in Fig. 157. The stud has thrown up a burr around the top of the threaded portion. It is evident that the head gasket will be pinched tightly at this point, and these high spots will

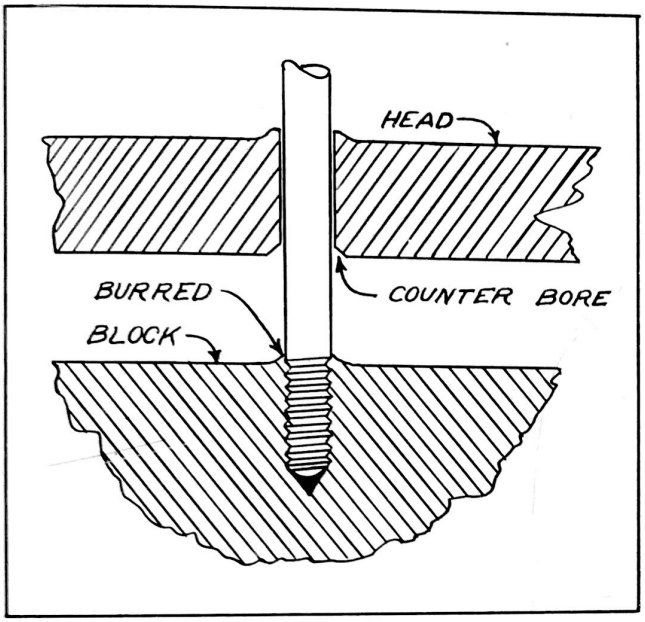

Figure 157 - Burr on Cylinder Block

not allow the gasket to be tightly pressed down at all points.

Counterbore the stud holes in such cases as shown in Fig. 157.

CYLINDER HEAD GASKET. A light coating of Perfect Seal Gasket Paste should be applied to both faces of the gasket.

We recommend Perfect Seal Gasket Paste as being superior because it will not dry out, crystalize, or form a cement, and best of all it WILL NOT dissolve in oil, gasoline, water or anti-freeze. Yet the gasket can be removed easily at any time.

See Hudson Perfect Seal applicator kit (Part No. 152172) or 3 ounce tube (Part No. 47567) or 8 ounce tube (Part No. 47568).

Install gasket on the cylinder block so that the letters on the gasket are on top.

WATERJACKET COVER BOLTS should be tightened with a torque wrench to 15 foot pounds.

CYLINDER HEAD STUD NUTS. Install head on the gasket and put on all the stud

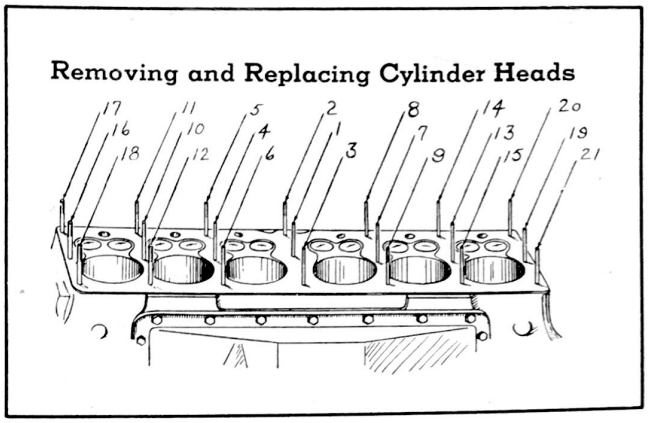

Figure 158 - Sequence of Tightening Cylinder Head Stud Nuts

nuts and turn them down as far as possible with the fingers.

The nuts should be tightened to 40 foot pounds (540 inch pounds) on the 6 cylinder and 50 foot pounds (650 inch pounds) on the 8 cylinder with a torsion wrench. Tighten nut very carefully, each one a little at a time, so that no one particular nut gets excessive tension.

The following plan has proven most satisfactory whether used for the 21 nuts of the 6 cylinder engine or the 30 nuts of the 8 cylinder engine.

Start with middle nut No. 1. Pull down the nut until it is just snug or just starts to take hold. Pull down in the following order.

1 - 4 - 10 - 16 - 7 - 13 - 19 just snugly.

Go back to No. 1 and pull down fairly tight, then

1 - 2 - 3 - 4 - 5 - 6 - 7 - 8 - 9 - 10 - 11 - 12 - 13 - 14 - 15 - 16 - 17 - 18 - 19 - 20 - 21

Go back to No. 1 and pull down very tight, then

1 - 2 - 3 - 4 - 5 - 6 - 7 - 8 - 9 - 10 - 11 - 12 - 13 - 14 - 15 - 16 - 17 - 18 - 19 - 20 - 21

Run the engine and warm it thoroughly, then while still warm tighten.

1 - 2 - 3 - 4 - 5 - 6 - 7 - 8 - 9 - 10 - 11 - 12 - 13 - 14 - 15 - 16 - 17 - 18 - 19 - 20 - 21

PISTON

PISTON CONSTRUCTION. The cylinder bores are fitted with T slot low expansion silicon aluminum alloy cam ground pistons.

The pistons are fitted with four rings, two of which are 3/32" wide compression rings, pinned in place above the piston pin, and two 3/16" wide oil control rings. One of the oil rings is located above the piston pin and the other below the piston pin. The oil control rings are also pinned in place to prevent rotation in the ring grooves.

CAUTION: The piston pin bosses in the pistons are diamond bored giving a highly finished accurate piston pin bearing. Do not ream the piston pin bosses; use oversize pins and ream the bronze bushing for the piston pin in the connecting rod.

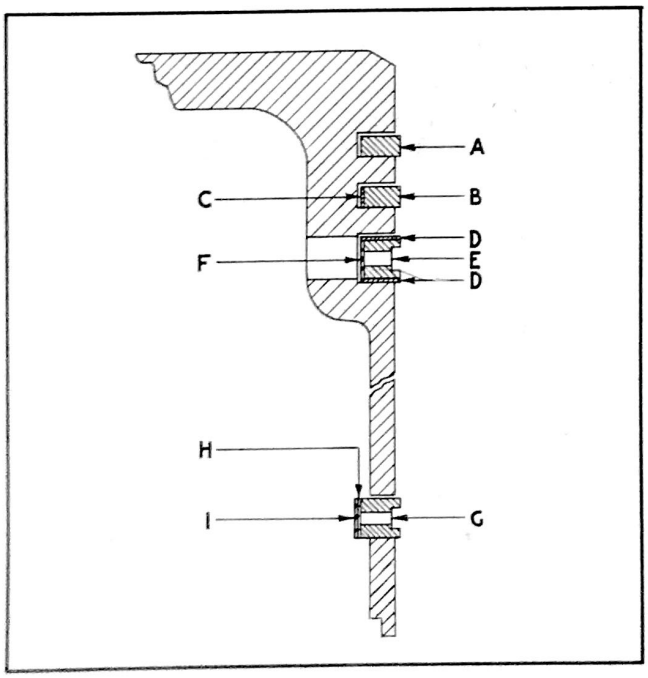

Figure 159 - Expanding Piston Ring Kit

EXPANDING PISTON RING SERVICE KIT

Two service kits are available, both are for 6 cylinder engines. However, one kit is for engines having a lower oil ring 5/32" in thickness and the other kit for engines having a lower oil ring 3/16" in thickness.

Part No. 161781 Kit is for 6 cylinder engines having a lower oil ring 5/32" thick. The kit contains (See Fig. 159):

6--161782 Upper Compression Ring "A"
6--161783 Lower Compression Ring "B"
6--161784 Lower Compression Ring Expander "C"
12--161785 Oil Wiper Ring "D"
6--161786 Upper Oil Ring "E"
6--161787 Upper Oil Ring Expander "F"
6--161788 Lower Oil Ring "G"
6--161790 Lower Oil Ring Expander "H"
6--161791 Lower Oil Ring Expander Seat "I"

Part No. 161780 Kit is for 6 cylinder engines having a lower oil ring 3/16" thick. The kit contains (See Fig. 159):

6--161782 Upper Compression Ring "A"
6--161783 Lower Compression Ring "B"
6--161784 Lower Compression Ring Expander "C"
12--161785 Oil Wiper Ring "D"
6--161786 Upper Oil Ring "E"
6--161787 Upper Oil Ring Expander "F"
6--161789 Lower Oil Ring "G"
6--161787 Lower Oil Ring Expander "H"
6--161792 Lower Oil Ring Expander Seat "I"

To service an 8 cylinder car it is necessary to obtain extra parts from a second 6 cylinder kit.

EXPANDING PISTON RING INSTALLING. The bottom groove in the piston is for the lower oil ring. Install one lower oil ring expander seat with the spurs or prongs on the inside of the seat in the opening that is opposite the pin. These spurs dig into the inside of the piston at this point and prevent the seat rotating. This seat prevents the expander from passing

through the opening in the groove. Install one lower oil ring expander with the ends in line with the ring gap. Install the lower piston ring.

3/16" Groove	Name	5/32" Groove
1 of 161792	Expander Seat	161791
1 of 161787	Expander	161790
1 of 161789	Piston Ring	161788

The third groove in the piston (from the top) is for the upper oil ring. Install one 161787 upper oil ring expander with the ends in line with the ring gap. Install two 161785 oil wipers having the ends in line with the ring gap.

The second groove in the piston (from the top) is for the lower compression ring. Install the lower compression ring expander (161784) with the ends in line with the ring gap. Install the upper compression ring (161783).

The top groove in the piston is for the upper compression ring. Install one 161782 compression ring in this groove.

PISTON SIZES. A code letter is stamped on the cylinder block along the lower face of the valve chamber to show the original size of each cylinder.

A code letter and the piston weight (in ounces and quarter ounces) is stamped on the heads of each piston. In addition to these size and weight marks all original factory piston installations are numbered on the head of the piston with the block number and the number of the cylinder in which the piston is fitted.

Example - See Fig. 165 remove the piston from No. 2 cylinder and find marks like these - 547 - (for production information only and used for identifying this piston which is one of a matched set so that it will be installed in the cylinder selected) (the cylinder is also stamped 547 on the front end) B is the code letter on both the piston and the lower face of the valve chamber. 10 over 3 is the weight and means 10-3/4 ounces. 3 (if marked 10 over 1 is 10-1/4 ounces, 10 over 2 is 10-1/2 ounces.) 2 is the number of the cylinder the piston is used in.

When any piston is being replaced it should be of the same weight as the one removed. A complete set of new pistons should always be of the same weight because unequal piston weight will cause rough engine operation.

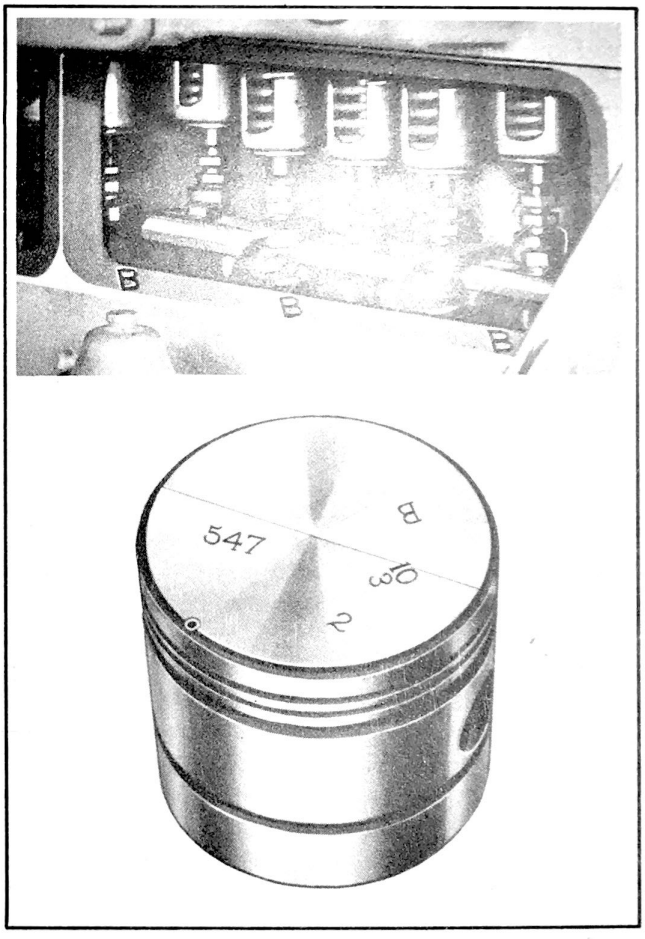

Figure 160 - Cylinder Bore Markings

PISTON SIZES

Cylinder Size	Cylinder Code	Piston Code	Piston Size	Piston Ring Size
3.000	A	B	2.9985	3.000
3.0005	B	B	2.9985	3.000
3.001	C	D	2.9995	3.000
3.0025	D	D	2.9995	3.000
3.002	E	F	3.0005	3.000

Cylinder Size	Cylinder Code	Piston Code	Piston Size	Piston Ring Size
3.0025		F	3.0005	3.000
3.004		J	3.0025	3.003
3.005		L	3.0035	3.005
3.010	AO	BO	3.0085	3.010
3.0105	BO	BO	3.0095	3.010
3.011	CO	DO	3.0095	3.010
3.0115	DO	DO	3.0095	3.010
3.012	EO	FO	3.0105	3.010
3.0125		FO	3.0105	3.010
3.015		LO	3.0135	3.015
3.020		BB	3.0185	3.020
3.021		DD	3.0195	3.020
3.022		FF	3.0205	3.020

The cylinder code is stamped on the lower face of the valve chamber (See Fig. 160) and the piston code on the head of the piston.

The difference between the cylinder size in the chart and the piston size in the chart gives the recommended clearance.

Cylinder bore sizes from standard to .020" oversize are given in this chart and the two recommended piston sizes and ring sizes for each bore size.

Same sizes of piston rings are recommended for more than one piston size and it is always advisable to hone the cylinder to the smallest dimension for which a given ring is recommended. This gives a minimum piston ring gap (gap of not less than .005").

PISTON FITTING. The piston skirt is cam ground and tapered when machined so that it takes a true cylindrical shape when heated. This gives the maximum bearing area at operating temperatures.

The cam grinding of the skirt makes it necessary that a .0015 feeler gauge blade be used directly opposite the skirt slot (See Fig. 161 point "A").

Before fitting pistons remove the ridge from the top of the cylinder with cylinder ridge reamer tool J-592.

After inserting piston in the cylinder with the .0015" feeler gauge in the position described above, the feeler should be movable under a 3 to 4 pound pull. Use tool J-888-A Piston feeler scale to measure this pull.

CAUTION: A thousandth of an inch variation will change the pull on the feeler only a few pounds and the use of this scale will eliminate guessing.

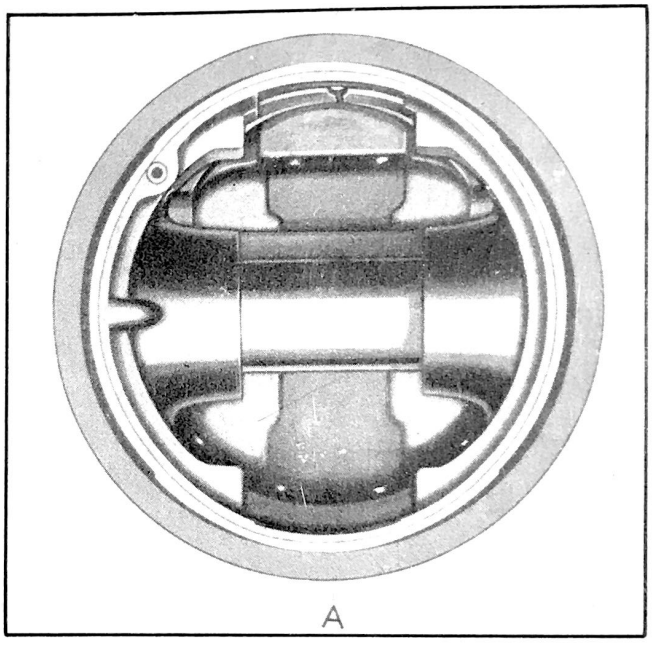

Figure 161 - Piston Clearance

PISTON PINS are of full-floating design. The pin can rotate in the piston and has sufficient movement to equalize wear. The piston pin hole in the piston is diamond bored for close fitting of the pin. The piston pin bushing in the upper end of the connecting rod is of bronze, broach finished and a clearance of .0003" is possible between the pin and the bushing because of the accurate grinding and diamond boring.

We recommend using oversize piston pins to fit the piston boss and new piston pin bushings in the connecting rod, reamed to size.

The care with which the piston pin is made and the careful diamond boring of the piston pin bosses in the piston makes it unwise to attempt to ream the piston.

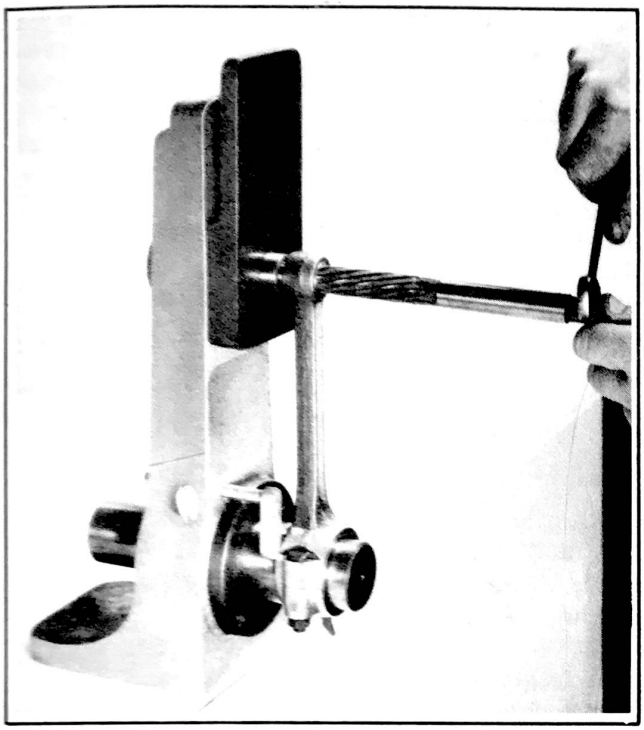

Figure 162 - Piston Pin Bushing Expansion Reamer as used on the Connecting Rod Aligning Fixture J-875H

The piston pin and piston pin bushing should be replaced when necessary by selecting the proper size pin and then reaming the bushing to size. See Fig. 162.

Piston pins are furnished in standard (3/4" or .750") and in .002", .005" or .010" oversizes.

When replacing piston pins select parts which can be pushed into the piston bosses with the heel of the hand when the piston is heated to 200° F.

Heat the piston in boiling water or in an electric furnace. Heating with a blow torch or other concentrated heat or driving the new pin in or out of the bosses will distort the piston.

Having selected the proper pin, replace the piston pin bushing and ream or burnish to .0003" larger than the pin diameter.

Check the fit by holding the piston with the connecting rod in a horizontal position; the rod should just turn on the pin under its own weight.

PISTON PIN SNAP RINGS. The piston pin is held in the piston by snap rings placed at each end of the pin.

Snap rings can be removed by a pointed instrument

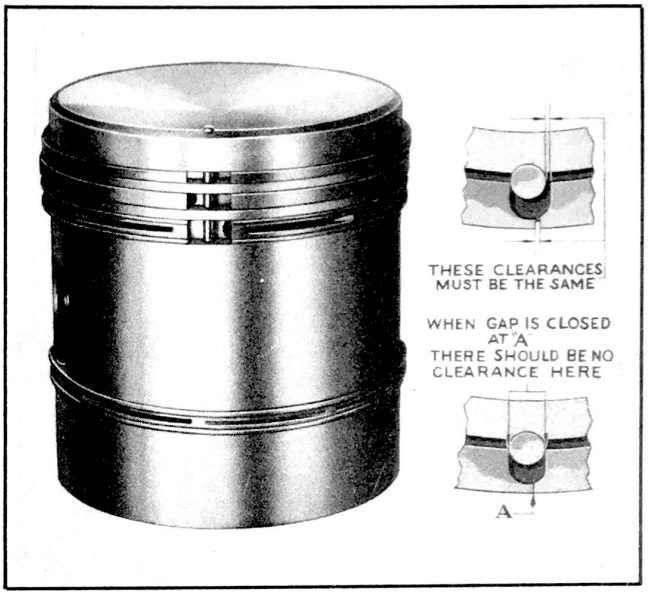

Figure 163 - Piston Ring Clearance

PISTON RINGS as used in HUDSON cars are of the square end type and are pinned to prevent rotation on the piston.

The rings are cut and notched to fit the pin so that the clearance on the pin is equal to the gap between the ends of the ring (Fig. 163). In other words, if the ring is compressed so the ends come together there will be no clearance on the pin.

If the ends of the ring are filed in fitting, it is necessary to file an equal amount in the pin notch to maintain the pin clearance. Filing, however, should not be necessary.

The granoseal is a form of etching by means of which certain undesirable particles that have no wear resisting qualities are eliminated from the finished surface leaving a black and seemingly

rough surface on the entire ring. The surface, however, acts as a series of minute oil reservoirs and tends to improve lubrication.

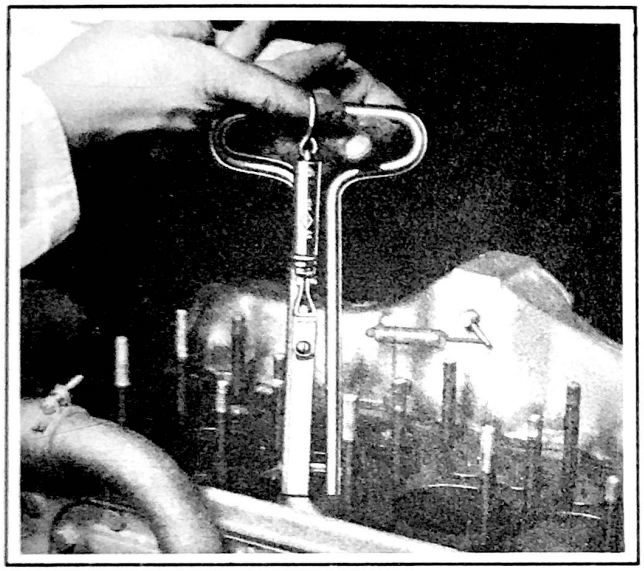

Figure 164
Piston Feeler and Scale Tool J-888

Piston rings of the pinned type are supplied in exact sizes to give a minimum gap of .005" when ring is compressed. Since it is generally necessary to hone or otherwise recondition a cylinder bore when oversized pistons are being fitted, they should be brought to an exact size for which piston rings are available.

EXAMPLE - A cylinder may clean up at .009" oversize. Since no ring is available in this size it is advisable to hone the cylinder to .010" oversize rather than to file the gap of a set of .010" oversize rings to permit their use in a .009" oversize cylinder.

Piston rings are avaliable in the sizes shown in the table on Page 141-2.

CONNECTING RODS

The connecting rods are of drop forged steel. The connecting rod bolts are of centerless ground type fitted in reamed holes. The connecting rod bolt nuts are locked by a special spring steel companion nut.

The connecting rods have steel side thrust faces. A lead alloy bearing metal is used to line the connecting rods and the lining thickness is .015". This thickness of the lining plus the elimination of babbit thrust flanges (by carrying out the steel forging to the full width at the bottom end) permits quick heat dissipation and reduces the tendency of the bearing to flake or pound out under severe driving conditions.

The radial at the connecting rod big end is .001" and the end clearance is .006" to .010".

CONNECTING RODS ARE RIGHT AND LEFT HAND; the crankshaft end being offset on the rod proper.

6 cylinder engines.
Connecting Rods 1-2 and 4 are Right hand.
Connecting Rods 3-5-6 are Left hand.

8 cylinder engines.
Connecting Rods 1-3-5-7 are Right hand.
Connecting Rods 2-4-6-8 are Left hand.

Genuine Hudson Connecting Rods in an engine overhaul insures the very careful Hudson process of babbitting.

A continuous babbitting procedure is used and the rod is protected between operations so as to avoid oxidizing before babbitting. A special process of bonding the bearing metal to the forged rod is used to prevent separation and consequent disintegration of the bearing metal.

Genuine Hudson Connecting Rods will extend the life of an engine overhaul by many thousands of miles.

THE CONNECTING ROD BEARING does not lend itself to adjustment.

Never file the connecting rod or its cap to reduce clearance.

Replace connecting rods having improper clearance.

Radial bearing clearance should be .001".

Bearing end play should be from .006" to .010".

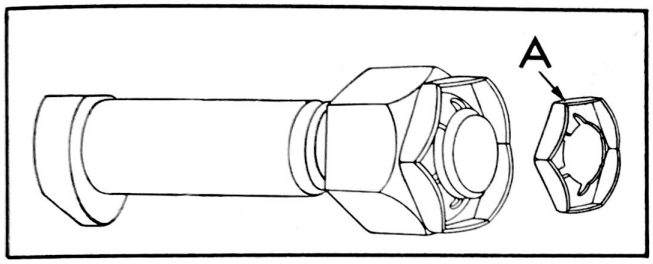

Figure 165
Connecting Rod Bolt Palnut

CONNECTING ROD BOLT NUT LOCK. A light weight companion nut is used in place of a cotter pin in locking the connecting rod bolt nut. This nut is known as a "Palnut", and is a small single thread nut stamped from light gauge steel and tempered.

The palnut tightens down against a plain hexagon nut and locks itself in the bottom of the bolt thread by the compression of the single conical-shaped thread.

Tighten the regular connecting rod bolt nut to 630 inch pounds torque tension with a torque tension wrench.

Place palnut on the bolt with the smooth face against the hexagon nut and spin the palnut with the fingers until it is snug against the hexagon nut. Then tighten palnut with a wrench from 1/4 to 1/3 more to lock it.

We recommend the use of new palnuts when reassembling rods.

THE HUDSON CONNECTING ROD ALIGNING AND REAMING FIXTURE J 874-H consists of a heavy cast base to which is mounted a sleeve bearing for supporting the arbor on which the connecting rods are to be mounted.

The sliding face plate is operated by a knurled nut which allows the face plate to be extended for any length of connecting rod.

The face plate is demountable so that a "V" block can be mounted in its place for aligning the piston when line reaming for oversize piston pins.

The face plate and the "V" block have a guide hole in which there is a removable sliding bushing to receive the pilot end of the reamer.

In order to line up the connecting rod with the face plate or to line up the "V" block with the piston, a stepped arbor is furnished.

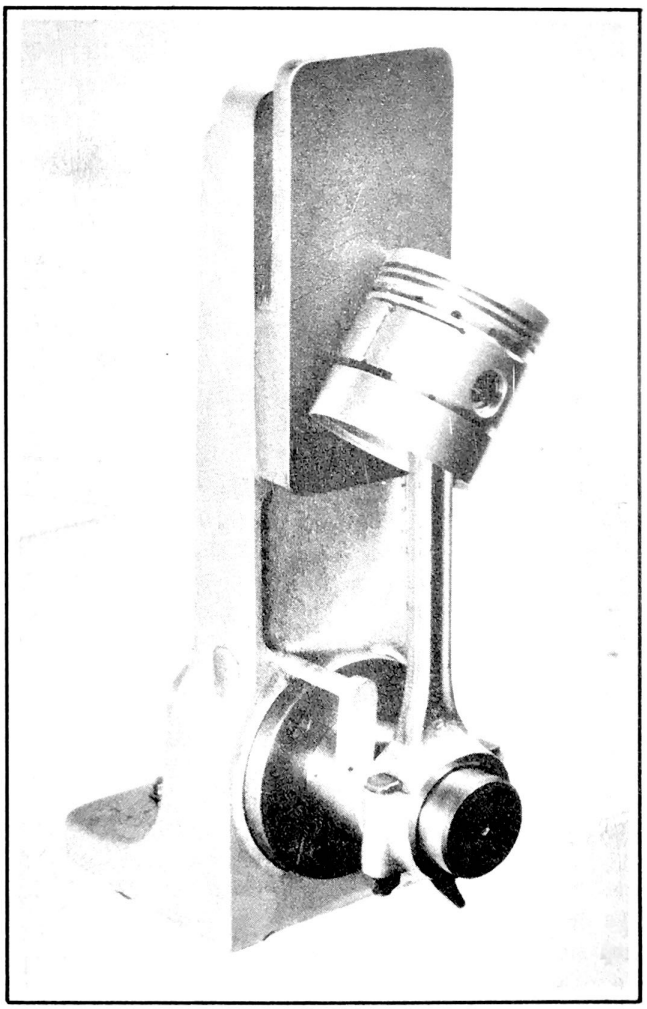

Figure 166 - Setting Piston in Line with the Connecting Rod on J-874H

The U shaped device is for checking the alignment of the piston assembly and for checking the alignment of the piston pin in relation to the face plate.

The connecting rod bearing rod arbor has one step 1-15/16" in diameter for standard and a smaller step for .010" undersize rods.

The piston pin expansion reamer is .750" in diameter.

There is a stop on the base with a set screw for setting the piston in line with the connecting rod. This stop should be set as shown in Fig. 166.

THE CONNECTING ROD ALIGNING AND REAMING FIXTURE J 874-H is used to accurately check the alignment of the piston and the pin with the connecting rod bearing.

The connecting rod is clamped on the arbor (Fig. 167) and the "V" block is placed against either the piston or the piston pin. The amount of misalignment will be shown between the pins on the "V" block and the face plate on the fixture.

CONNECTING ROD COCKED OR BENT. To check the rod on this fixture, place the piston pin in the rod and assemble the rod and the pin to the arbor on the fixture. Place the "V" block on the piston pin and move the rod and arbor toward the face plate. The vertical pins on the "V" block will indicate a bent or cocked rod.

EXAMPLE - If the two top pins rest against the face plate and the two bottom pins are away from the face plate, the connecting rod is cocked or bent. If the two bottom pins rest against the face plate and the top pins are away from it, the rod is cocked or bent.

CONNECTING ROD TWISTED. Proceed as under "Connecting Rod Cocked or Bent".

If the two horizontal pins, on the front side, rest against the face plate and the two back pins are away from it then the rod is twisted.

Also, if the two back pins rest against the face plate and the two front pins are away from the face plate, it indicates that the rod is twisted.

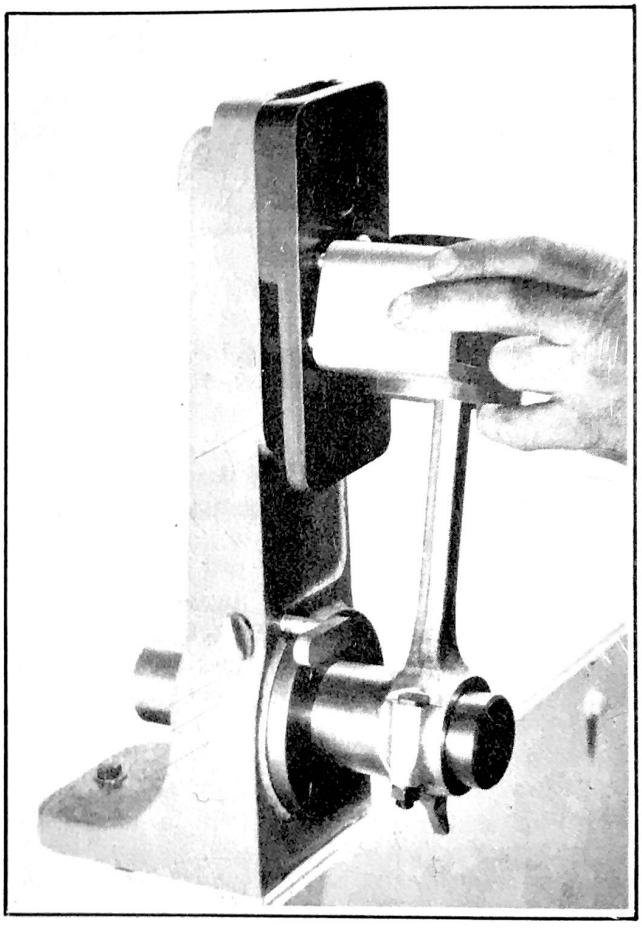

Figure 167 - Connecting Rod Alignment with V Blocks on Fixture J-874H

CONNECTING ROD STRAIGHTENING. The Connecting Rod Aligning and Reaming Fixture J 874-H is strong enough to hold the connecting rod during any straightening operation which can be done with the bending tool H M 3-R.

Always bend beyond the straight position and then bend back to straight so as to relieve the strains that are set up by bending. If this is not done the rod will not remain straight after it is installed in the engine.

All four pins of the "V" block will touch the face plate when the rod is straight.

CONNECTING ROD OFFSET. Place "V" block on the piston pin so that it rests against the outside edge of the connecting rod and then move the rod and "V" block toward the face plate until all four pins touch it.

The index (on the bottom of the fixture) is then placed so that it touches the large end of the connecting rod bearing.

Remove the rod from the arbor and turn it around. Assemble it on the arbor and place the "V" block on the piston pin in the same place as when the other side was checked.

Move the rod and the "V" block toward the face plate until either the index touches the bearing or the pins touch the face plate.

If the index does not touch the rod bearing with the four pins touching the face plate then the distance between the rod bearing and the index should be checked with a feeler gauge.

If this distance is more than .025" the rod should be straightened until both the pins touch the face plate and the index touches the rod bearing within .025".

Use two bending bars H M 3-R, one to hold the rod and the other to bend the rod into the proper position.

If the index touches the rod bearing and the four pins do not touch the face plate, the distance between the pins and the face plate should also be checked with a feeler gauge.

If this distance is more than .025" the rod should be straightened until the pins on the "V" block touch the face plate and the index touches the rod bearing within .025".

CONNECTING ROD WITH PISTON-ALIGNING. Assemble the connecting rod to the piston and lock the piston pin by means of the piston pin snap rings.

Assemble the piston and connecting rod assembly to the alignment fixture and check with the "V" block resting against the piston skirt to see that the rod and piston are in alignment.

Both pins on the "V" block should rest against the face of the plate on the fixture.

The piston should be in the same alignment as the connecting rod when this check is made.

CONNECTING ROD ALIGNMENT - QUICK CHECK of a piston and connecting rod assembly can be made for both twist and cock without disassembling the piston from the connecting rod.

Mount the connecting rod and piston assembly on the alignment fixture and set the piston in line with the connecting rod.

Place the "V" block on the piston skirt and if both pins on the block contact the face plate then the rod is not cocked. (Fig. 167).

With the "V" block on the piston skirt and the pins against the face plate, tip the piston first in one direction and then in the other.

If the pins on the "V" block follow the face plate there is no twist in the connecting rod, but if one pin leaves the face plate while the piston is being tipped in one direction and the other pin leaves the face plate while the piston is in the other direction, then the connecting rod is twisted and should be straightened until both pins follow the face plate.

PISTON PIN BUSHING REAMER. The bronze bushing in the top of the connecting rod

for the piston pin can be reamed to size on the connecting rod aligning and reaming fixture J 874-H.

Place the connecting rod on the arbor and tighten it.

Insert the reamer pilot in the upper hole in the fixture face plate and align bushing hole of rod with pilot hole in face plate.

Insert reamer pilot bushing in upper hole in fixture.

Insert reamer thru connecting rod bushing and into pilot bushing.

Perform reaming operation.

CONNECTING ROD AND PISTON REMOVAL. The 6 or 8 cylinder connecting rods and pistons can be removed from the top and the 8 cylinder connecting rods and pistons can be removed from either the bottom or top.

Remove oil pan and connecting rod caps and also remove cylinder head on 6 cylinder engines.

TIMING GEAR

TIMING GEAR COVER REMOVAL. Drain cooling system (Petcock at bottom of radiator and 1/8" pipe plug near lower rear corner of water jacket cover).

Loosen generator mounting bolt nuts and remove fan belt.

Remove radiator outlet hose.

Remove Vibration Dampener - See Page 151.

Removing timing gear cover bolts:
Timing gear cover
Timing gear cover gasket
Vibration dampener spacer

Remove leather oil seal in cover.

Before installing a new oil seal apply a coating of red lead or white lead in the recess in the timing gear cover and make certain that the oil seal is pressed tightly in place.

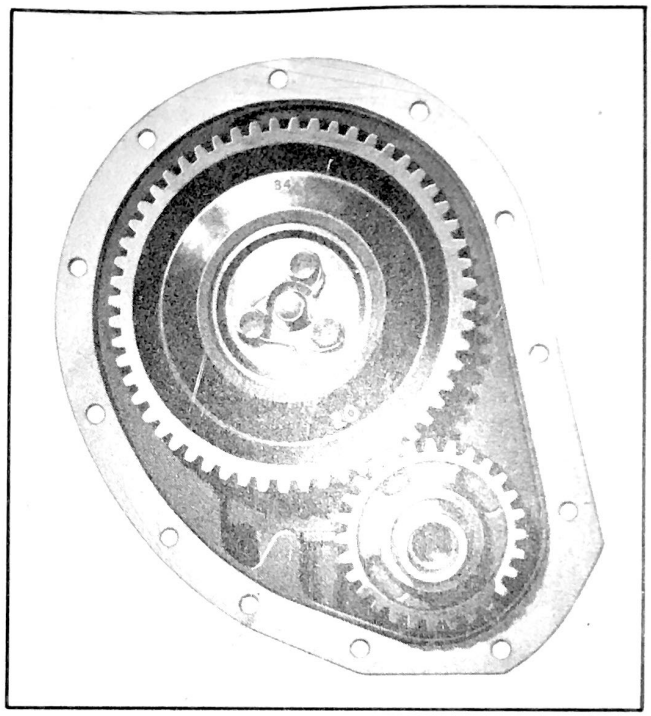

Figure 168 - Timing Gear Markings

TIMING GEAR COVER INSTALLING is the reverse order of removal.

Check leather oil seal to be certain that it is not curled over, as this will cause oil to seep thru.

Use a new timing gear cover gasket.

TIMING GEAR COVER has a hydraulic leather oil seal which fits closely over the vibration dampener spacer to prevent oil leaking out of the front end. The oil seal is a tight press fit in the cover and can be replaced when necessary.

When installing the timing gear cover always replace the two special bolts in exactly the same holes from which they were removed. These two bolts are located at the lower left hand corner of the timing gear cover.

THE CAMSHAFT GEAR OF LAMINATED FIBRE is changed so that the teeth now have a

20° pressure angle. It has 56 teeth and the number "20" is on the front face to show the tooth pressure angle, also to distinguish it from the camshaft gear used on former models.

A camshaft or crankshaft gear of the new 20° tooth pressure angle must never be used with a gear of the old tooth pressure angle. Both gears must be of the new type.

TIMING GEAR LASH. The camshaft gear is of laminated fibre and the crankshaft gear is cast iron.

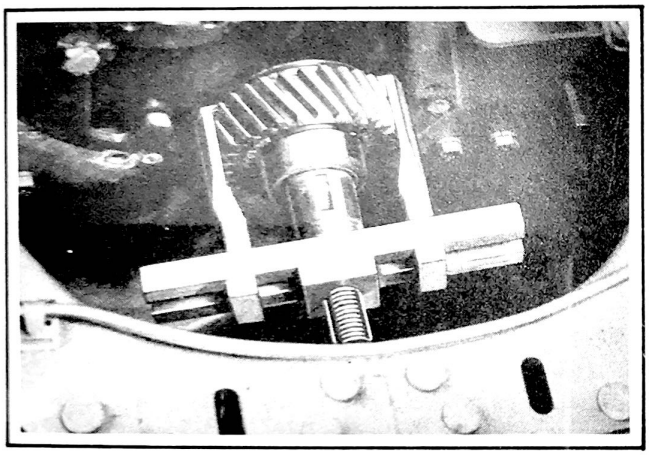

Figure 169 - Crankshaft Gear Pulling with Tool J-471

A special .008" oversize camshaft gear is available for service replacement. This gear may be identified from the standard gear by a spot of yellow paint on the front face.

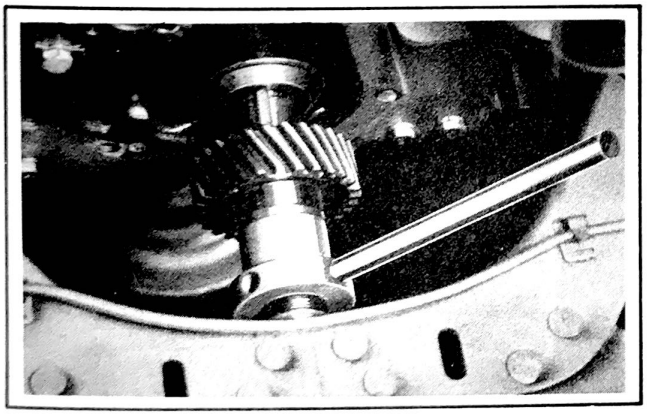

Figure 170 - Crankshaft Gear Replacing with Tool J-483

The gear lash should be from .002" to .003" on the 6 cylinder engine and .004" to .005" on the 8 cylinder engine.

TIMING GEAR REMOVAL. Drain cooling system (Petcock at bottom of radiator and 1/8" pipe plug near lower rear corner of water jacket cover).

Loosen generator mounting bolt nuts and remove fan belt and radiator outlet hose.

Remove Vibration Dampener (See Page 151.)

Remove timing gear cover bolts:
Timing gear cover
Timing gear cover gasket
Vibration dampener spacer

Turn engine over until timing gear marks on face of gear coincide (Fig. 168).

Remove camshaft gear (3 cap screw and a lockwire).

Remove crankshaft gear using crankshaft gear puller Tool J 471.

TIMING GEAR INSTALLING. Reverse the order of removal.

Correct timing is obtained by meshing the punch marked tooth of the crankshaft gear between the two punch marked teeth of the camshaft gear.

The crankshaft gear should be replaced with the crankshaft gear replacing Tool J 483.

CAMSHAFT

The camshaft is of iron alloy and electric furnace hardened. The 6 cylinder 3" x 4 1/8" engine camshaft is different from the 3" x 5" 6 cylinder shaft.

The *granoseal* process of treating is used which is a form of etching by means of which certain undesirable particles

that have no wear resisting qualities are eliminated from the finished surfaces of both the cams and other parts of the shaft.

This process produces a black and a seemingly rough surface on the entire shaft. The surface, however, acts as a series of minute oil reservoirs and provides a cushion of oil for the tappets, bearings and gears during operation. The life of all these parts is greatly prolonged.

A compression spring in the front end of the camshaft prevents end play and holds the shaft against a fibre thrust washer under the head of the shaft.

CAMSHAFT REMOVAL. Drain cooling system (Petcock at bottom of radiator and 1/8" pipe plug near lower rear corner of water jacket cover).

Remove bonnet.

Remove radiator.

Remove louvre panel assembly.

Remove starting crank jaw and vibration dampener - See Page 151.

Remove fan blades. Loosen generator and remove fan belt.

Remove timing gear cover.

Remove camshaft gear (3 bolts).

Remove valve chamber cover.

Remove valves and tappets.

Remove oil pump, fuel pump and distributor.

Remove camshaft with the thrust button and spring by pressing down the radiator lower tank shield to give clearance.

CAMSHAFT BEARINGS REMOVING

1. Remove camshaft as described
2. Remove oil reservoir
3. Press out old camshaft bearings

CAMSHAFT BEARING INSTALLING. Always assemble camshaft bearings with the locating notch at the top and with the light Bermax chamfer at the front and the 1/16" chamfer at the back of the bearing. The 1/16" chamfer is for assistance to the bearing in entering the crankcase hole.

CAMSHAFT INSTALLING. Press in new camshaft bearings using factory line reamed bearings or factory oversize bearings having the proper wall thickness for line reaming.

Replace oil reservoir and camshaft.

Use new gaskets and a new camshaft thrust washer.

Apply a light coating of engine oil to all of the camshaft bearings before putting the camshaft in place.

Tighten valve tappet guide clamps. Recheck to see that they are secure.

Tune-up engine. See Engine Tune-Up Section.

CAMSHAFT THRUST WASHER should be inspected for wear whenever any work is being done that necessitates the removal of the timing gear cover.

A service thrust washer is available that can be split and installed without the necessity of removing the camshaft.

CAMSHAFT BEARINGS REPLACING. Use factory reamed bearings available from the Factory Parts Department. These bearings are finish reamed at the factory sufficiently oversize so that when pressed into place they will be the proper dimensions for running fit, thus eliminating the need for scraping or reaming.

Also available from the Factory Parts Department are the standard bearings with sufficient wall thickness to permit line reaming where proper equipment is available for this operation. When line reaming, these bearings should be reamed to .001" clearance.

VIBRATION DAMPENER

The vibration dampener is mounted on the front end of the crankshaft to absorb the torsional or twisting motion which may be set up in the crankshaft at certain speeds.

The dampener consists of a hub keyed to the crankshaft and a flywheel which is driven from the hub thru two rubber discs. The flexibility of the rubber drive allows a small amount of relative movement between the parts to counteract any tendency of the crankshaft to develop vibration periods.

The dampener flywheel has a V groove for the belt which drives the fan, water pump and generator.

VIBRATION DAMPENER REMOVAL can be accomplished from underneath the car without removal of either the radiator core or louvre panel.

Remove radiator louvre panel center moulding.

Remove front bumper bracket bolts and allow bumper to drop down.

Loosen generator mounting bolts and remove fan belt.

Remove radiator if 8 cylinder car.

Unscrew the crankshaft starting jaw (screws into the end of the crankshaft).

Place jaw of vibration dampener puller over the dampener and place the screw of the puller tool thru the starting crank hole.

Turn the screw to draw off the dampener and remove it from underneath on 6 cylinder, and from the top on the 8 cylinder.

VALVES AND TAPPETS

The tappets are of the roller cam type which closely follow the cam, thus assuring quiet operation. They are adjustable and are set to .006" for intake and .008" for exhaust when hot on the 3" x 5", 6 cylinder and all 8 cylinder. Also on the 3" x 4 1/8", 6 cylinder, if no instruction label is on the valve cover. If there is a label on the valve cover of this 3" x 4 1/8", 6 cylinder engine it will give the tappet clearance as .010" for the inlet and .012" for exhaust, both being hot.

The tappets and tappet guides can be removed without removing the cylinder head as follows:

Follow removal of parts as for tappet adjustment.

Break loose the tappet adjusting screws.
Remove the spring seat retainer using Tool J 915.
Remove the tappet adjusting screw.
Remove spring seats, spring dampeners and springs.
Remove tappet guide clamp screws and clamps.
Remove tappet and guide assemblies.

VALVE TAPPET REPLACING

Replace the tappet and guide assemblies.
Replace the guide clamps.
Replace the springs, spring dampener and spring seats, using Tool J 587-A.
Replace tappet adjusting screws.
Replace spring seat retainer, using Tools J 915 and J 892.
Adjust tappets as given under Valve Tappet Adjustment.

VALVE TAPPET ADJUSTMENT

Jack up front end of car.

Remove right front wheel.

Remove horn mounting bolts and push horn forward out of the way.

Remove fender dust shield to fender bolts, dust shield to frame bolts and fender apron support bolt. Remove dust shield.

Remove valve tappet chamber breather tube.

Remove valve chamber cover.

Set to .006" for intake on 3" x 5", 6 cylinder and all 8 cylinder. Also on 3" x 4 1/8", 6 cylinder engine if a label on the valve cover does not instruct for .010".

Set to .010" for intake on 3" x 4 1/8" engine if there is a label on the valve cover giving this setting.

Set to .008" for exhaust on 3" x 5", 6 cylinder and all 8 cylinder. Also on 3" x 4 1/8", 6 cylinder engine, if a label on the valve cover does not instruct for .012".

Set to .012" for exhaust on 3" x 4-1/8", 6 cylinder if there is a label on the valve cover giving this setting.

Engine running and at normal running temperature.

VALVES. Exhaust valves are of Silichrome alloy steel. Intake valves are of silicon steel and are 1-3/8" in diameter on 6 cylinder engines and 1-1/2" on 8 cylinder. Exhaust head diameters are 1-3/8" on both 6 and 8 cylinder engines.

The valve seats are ground into the chrome alloy cylinder block.

Exhaust valves are fitted to a stem clearance of .004" and intake valve stems to .0025".

VALVE LOCATIONS counting from the front of the engine are -

6 cylinder intake 2-4-5-8-9-11
6 cylinder exhaust 1-3-6-7-10-12
8 cylinder intake 2-3-6-7-10-11-14-15
8 cylinder exhaust 1-4-5-8-9-12-13-16

Valve heads are not slotted and valve grinding can be accomplished by using the pneumatic valve grinder KMO 219.

VLAVE SPRINGS are cadmium plated and of special heat-treated steel wire and are encased in special dampeners or cups to prevent flutter at high speeds. They are set at a temperature far above the normal running temperature so that they maintain their initial strength for many thousands of miles.

Valve springs after they have been removed from the engine should be tested for pressure with Tool U-15.

A new valve spring has a pressure that should be:

40 pounds when compressed to 2"
80 pounds when compressed to 1-21/32"

Valve springs that show a pressure of less than 34 pounds at 2" should be replaced.

VALVE STEM GUIDES are removable. Use valve stem guide remover Tool J-1188 to drive the guides out.

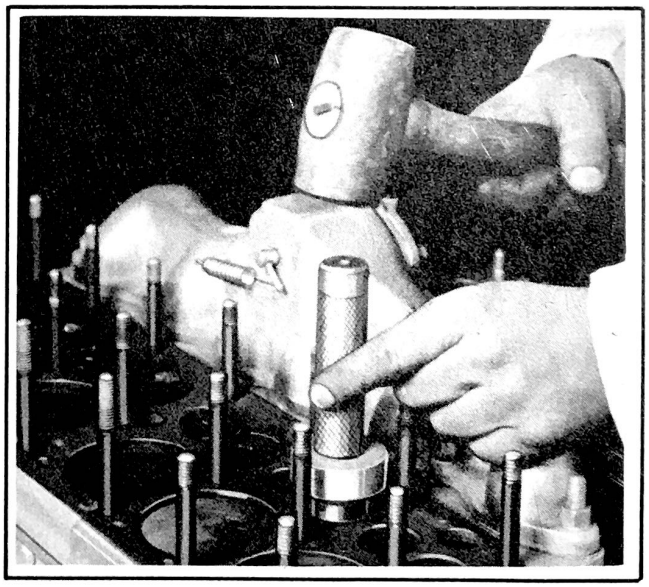

Figure 171 - Valve Stem Guide Replacer Tool J-883A

When replacing the guides use valve stem guide replacer Tool J-883-A. This tool is designed to drive the guides so that the top of the guide in the 6 cylinder engine is 1-1/16" below the top of the cylinder block and in the 8 cylinder

engine 15/16". This position of the guide must be accurately maintained. After the guides are replaced they should be reamed to .002" larger than the valve stem with Tool J-129-2.

VALVE SEAT. Valves that are loose in the valve guides will not stay seated.

Therefore, before grinding valve seats check the valve stems and valve stem guides for wear.

Valve seats should be refaced with a 45° cutting tool. A hard glaze develops on the valve seats and a piece of emery cloth placed over the cutter pilot will remove the glaze. The cutter can then be used without chattering.

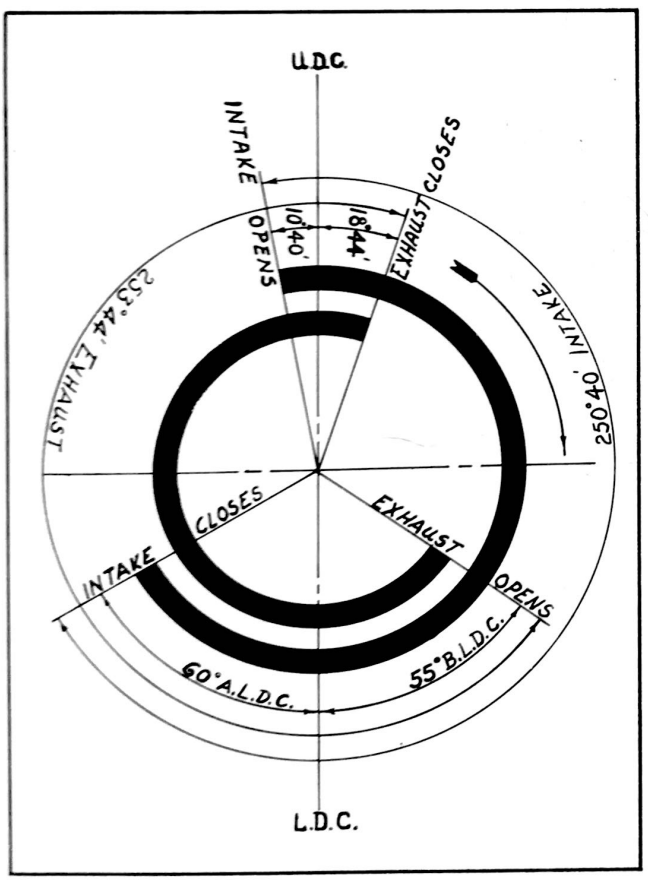

Figure 172 - Valve Timing Diagram

Valve Clearance

For Checking .010"
Running - Exhaust .008"
Intake .006"

VALVE TIMING is determined by the mesh of the timing gears.

The crankshaft gear is keyed to the crankshaft and can be installed in only one position. The camshaft gear fits over the flange of the camshaft and is held by three cap screws. These cap screws are unequally spaced so that the cam gear can be located in only one position.

Correct timing is had by meshing the tooth of the crankshaft gear that has a punch mark on it between the two teeth of the camshaft gear that have punch marks on them. See Fig. 168.

The valve timing for all models is as follows:

Intake valves open 10° 40' B.U.D.C.
Intake valves close 60° A.L.D.C.
Exhaust valves open 50° B.L.D.C.
Exhaust valves close 18° 44' A.U.D.C.

B. U. D. C. is before upper dead center.
A. L. D. C. is after lower dead center.
B. L. D. C. is before lower dead center.
A. U. D. C. is after upper dead center.

VALVE TIMING CHECK. Set number one valve clearance at .010" or for greater accuracy set the clearance at .012" and insert a .002" feeler gauge between the tappet adjusting screw and end of valve stem.

The valve will now just close as the feeler gauge is released, or the valve will be just opening as the feeler gauge is being gripped.

This valve should open with the piston at 10° 40' B. U. D. C. or when the mark on the flywheel which is approximately four teeth before U. D. C. 1-6 or U. D. C. 1-8, lines up with pointer in the hole in the left front face of the rear engine support plate.

With the number one exhaust valve clearance set the same as outlined in the previous paragraph, this valve should close with the piston 18° 44' A. U. D. C. or approximately 7 teeth after U. D. C. 1-8 lines up with pointer in left front face of rear engine support plate.

EXCESSIVE OIL CONSUMPTION

In cases where an exceptional quantity of oil is being used look for these conditions.

Scored cylinders.
Scored pistons.
Piston rings weak or broken.
Piston rings seized in grooves.
Piston rings loose in grooves.
Oil return holes clogged.
Cylinders out of round.
Improper grade of oil.
Inferior oil or diluted oil.
Worn valve guides.

Improper ignition or compression allows unburned gas to dilute the oil on the moving parts and this thin mixture of gas and oil finds its way past the piston rings further diluting the oil in the oil trough and oil pan.

Improper valve seating (see note above)
Sticking valves (see note above)
Cylinder head gasket leaking will cause improper compression and might permit water to enter the cylinders and further dilute the oil.

Also check for oil loss due to leaks.

CYLINDER BORING OR HONING

After reboring the cylinders or honing them it is necessary that they be thoroughly washed after the honing in particular.

All traces of abrasive material will have to be removed or extremely rapid wear of the new parts will result.

Crankshaft bearings, camshaft bearings, connecting rod bearing surfaces on the crankshaft, crankcase walls, in fact the entire part of the engine below the bottom of the cylinder bore must be protected from any and all particles of grit, chips, honing too abrasive stone grit, etc.

Careful washing and careful protection before reconditioning the cylinder bores will save a gread deal of expense later.

REFERENCES

SOURCE OF INFORMATION	DATE	SUBJECT

CLUTCH

SPECIFICATIONS

Engaging spring, Models 10, 11, 18, when compressed to 1-3/4" have a weight of 155 lbs. plus or minus 5 lbs. The Models 14, 15, 17 springs when compressed to 1-5/8" have a wieght of 135 lbs. plus or minus 5 lbs.

Inner springs when compressed to 1-5/8" have a weight of 80 lbs. plus or minus 5 lbs.

Clutch finger alignment .Not over 005" clearance (see instructions)

Clutch throwout finger ..7/64" movement between bottom of finger and cover

Clutch shifter yoke .....13/22" maximum movement

Clutch lubricant .....1/3 Pint of Hudsonite Lubricant only. Fill at front of flywheel

Clutch pedal to floor board .....Clearance 1-1/2" with clutch engaged

Clutch pressure plate warpage permissable ...Not over .010"

Clutch facing .....Cork

Clutch pilot bearing ....Ball

Clutch throwout bearing .Ball
(Lubricate at Zerk Fitting on right side of bell housing every 1,000 miles.)

CLUTCH DIAMETER AND ENGAGING SPRINGS

Model	Clutch Diam.	Outer Spring	Inner Spring
10 all (except with overdrive and 3" x 5" engine)	9"	9	3
11 all and 10 with 3" x 5" engine	9"	9	6
12,18 and all 6 cyl. models with overdrive	10"	12	0
14, 15, 17	10"	12	3

CLUTCH AND BRAKE PEDAL SHANK NUTS. Tighten to 22 foot pounds.

CLUTCH FINGER FULCRUM NUTS. Tighten to 45 foot pounds.

CLUTCH COVER TO FLYWHEEL BOLTS. Tighten to 22 foot pounds.

CLUTCH

The clutch is oil (specially made) cushioned and triple sealed and of the single plate type.

The triple sealing means that the clutch is sealed in front with a leather sealed throwout bearing and sealed around the outside flange against centrifugal action of the oil also sealed at the rear against leakage.

The clutch driving plate has 90 (Model 10 and 11) or 108 (other models) cork inserts inserted into the plate where they are spread and fixed in oil under pressure and heat treated for an hour after which they are cooled in oil and trimmed to a limit of .001".

The clutch pressure plate is of drop forged steel. The flywheel is of steel that is ground and polished and perfectly balanced.

A special clutch lubricant has been perfected by the Hudson Engineering laboratory for use in the clutch and it is called "Hudsonite". One third of a pint

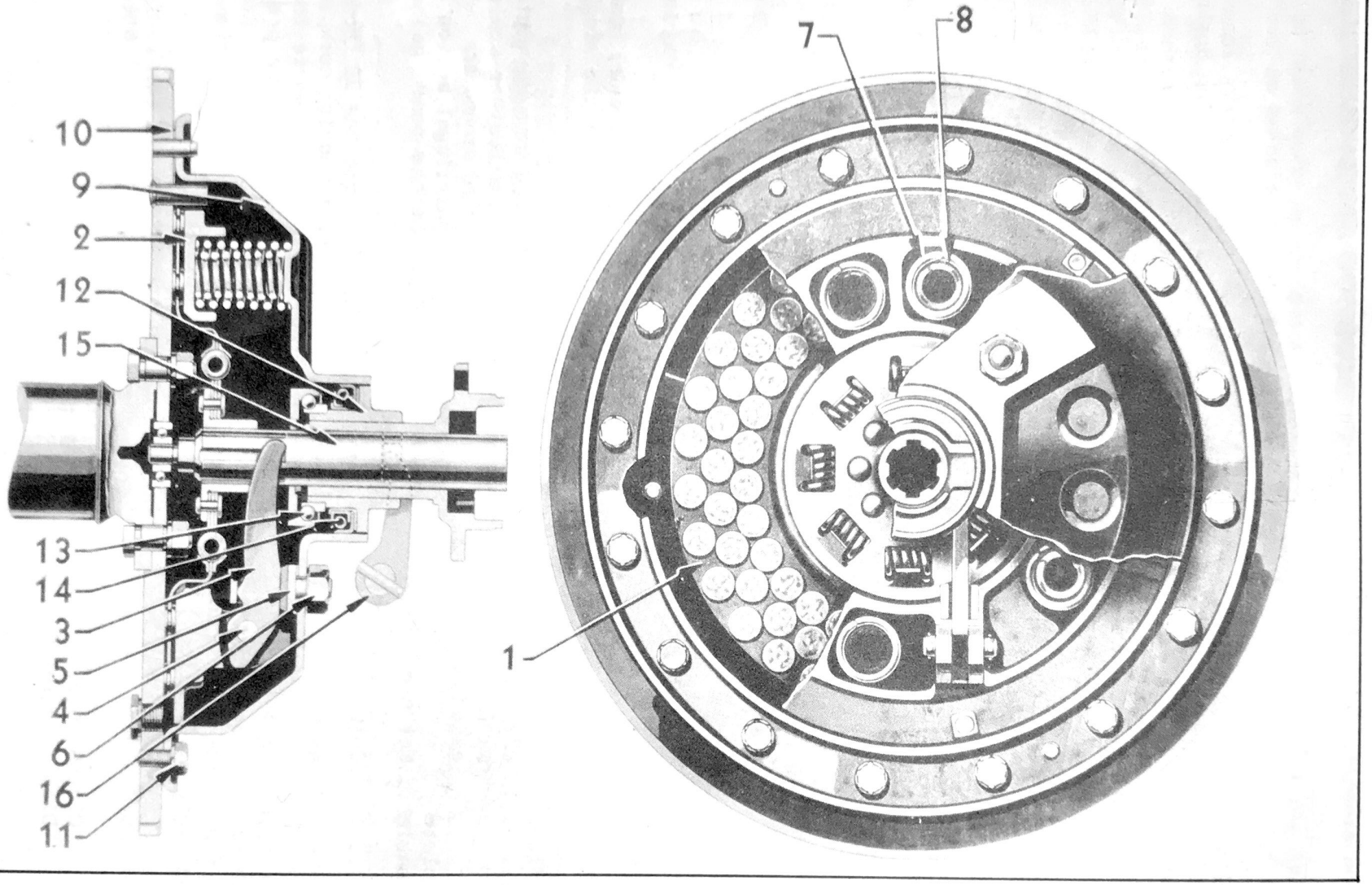

Figure 187 - Clutch Assembly

1. Clutch driving plate assembly
2. Clutch pressure plate
3. Clutch throwout finger
4. Clutch throwout finger pin
5. Clutch throwout finger retainer
6. Clutch throwout finger retainer nut
7. Clutch engaging spring
8. Clutch engaging spring--inner
9. Clutch cover
10. Clutch cover gasket
11. Clutch cover bolt
12. Clutch collar assembly
13. Clutch throwout bearing
14. Clutch oil seal
15. Main drive gear
16. Clutch shifter yoke

is used and it should be changed every 5000 miles. **THE USE OF ANY SUBSTITUTE LUBRICANT MAY CAUSE THE CORKS TO GLAZE AND THE PORES TO CLOSE CAUSING DIFFICULTY OF OPERATION.** If this condition is encountered, flush the clutch with Hudsonite or a solution of carbon tetrachloride and acetone and relubricate with Hudsonite. A few hundred miles of driving will clean the corks and give a normal clutch action.

The Hudsonite lubricant in the clutch, in addition to lubricating the working parts, also cools the friction surfaces and keeps the pores of the cork clean.

The cushioning effect during engagement is obtained by having the corks saturated with lubricant. As the pressure plate and the flywheel come into contact with the cork the lubricant is wiped off the surface and engagement starts.

As the pressure is increased by further release of the clutch pedal the lubricant is squeezed out of the corks providing a film on the frictional surfaces so that engagement is gradual when the surfaces are wiped dry the engagement is complete.

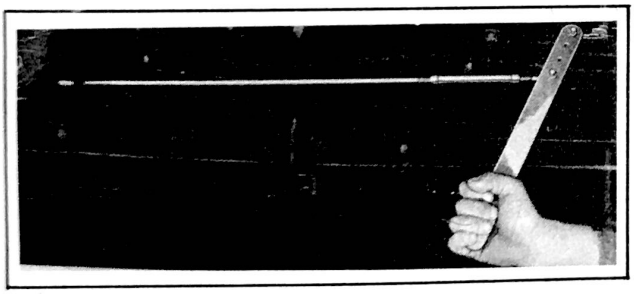

Figure 186 - Clutch Pedal Assisting Spring Removal

CLUTCH PEDAL ASSISTING coil spring is attached to the clutch pedal at one end and a bracket attached to the left frame side member.

This is to assist in disengaging the clutch with a minimum of foot pressure, see Fig. 186.

Hudsonite clutch lubricant can be supplied in -

1/3 Pint can (exactly one filling)
Quart can
Gallon can
5 Gallon can

CLUTCH OPERATION. The rear face of the flywheel and the front face of the pressure plate (2), Fig. 187, bear against the two faces of the driving plate surface (1). The pressure plate is held by springs (7) equally located around the circumference, supplemented in some models by inner springs (8).

The pressure plate is released from the driving plate by three fingers (3) which are mounted on the clutch cover (9) and moved by the ball thrust bearing (12).

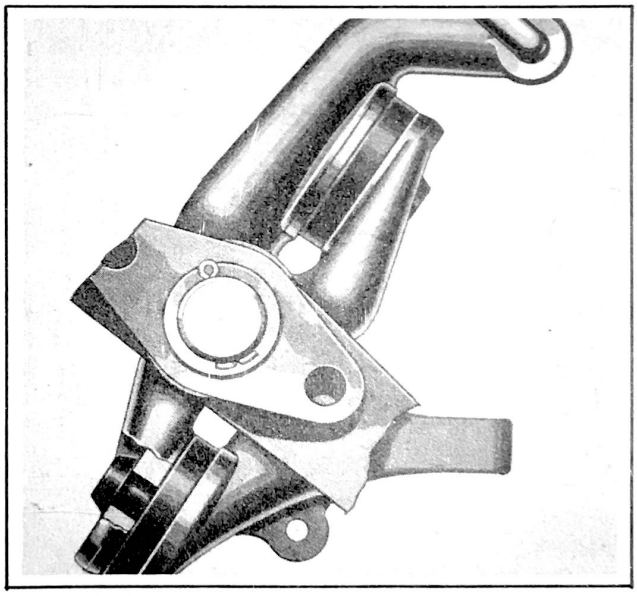

Figure 188 - Clutch Linkage Rubber Pads

CLUTCH LINKAGE. The throwout (12) bearing is operated by a yoke which is connected to the clutch pedal through linkage, part of which is carried in the clutch bell housing and the remainder on the frame.

The connection between these two parts of the linkage is designed to permit the engine to float on its mounting without interference with the clutch operation. The linkage is connected by rubber pads on a double end lever shown in Fig. 188.

These pads bear against a similar coupling lever with rubber pads.

CLUTCH PEDAL ADJUSTMENT. The length of the rod which connects the clutch pedal to the cross shaft lever should be adjusted so that the center of the clutch pedal clamp bolt is 1-1/2" from the toe board-see Fig. 189.

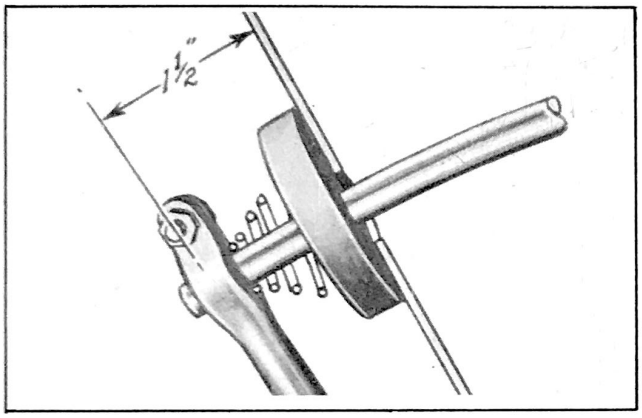

Figure 189 - Clutch Pedal Clearance

Less clearance may cause the pedal to ride the toe board and cause the clutch to slip. More clearance reduces the pressure plate movements with the possibility of preventing complete clutch disengagement and also reduces the load exerted on the linkage by the pedal spring so that rattles may result.

To adjust, loosen lock nut (A). Remove clevis pin (C) and turn yoke (B) to shorten or lengthen the rod as necessary.

NOTE: For owners desiring a lighter clutch pedal pressure, the yoke (B) may be lengthened and assembled in the extreme lower hole in the lever. With this setting the pedal to floorboard clearance should be TWO INCHES instead of the standard 1-1/2" clearance.

Clutch and brake pedal shank nuts should be tightened with a torsion wrench to 22 foot pounds.

TO DRAIN AND REFILL CLUTCH. Remove the plug, Fig. 191, with a socket wrench.

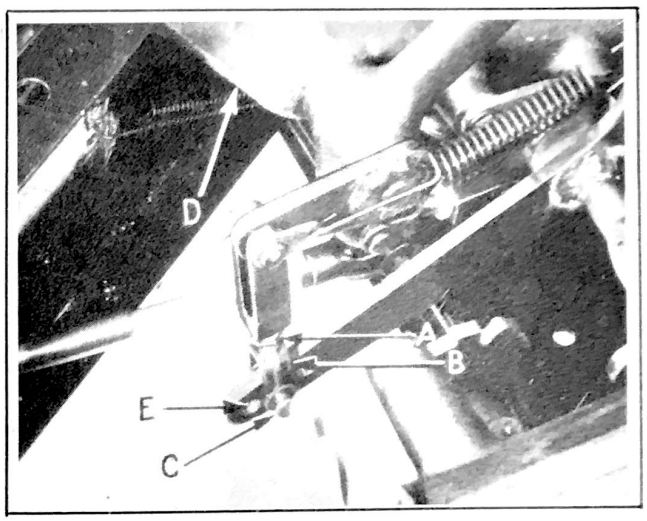

Figure 190 - Clutch Pedal Adjustment

Turn the engine slowly (about 1/3 of a revolution) until the star on the flywheel is in line with the pointer on the timing inspection hole. This brings the drain hole to the bottom and permits the Hudsonite lubricant to drain out.

Turn the engine until the drain hole is in the timing opening and insert 1/3 of a pint of Hudsonite Clutch Compound using J 485 gun.

The measuring cup J 486 is calibrated and should be used for measuring the clutch compound unless the "one shot" one third pint can is being used.

Refill Set J 441 includes wrenches and filler equipment to handle clutch service.

The complete kit or any individual item can be purchased.

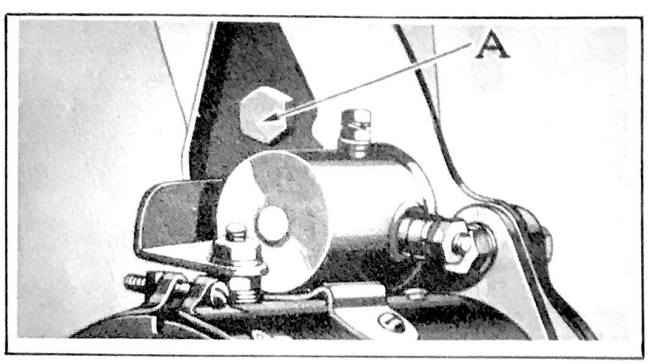

Figure 191 - Clutch Lubrication

CLUTCH REMOVING

Remove accelerator pedal by taking out cotter pins in the clevis pins of anchor bracket and bellcrank link.

Pull the rubber steering column hole cover up out of the way.

Remove the screws holding the kick pad to the dash and remove the six floor mat trim clips. Remove floor mat.

Remove the front seat cushion.

Remove the transmission opening floor cover bolts. Remove cotter pins holding pedal link bellcrank to cross shaft rod. Take the floor cover off.

Remove the two propeller shaft U bolt lock nuts and the locks.

Disconnect the front universal joint.

Unhook the clutch pedal lever return spring.

Remove the two cross shaft bracket bolts.

Remove the clutch control link clevis pin.

Release clutch pedal assisting spring.

Remove the transmission handy shift control tube to transmission cover rod clevis pin.

Jack up the car and from underneath remove two flywheel guard to clutch housing screws and two engine rear mounting bolts.

Jack up rear end of engine about 1/2" off the frame.

Remove the clutch housing to transmission bolts.

Disconnect speedometer cable at transmission.

Pull transmission back and lift out.

Loosen all clutch cover to flywheel bolts slightly to release the tension of the pressure springs. Remove the bolts and lift off the clutch.

CLUTCH INSPECTION. Check the condition of corks in driving plate (1), Fig. 187. A black glaze indicates the use of an improper lubricant. The use of Hudsonite lubricant keeps the pores of the corks open and if the corks are not burned, soaking the driving plate in Hudsonite and the use of Hudsonite in the clutch after reassembly will very often clean up the cork surfaces.

Clean cork surfaces are necessary for a smooth, soft, perfectly operating clutch action.

The driving plate should run true and the springs and the spring cages should retain the hub in the disc without appreciable rotary or sidewise lost motion.

The hub splines must be free of burrs to permit free movement on the spline shaft.

Pressure plate (2), Fig. 187, should be free of scores or blued spots. Blued spots indicate that the clutch has been operated at an excessive temperature in which case the engaging springs should be replaced as they have probably lost their tension.

Blued spots may mean that the pressure plate is warped. It is necessary to remove the pressure plate from the clutch to check for warpage.

Do not confuse gummed oil spots with blued spots. The gummed oil has a similar bluish appearance but gummed oil is easily scraped off.

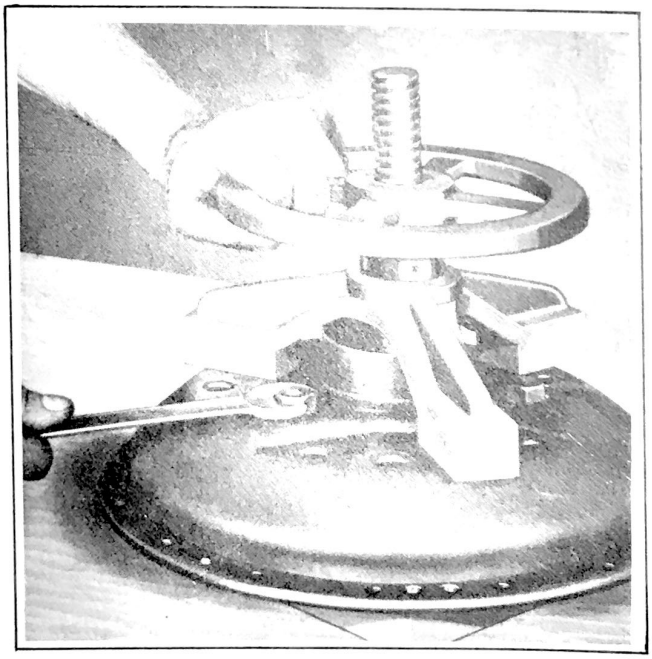

Figure 192 - Disassembling Clutch Using Tool J-298-H

CLUTCH DISASSEMBLING. Look for the punch marks near the outer edge of the pressure plate and a corresponding mark near it on the turn of the cover flange. These marks indicate the position of the parts when the assembly was balanced at the factory and the unit should be reassembled with the marks together to maintain the original balance.

If the marks are not readily visible, make them so by using a prick punch.

Place the clutch assembly in the clutch fixture J 298-H, Fig. 192, and clamp it tightly with the hand wheel. Remove the three nuts (6), Fig. 187, from the back of the cover and release the hand wheel. The cover can then be removed, exposing the springs (7) clutch fingers (3) and finger retainers (5).

CLUTCH PRESSURE PLATE WARPAGE. Use a surface plate if possible and if not lay the pressure plate face to face with a new plate and check by inserting a feeler gauge between the plates.

If a .010" feeler gauge can be inserted at any point between the plates there is sufficient warpage to make it advisable to replace the plate.

CLUTCH ENGAGING SPRINGS will last indefinitely and retain their original strength unless they become excessively hot or unusual usage has been given them.

The engaging springs (7), Fig. 187, for Models 10, 11, 18 when compressed to 1-3/4" have a weight of 155 lbs. plus or minus 5 lbs. The models 12, 14, 15, 17 springs when compressed to 1-5/8" have a weight of 135 lbs. plus or minus 5 lbs.

The inner engaging springs (8), Fig. 187, when compressed to 1-5/8" have a weight of 80 lbs. plus or minus 5 lbs.

CLUTCH SPRING TESTER TOOL, NO. U15. If there is any doubt about replacement and it is apparent that the clutch has had hard usage replace the springs using Hudson part No.

45148 engaging spring for 9" clutch.
45149 engaging spring for 10" clutch.
155224 inner engaging spring for all clutches using an inner spring.

These Genuine Hudson Clutch Springs are:

Pre-set	Square at ends
Tested for strength	Deflect true to their center line.

CLUTCH THROWOUT FINGERS. Check for straightness and wear at the points where they rest against the retainer or throwout bearing.

The finger retainer washers should be replaced if not in good condition.

CLUTCH ASSEMBLING. Using clutch fixture J 298-H, place the pressure plate (2), Fig. 187, with the friction face down. Insert springs (7) and inner springs (8) if used, throwout fingers (3) finger retainers (5) and retainer washers in place.

Put cover in place making certain that the punch mark on pressure plate lines up with punch mark on cover.

Put the hand wheel of the fixture in place and guide throwout finger retainers into the holes in the cover as the wheel is being run down on the screw. Place nuts (6) on three throwout finger retainers. Draw down tightly. Remove head wheel from fixture and remove clutch assembly from the fixture.

Clutch finger fulcrum nuts should be tightened with a torsion wrench to 45 foot pounds.

CLUTCH PILOT BEARING. Check flywheel face for smoothness and hold on nuts for tightness.

Pilot bearing should run smoothly and freely. If necessary, replace it using J 877 clutch pilot bearing remover.

The end of the puller is passed thru the inner race of the bearing and then expanded by a thumbscrew so that it hooks behind the race.

CLUTCH ASSEMBLING IN CHASSIS. Use a new clutch cover gasket and shellac it in place on the front face of the clutch cover flange.

Before installing the transmission, wrap one strand of soft wire around the clutch throwout bearing leather seal to prevent it from curling over when placing the transmission. Twist the wire and place the long ends upward thru the clutch housing. Twist the wire so that it comes off the oil seal after the transmission is in place.

The transmission must be lowered into position carefully and over the mainshaft drive gear so as to engage the splines in the clutch driving disc.

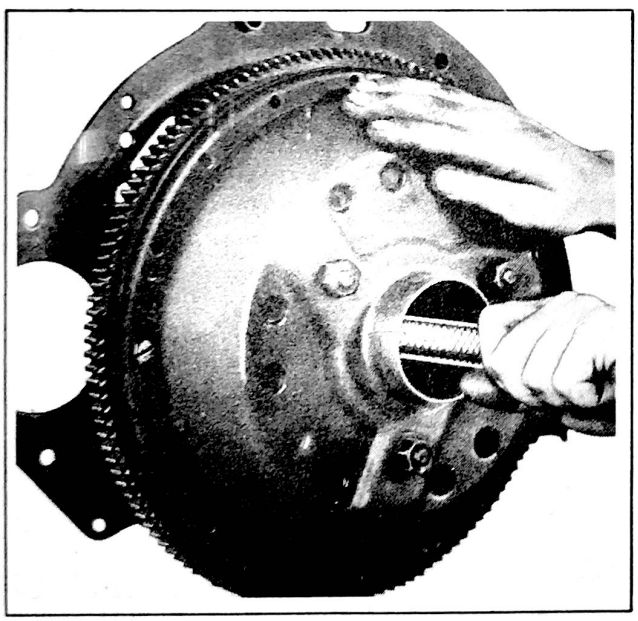

Figure 193 - Assembly of Clutch to Flywheel Using Clutch Aligning Arbor J-44-G

Use the clutch aligning arbor J 449, Fig. 193, placing it through the hubs of the clutch cover and drive plate and entering into the pilot bearing. Push the clutch assembly into place against the flywheel and then secure with the capscrews. Keep aligning arbor still in position so as to keep the drive plate centered. This will permit easy installation of the transmission.

Tighten the capscrews gradually drawing down opposite screws instead of in rotation so that a good gasket seal is insured.

Clutch cover to flywheel bolts should be tightened with a torsion wrench to 22 foot pounds.

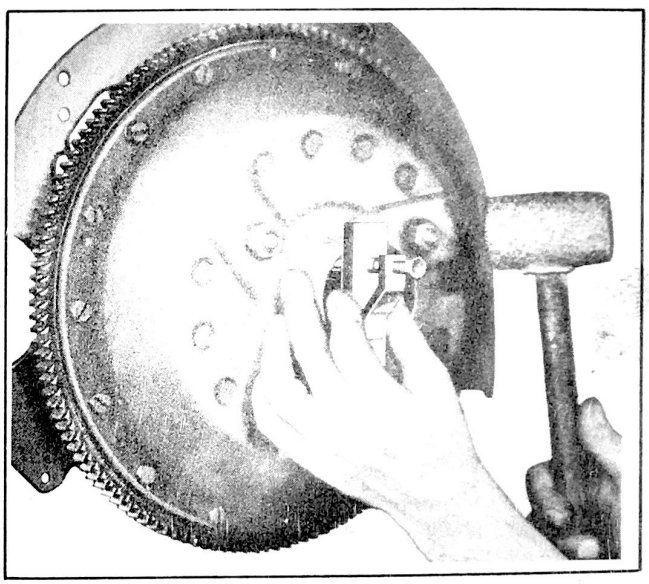

Figure 194 - Clutch Finger Alignment Using Clutch Finger Adjusting Gauge J-774

CLUTCH FINGER ALIGNMENT. The three clutch fingers (3) must be in alignment to insure all of them contacting the throwout bearing. Improper alignment causes clutch finger rattle at idle speeds and uneven movement of the pressure plate which causes grabbing and chattering of the clutch.

Align the fingers by placing bar of the clutch finger adjusting gauge (J 774), Fig. 194, against the rear of the clutch cover hub so that the pin is resting on one of the fingers.

Turn down the thumbscrew until it contacts the pin. Move to the other two fingers, turning the thumbscrew down if

necessary, to take up clearance with the gauge pin. The final adjustment of the gauge will give the level of the lowest finger.

Swing the gauge around to one of the high fingers and strike the end of the finger retainer with a soft hammer until the gauge bar rests squarely on the cover hub.

Swing the gauge to the other high finger and repeat the operation.

Swing back to the low finger to check. The gauge should now rest squarely on the hub over all fingers. Clearance between the thumbscrew and pin of the gauge to be less than .005". Check this clearance at each finger with a feeler gauge.

CLUTCH COLLAR WITH THROWOUT BEARING AND OIL SEAL. The clutch throwout bearing oil seal is pressed into the clutch collar and the throwout bearing is also pressed onto the collar.

To replace a clutch throwout bearing oil seal it is necessary to first press off the throwout bearing and then pry loose and pull off the oil seal.

Care must be used in pressing a new oil seal onto the throwout collar. It must be pressed on with a steady pressure at the inner edge. If the pressure is applied on the outer stamping it will be distorted and pushed into the leather seal so that the leather may become loose in the inner stamping or torn.

An oil seal that has the leather loose in the inner stamping will spin with the clutch cover and carry the outer stamping with it and cause a rubbing sound between the two stampings of the seal.

This noise could be mistaken for a noisy throwout bearing.

Whenever the clutch throwout collar is disassembled from the clutch the oil seal outer stamping should be checked to see that it is tight in the inner stamping. The check is made by turning the outer seal with one of your fingers. You can feel whether it is tight or not.

The throwout bearing should be clean and run smoothly. It should be pressed on the collar with a continuous pressure with the force applied through the ball races and balls. If the bearing is driven on with a hammer the races may be marked by the balls causing the bearing to become noisy.

An arbor press should be used to press on the oil seal and the throwout bearing. The arbor should be square and large enough in diameter to cover the entire surface of the bearing on which the clutch fingers normally rest. During the pressing of the bearing onto the collar it should be turned so that the balls move in the races as in that way the load is uniformly divided. After installing the bearing it should be lubricated with a good quality of viscous grease through the pressure fitting on the right side of the clutch bell housing.

Lubricate every 1,000 miles.

CLUTCH DRIVING KIT (FOR 9" CLUTCH). Whenever a clutch repair is undertaken that requires a driving plate assembly it is also necessary to install a cover gasket, throwout bearing oil seal and throwout bearing grease retainer.

Such a repair job will also require the refilling of the clutch with lubricant.

A service kit Part 161377 containing these very necessary parts is available and contains:

1 Clutch Driving Plate Assembly - 9".
1 Clutch Cover Gasket.
1 Throwout Bearing Oil Seal.
1 Clutch Throwout Bearing Grease Retainer.
1 Can containing 1/3 Pint of Genuine HUDSONITE Clutch Lubricant.

This kit can be used on Hudson cars from 1934 to 1941 inclusive, having the 9" clutch.

CLUTCH VACUUM CONTROL

Automatic control of the clutch is by means of engine vacuum which automatically releases and engages the clutch without the need of manually depressing the clutch pedal.

Clutch vacuum control is optional equipment and can be installed by the factory or in the field by a dealer.

The engine vacuum in the intake manifold operates valves inside of a power cylinder and these valves control a piston in the power cylinder, which is connected to the clutch operating lever and also to the accelerator pedal.

CLUTCH VACUUM CONTROL OPERATION starts from a knob located in the center of the instrument panel on the accessory switch

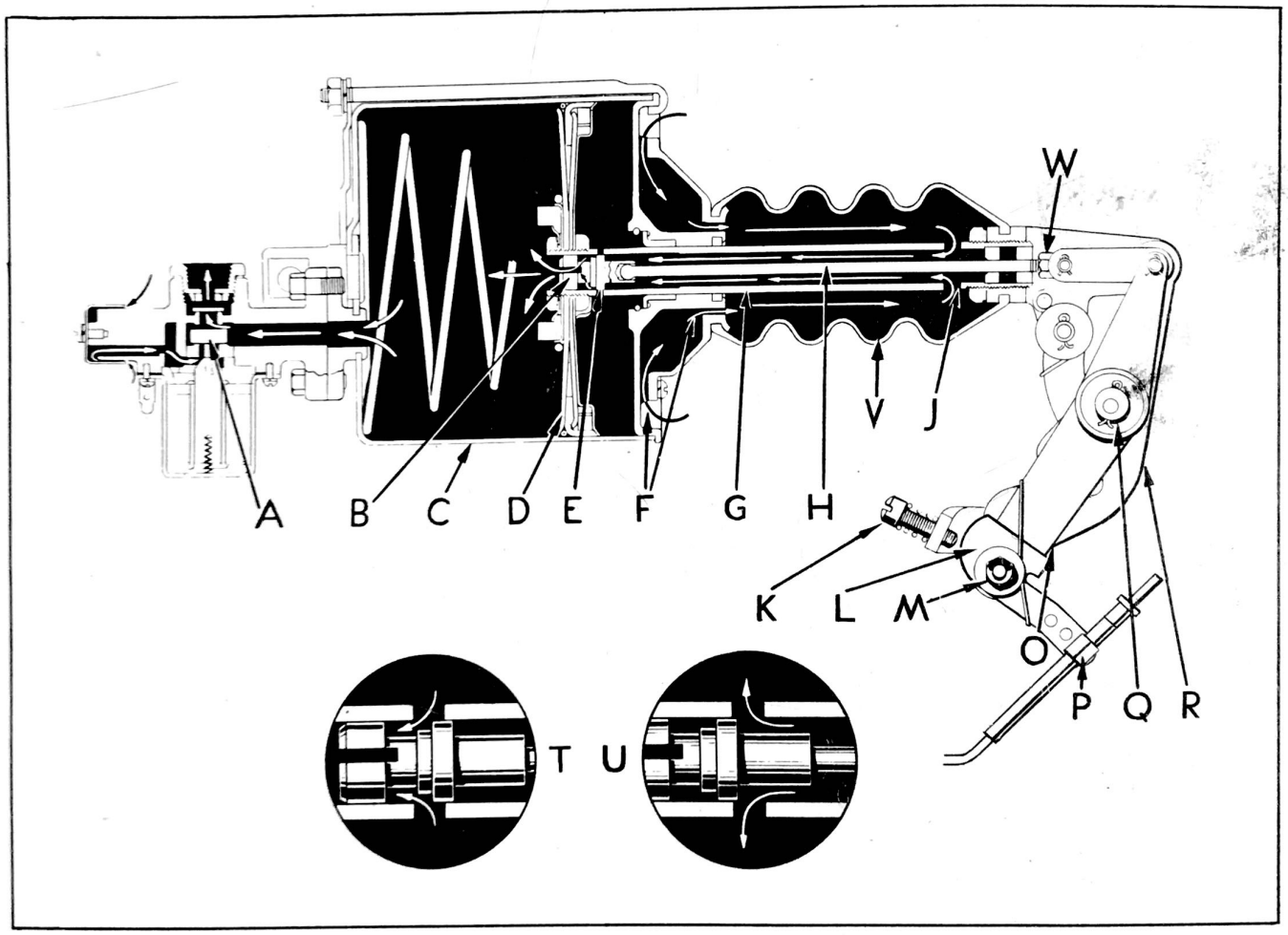

Figure 195 - Automatic Clutch Cylinder and Valves

A. Solenoid valve
B. Valve plunger
C. Vacuum power cylinder
D. Vacuum piston
E. Piston rod air passages
F. Air cleaner passage
G. Piston rod
H. Valve rod
J. Piston rod air passage
K. Cushion point stop screw
L. Valve lever cam
M. Valve lever cam pivot
N. Control valve lever cam spring
O. Valve lever
P. Accelerator linkage and guide block
Q. Valve lever pivot
R. Operating bell crank
S. Control valve lever cam threaded sleeve rod
Diagram T shows valve in vacuum position
Diagram U shows valve in atmospheric position

mounting bracket. Pushing the button in allows vacuum control operation. Pulling the button out allows conventional clutch operation without vacuum control.

Vacuum control can only operate when the engine is running thereby giving intake manifold vacuum.

The clutch pedal must be depressed manually (by the driver's foot) when first starting the car.

CLUTCH VACUUM CONTROL DISENGAGEMENT. When the ignition switch is on, the electric circuit thru the vacuum control solenoid is completed and the solenoid valve (A), Fig. 195, is opened. This permits a direct passage between the intake manifold and the forward end of the power cylinder (C).

The engine is started and vacuum is created within the power cylinder on the forward side of the piston (D). This action completely disengages the clutch and holds it disengaged.

What took place is this: vacuum drew the valve plunger (B) forward, thereby uncovering the ports (E) allowing air to enter the rearward end of the cylinder thru these ports (E) along valve rod (H), piston rod ports (J) and air cleaner ports (F).

CLUTCH VACUUM CONTROL ENGAGEMENT is caused by depressing (stepping on) the accelerator pedal. This movement is transmitted directly to the valve lever cam (L) at the lower end of the valve lever (O). This valve lever is connected to the bell crank (R) at a point about two thirds of the way up from the bottom. This point (Q) serves as a fulcrum point.

As the accelerator pedal is depressed and the valve lever cam (L) moves forward, the upper end of the valve lever (O) and the attached valve rod (H) moves rearward. As the valve rod is moved rearward the piston rod ports (E) are uncovered to connect the two sides of the piston (D) and the vacuum within the forward end of the cylinder begins to withdraw the air from the rearward side of the piston. This action equalizes the pressure on the two sides of the piston and the result is a tendency to suspend the piston in vacuum.

As pressure is reduced on the rear side of the piston it starts to move rearward on its engaging stroke, and as the piston moves rearward the piston rod ports (E) try to overtake the valve plunger (B) and seal the vacuum ports. This follow-up action takes place during the entire engaging stroke. The piston rod movement stops as soon as the valve (B) comes to a top position over the ports (E). In this position the ports are sealed so that air can neither enter or escape from the rearward side of the piston.

CLUTCH VACUUM CONTROL VALVE ACTION. In order that the clutch may be brought up to its first engaging (cushion) point with the least possible delay, the piston rod ports (E) are uncovered to a greater extent before the cushion or engaging point than they are after this point has been reached.

This is accomplished by the use of a spring loaded valve lever cam (L) at the lower end of the valve lever (O).

When the cushion point is reached the rapid movement of the valve ceases. This movement takes up the clearance between the valve lever cam (L) and the cushion point stop screw (K).

When the valve lever cam comes in contact with the cushion point stop screw, any further movement of the valve lever (O) takes place as the valve lever cam is rotated about its center (M) and the distance between the cam center and stop screw is reduced.

A finely regulated movement of the valve in order to cushion the clutch engagement is provided by this cam action.

When the cushion point is reached and the clutch begins its initial engagement, the throttle also begins to open. The throttle rod having taken up all of its lost motion which was provided for clearance. The initial clutch engagement havbeen made, the valve lever cam angle changes quickly allowing the clutch to complete its engagement quite rapidly.

CLUTCH VACUUM CONTROL COMPENSATOR lever is to give two rates of clutch engagement, each being automatic. These are necessary because of the cork inserts becoming covered with clutch lubricant after the engine has stopped.

Attached to the bell crank (C), Fig. 196, is a two position compensation lever (B) which turns the eccentric pivot (D), changing the relation of the valve lever (A) with respect to its pivot point on the bell crank (C).

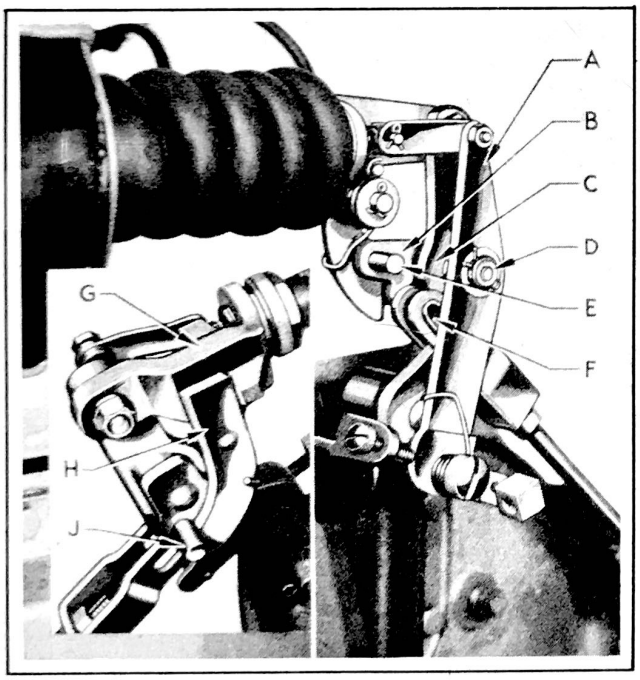

Figure 196 - Clutch Compensator

When first starting the car, the clutch pedal is depressed manually (by the driver's foot) and the action that takes place is--the end of the bell crank yoke (F) strikes the pin (E) and swings the lever (B) both forward and upward, see Fig. 196.

This moves the center of the valve lever pivot forward and permits the clutch to engage farther, to compensate for the cork inserts being covered with oil.

Normal driving position of the compensator lever follows and as soon as the clutch is automatically engaged and after the first shift into high gear, the trip lever (H) which is mounted on the piston rod end (G) will engage the pin (J) and the compensator lever will be rotated back to a position for normal driving, see insert Fig. 196.

The compensator lever must be in a normal driving position before making any automatic clutch adjustments.

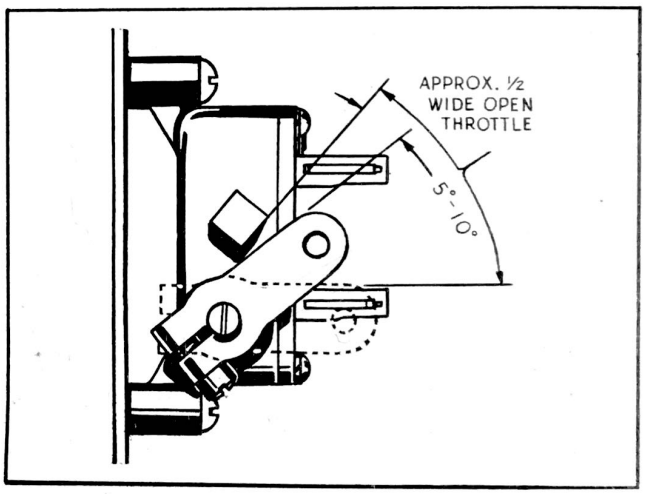

Figure 197 - Accelerator Switch

CLUTCH VACUUM CONTROL ACCELERATOR SWITCH makes it possible to start with a wide open throttle or to suddenly open wide the throttle for rapid acceleration. A positive and a rapid clutch engagement is desirable in such cases.

Breaking the ground circuit to the solenoid valve makes possible this positive, rapid clutch engagement. The vacuum port is allowed to close and air is permitted to enter the forward end of the power cylinder thru the atmospheric ports of the valve body.

The accelerator switch is mounted on the engine water jacket cover stud and is operated by the throttle linkage. It

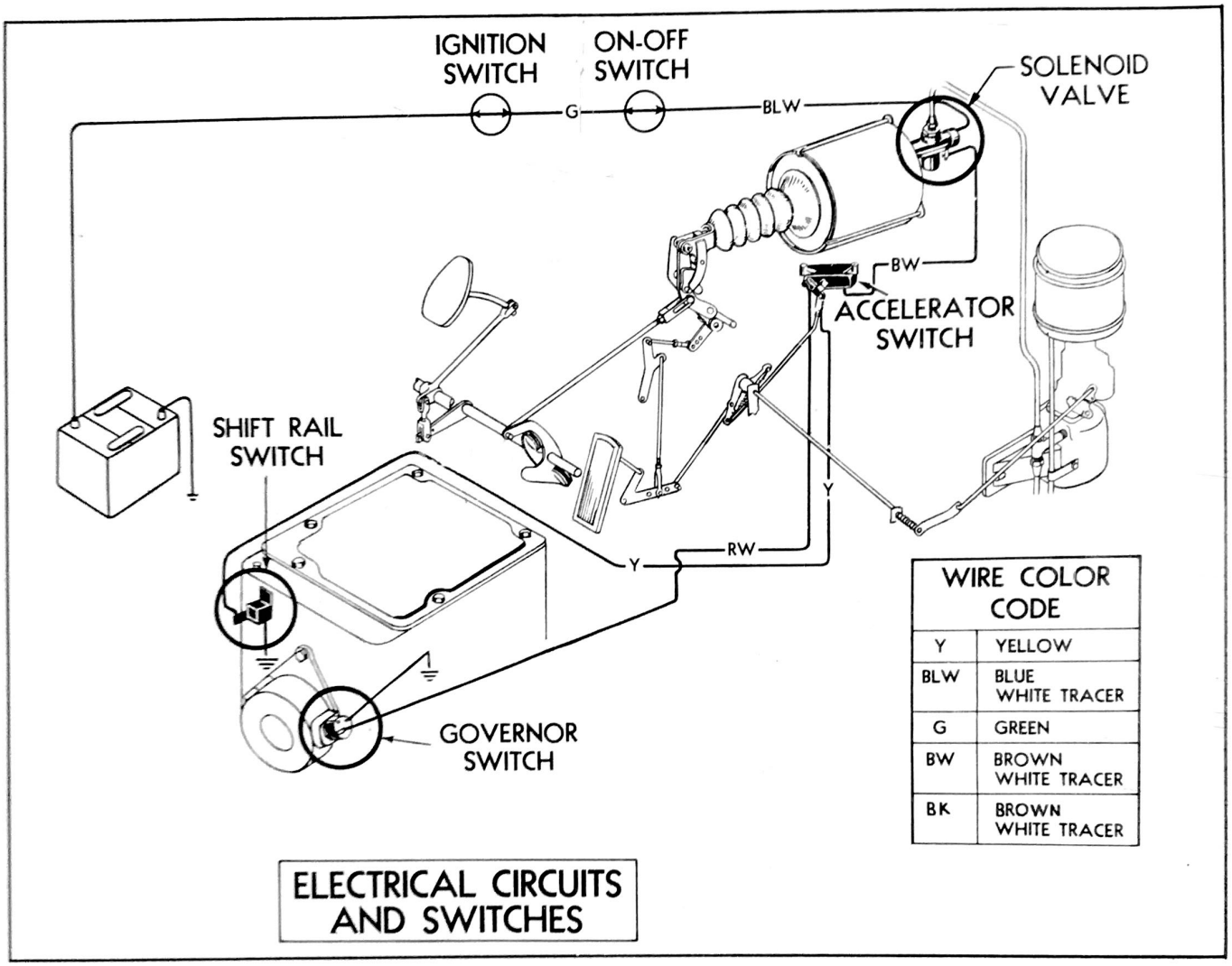

Figure 198 - Electrical Circuits and and Switches

controls the electrical circuit making possible the positive and rapid clutch engagement for rapid acceleration.

The accelerator switch, Fig. 197, contains two sets of breaker points both of which are operated from the same lever. When this lever is in the closed throttle position, both sets of breaker points are closed and there is a circuit to the ground thru the solenoid; either thru the (RW) wire to the governor or thru the (Y) wire to the high gear shift rail switch and selector switch, see Fig. 198. The governor control operates when the car is in high gear and is disconnected when the throttle is opened at from 5 degrees to 10 degrees of travel of the switch lever. The circuit thru the (RW) wire is broken.

The shift rail switch and selector ground finger controls are not operating in reverse, first and second gears when the throttle is approximately one half open. The second or (Y) circuit is broken.

CLUTCH VACUUM CONTROL PISTON ROD GUARD REPLACING. Remove valve lever by removing nut at eccentric pivot and cotter pin at valve rod trunnion. Fig. 196.

Remove piston rod end to bell crank bolt.

Remove piston rod guard from groove in piston rod end.

Hold piston rod end with a drift in the bell crank bolt hole and loosen the locknut (W, Fig. 200) against rod end. Remove piston rod end.

Replace piston rod guard and reassemble.

Adjust piston rod end to give a length of 13-11/16" from center of vacuum cylinder mounting hole to center of hole in piston rod end when fully extended.

Replace valve lever and readjust cushion point stop screw (see Final Adjustment Page 169.

CLUTCH VACUUM CONTROL POWER CYLINDER TENSION SPRING. A part of the weight of the rear end of the power cylinder is supported by a spring (see M, Fig. 200).

CLUTCH VACUUM CONTROL ADJUSTMENTS should not be started until the engine has been properly tuned and thoroughly warmed up so that it idles smoothly.

The engine should show a steady vacuum gauge reading of 18 to 21 inches of mercury at 7 to 9 M.P.H.

The car should be driven long enough to bring the clutch units to a normal operating temperature.

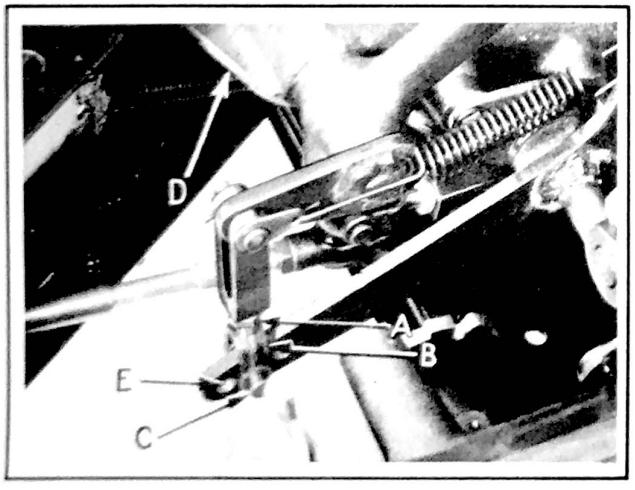

Figure 199 - Clutch Pedal Adjustment

CLUTCH PEDAL ADJUSTING is by removing clevis pin (C), Fig. 199, loosening nut (A) and turning yoke (B) so that the center of the pedal shank clamp bolt is 1-1/2" from the toe board when the clutch is fully engaged.

CLUTCH VACUUM CONTROL LINKAGE should work freely and without any binding. The accelerator switch arm (A), Fig. 200, must rest securely against its stop on the side of the switch by the action of the accelerator pedal spring (B) acting through the accelerator switch operating rod (C).

The accelerator pedal spring (B, Fig. 200) returns the accelerator pedal link bell crank to its stop position. Install the accelerator switch on its bracket by removing the rear lower bolt from the water jacket cover and using it for attaching the bracket.

Install the accelerator switch to bell crank rod so that the clevis pin at the switch end just slips into place when the switch lever is against its stop.

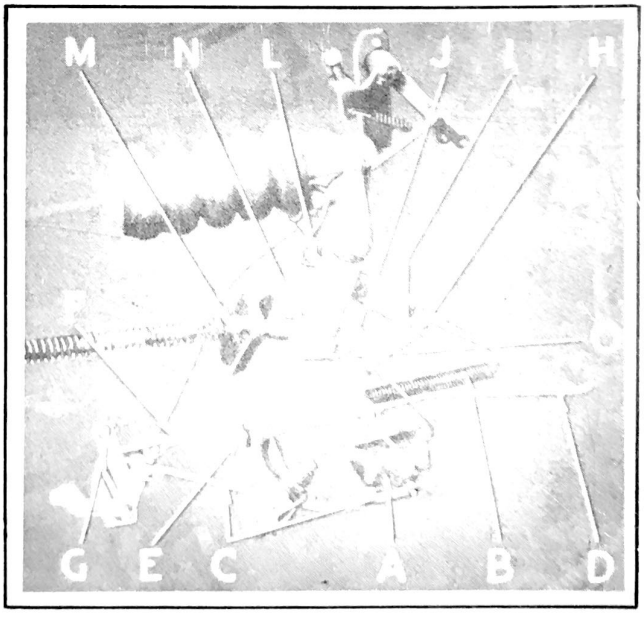

Figure 200 - Linkage Adjustments

The threaded sleeve valve lever cam operating rod (F) must be in the hole in the accelerator pedal link bell crank

which is suitable for the car model. Threaded sleeve (F) should be adjusted at nut (H) to obtain 1-5/32" from end of threaded sleeve to end of rod on Models 14, 15, 17, All other models use an 11/16" dimension at this point.

The engine should be idling and the vacuum clutch control "ON".

This is a preliminary adjustment to be followed by "Piston Travel Adjustment".

CLUTCH VACUUM CONTROL BELL CRANK YOKE ADJUSTMENT. All play should be removed between the power cylinder piston and the clutch operating lever. All pressure must also be removed from the clutch throwout bearing while the clutch is engaged.

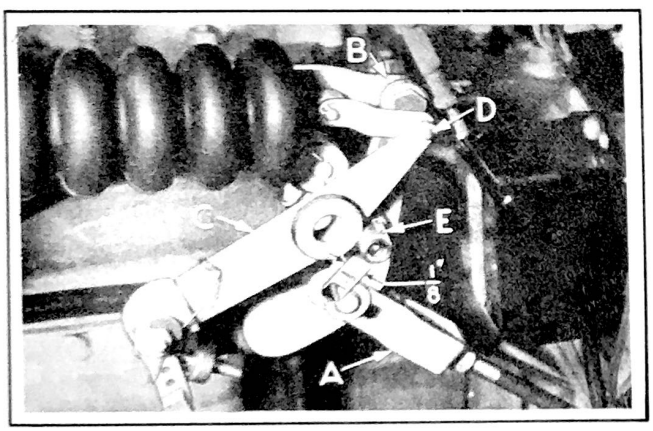

Figure 201 - Bell Crank Yoke Adjustments

With the engine stopped and the power cylinder piston rod (B), Fig. 201, in its extreme rear position, remove the valve lever assembly (C). This is done by removing the nut at (E) and the cotter pin (D) at the valve rod to valve lever link. This renders the bell crank operating rod yoke (A) accessible for adjustment. The distance between the front edge of the clevis pin and the front end of the slot in the yoke should be 1/8".

CLUTCH VACUUM CONTROL PISTON TRAVEL ADJUSTMENT. With guide block (A), Fig. 202, in the rear hole of cam lever (B), adjust valve lever cam threaded sleeve (C) to give maximum disengagement travel to the piston. With the engine running

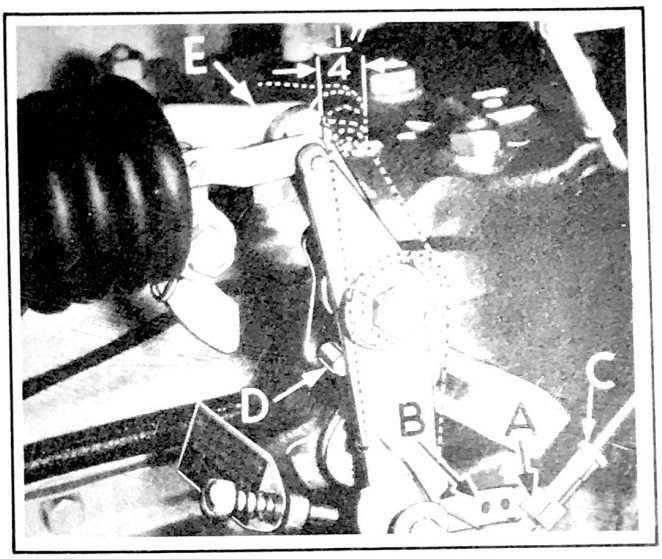

Figure 202 - Piston Travel Adjustment

and the clutch disengaged and compensator pin (D) in its extreme rear position, screw the threaded sleeve (C) toward the dash until the piston rod (E) just reaches its extreme forward position. Screw threaded sleeve (C) away from the dash until the piston moves to the rear 1/4 of an inch. This gives the proper adjustment for the forward travel of the piston.

CLUTCH VACUUM CONTROL CUSHION POINT. The start of any adjustment of the clutch vacuum control is the determining of the cushion point. This adjustment is extremely important.

Block the wheels securely and start the engine. Do not set the brakes. Accelerate the engine several times while manually engaging and disengaging the clutch. This is intended to wipe off or dry the clutch disc.

Make certain the carburetor is not on fast idle and back out accelerator cross shaft stop screw to give 1/16" clearance at R, Fig. 204.

Swing the compensator (A, Fig. 203), to the rear and turn the cushion point stop screw (B) clockwise (in) until it meets the cam (C). Shift transmission gears into low and hold cam (C) against the stop screw (B) by pressing forward at point (D).

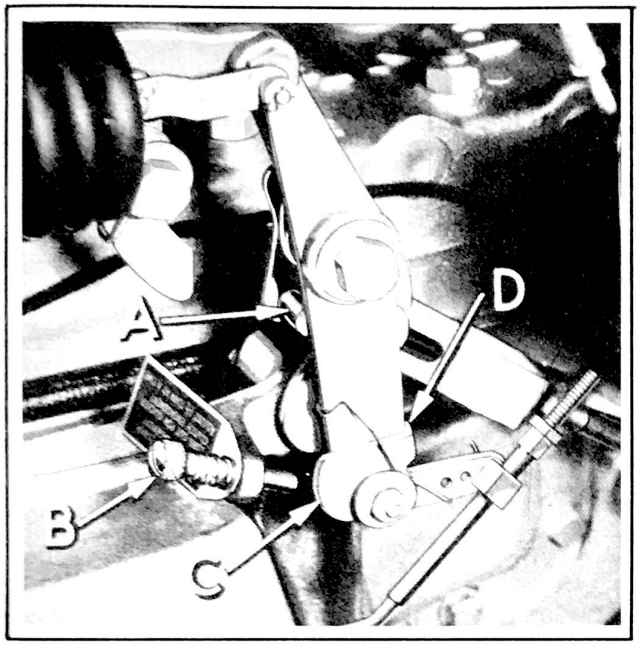

Figure 203 - Finding Cushion Point

At the same time slowly turn stop screw (B) counterclockwise until the clutch drag slows the engine noticeably.

This is the cushion point or the point where the clutch disc begins to drag against the flywheel.

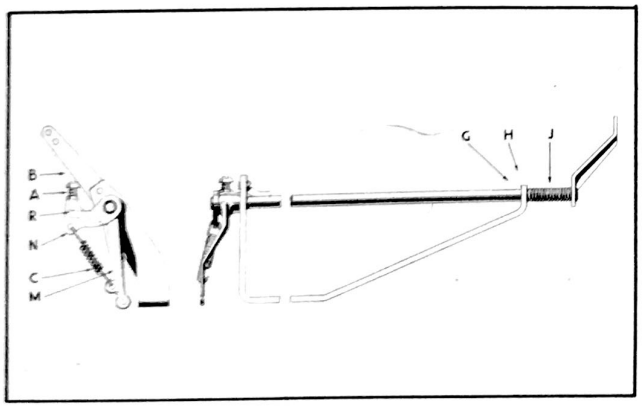

Figure 204 - Throttle Rod Clevis Adjustment

CLUTCH VACUUM CONTROL THROTTLE ROD CLEVIS ADJUSTING is at point (B), Fig. 204, as follows:

Models 10, 18 ..... Hole No. .....
Models 11, 12 ..... Hole No. .....
Models 14, 15, 17 .... Hole No. .....

With transmission gears still in low and with engine running, move the bell crank lever, (Fig. 204) until the cam (N, Fig. 200) just contacts the cushion point screw.

Holding the throttle mechanism at this point (bell crank), turn in the accelerator cross shaft stop screw (Fig. 204) until the engine just starts to speed up (throttle begins to open).

Recheck this adjustment after removing the carburetor governor, or any time the carburetor is removed.

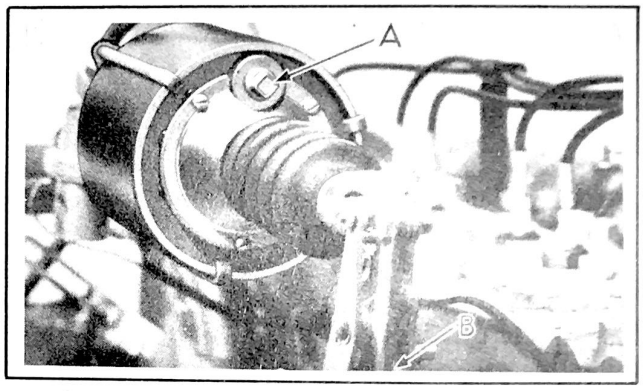

Figure 205 - Lubrication Power Cylinder

CLUTCH VACUUM CONTROL PISTON LUBRICATION. In order that the piston seal be kept soft and pliable and assure a seal against the cylinder wall, one ounce of HUDSON SHOCK ABSORBER FLUID should be poured into the cylinder every 10,000 miles.

Remove the pipe plug (A), Fig. 205, in the cylinder end and inject lubricant. Remove the piston rod end to bell crank bolt and the valve rod to lever link. Rotate the piston with an in and out motion to distribute the oil over the entire piston and oil wick.

Two or three drops of oil in the bell-crank bracket oil hole (B), Fig. 205, every 1000 miles will insure free operation.

CLUTCH VACUUM CONTROL FINAL ADJUSTMENT. Shift transmission into second gear and gradually depress accelerator pedal with the engine running.

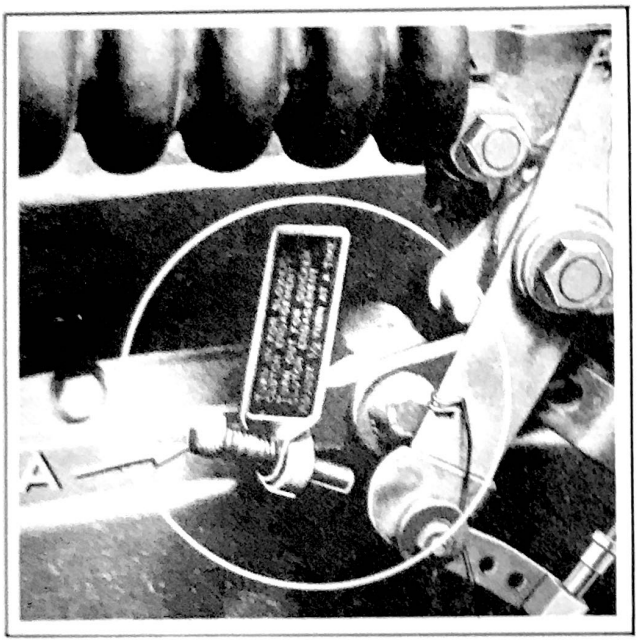

Figure 206 - Final Adjustment

As soon as the throttle starts opening, the clutch should engage. The cushion point stop screw (A), Fig. 206, and throttle should be so adjusted that the car begins to move (slightly) upon the first increase of engine speed.

If the clutch engagement is slow and at the same time the engine speed is too great (slightly racing), then turn the cushion point stop screw (A) outward (counterclockwise). If the clutch engagement is too fast, causing the engine to stall, then turn the screw inward (clockwise).

Do not turn the cushion point stop screw more than one half turn at a time.

CLUTCH VACUUM CONTROL SLOW OR ERRATIC OPERATION can be caused by -

Leaks in automatic clutch
Friction in throttle or valve linkage
Sticky solenoid plunger.

Check for piston leaks by sliding piston rod guard forward until the four circular ports are exposed in the piston rod. Start engine and let the clutch remain automatically disengaged. Place the thumb and two fingers over the port holes. Any leak in the piston seal can be felt as a suction action on the fingers at the port holes. Some suction is permissable but not very strong.

Check all gaskets, pipes and pipe fittings.

Look over the linkage for any signs of slow or sticking action.

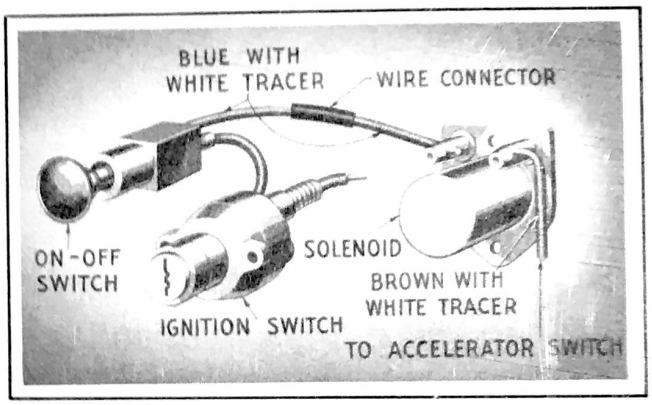

Figure 207 - Switch and Solenoid

CLUTCH VACUUM CONTROL SOLENOID VALVE TESTING. The Solenoid Valve uses the principal of an ordinary magnet and is in operation when the ignition is turned on, which causes the valve to open.

To check the Solenoid, remove the blue-white tracer wire from it and attach this terminal to clip of a test lamp. Ground the wire terminal to which the brown white tracer wire is attached. Touch prod to the solenoid terminal from which the wire was removed and note the test lamp. A bright light indicates a short circuit. No light indicates an open circuit and a faint glow indicates a normal circuit.

A simple test lamp can be made by using a No. 87-15 C.P. bulb with suitable leads and clips.

If the circuit tests normal, remove vacuum pipe, bushing and bakelite valve disc.

Insert narrow scale in opening and press lightly against the valve plunger. If plunger does not move freely from 1/16" to 3/32", check valve rubber disc and

plunger for interference. Replace fittings tightly to prevent leaks.

CLUTCH VACUUM CONTROL DASH OFF-ON SWITCH AND UPPER WIRING HARNESS. If the clutch does not engage with fully closed throttle and the valve rod is in its extreme forward position, check the instrument panel off-on switch to see that it is "on" (pushed in). If it is, then connect a jumper wire from the battery cable terminal to the solenoid terminal that has the blue and white tracer wire attached. If clutch operates, then look for a poor contact or open circuit in the off-on switch or wiring from ignition switch to gas gauge to off-on switch to solenoid terminal.

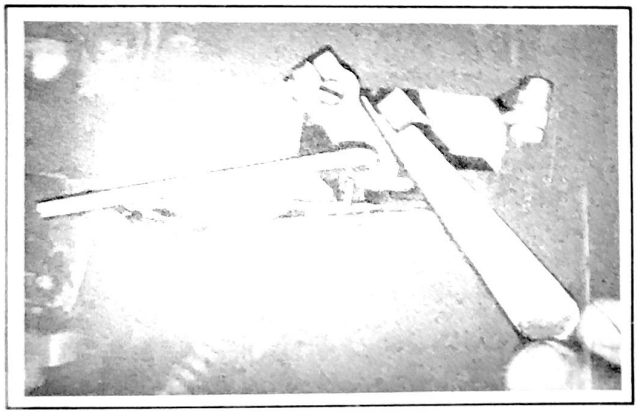

Figure 208 - Accelerator Switch Gauge

CLUTCH VACUUM CONTROL ACCELERATOR SWITCH TEST. There are two branches of the ground-circuits through the accelerator switch.

Disconnect the governor switch wire (Red-White) at accelerator switch terminal. Shift transmission into high gear; see that ignition switch and instrument panel switch are on and accelerator in idle position. Ground one test lamp lead; touch other lead to dash accelerator switch terminal from which wire (RW) was removed. With 5° step of tool J 1190 test gauge, Fig. 208, between switch lever and its stop, the test lamp should show a faint glow.

When 10° stop of gauge is inserted between switch lever and stop the lamp should go out.

Transfer test lamp lead from terminal (RW) to terminal (Y) on switch. Lamp should have a faint glow until throttle is open about half way and then go out.

Replace switch if faulty.

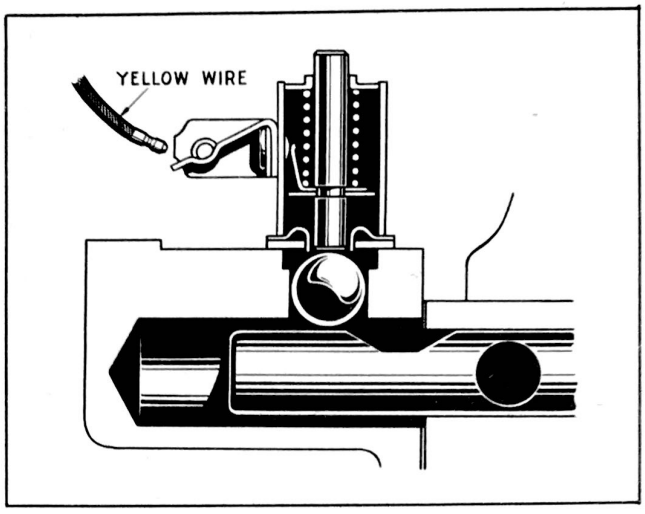

Figure 209 - Shift Rail Switch

CLUTCH VACUUM CONTROL SHIFT RAIL SWITCH. The high gear shift rail switch, Fig. 209, is at the forward end of the transmission and is to prevent the clutch being disengaged by the release of the accelerator pedal at speeds above 15 M.P.H. with transmission in high gear.

The switch is operated by the high speed shifter rail and is closed in all gear positions except high gear. The switch is opened when the transmission is shifted into high gear so that the automatic clutch is inoperative and will not disengage the clutch at speeds above 15 M.P.H.

CLUTCH VACUUM CONTROL SHIFT RAIL SWITCH TEST, FIG. 210. Disconnect Red-White wire from Governor switch. The automatic clutch should work in all gears except high, if it does not, ground shift rail switch. If operation is obtained, replace the switch or check for sticking operating ball; if not, replace or repair yellow wire between accelerator switch and shift rail switch. If automatic clutch operates in high gear, replace shift rail switch.

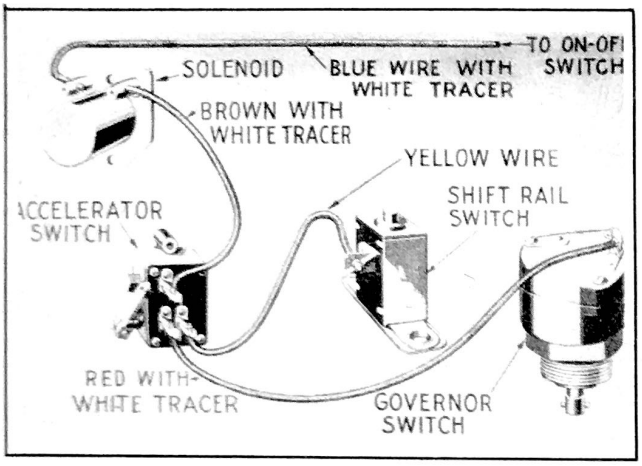

Figure 210 - Wiring Tests

CLUTCH VACUUM CONTROL WIRE HARNESS. FIG. 207. Remove the red-white wire from governor switch. Shift transmission into high gear, turn on ignition, ground one test lamp lead, connect other lead to harness connector. Test lamp should show faint glow. If lamp does not light, wiring is faulty. Repeat the test at shift rail and governor switch terminals. Recheck accelerator switch before replacing wiring harness.

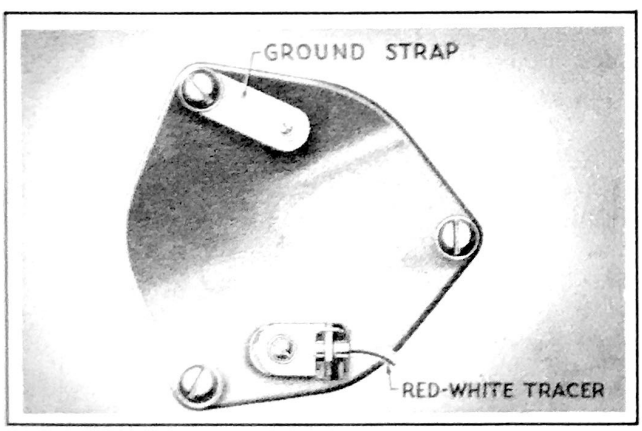

Figure 211 - Governor Switch

CLUTCH VACUUM CONTROL GOVERNOR SWITCH is closed with the car standing still or when it is moving less than 15 M.P.H. thus completing the solenoid circuit to the ground so that the Automatic clutch is operative. See Fig. 211

At speeds above 15 M.P.H. this switch is held open so that the solenoid circuit is broken and the Automatic clutch cannot operate unless the circuit is completed by the high gear shift rail switch.

The governor switch is mounted on the speedometer housing.

Check by road-testing or operating car with rear wheels blocked up so that the engine can be run with transmission in gear.

See that red-white wire is connected to the governor switch. Start engine. Rest the foot lightly on the clutch pedal in order to feel the clutch action. The automatic clutch should operate as the accelerator pedal is depressed and released. If it does not, then replace the governor switch.

Shift transmission gears into high and increase the engine speed to 25 M.P.H. Release accelerator and note when the clutch disengages.

The clutch should remain engaged until the speedometer shows 20 M.P.H. but should be disengaged before the speedometer shows 15 M.P.H. on deceleration. If clutch disengagement is not within this 15-20 M.P.H. speed range, replace the Governor switch.

CLUTCH VACUUM CONTROL INSTRUMENT PANEL SWITCH KNOB REMOVING. Loosen the set screw in the side of the knob and pull the knob off, being careful not to lose the small flat tension or anti-rattle spring inside the knob.

The switch has a sleeve (threaded inside). The mounting collar on the instrument panel mounting bracket is threaded and screws into the sleeve on the switch. Loosen by unscrewing the switch from the collar and remove the collar.

Disconnect wiring from the switch and remove. See Wiring Diagram.

CLUTCH VACUUM CONTROL KITS for installation of this unit are different for

Models 10, 11, 12, 18 than for Models 14, 15 and 17. The difference being in the cylinder mounting bracket with its stud nuts and lockwashers; bell crank bracket; and vacuum pipes at manifold; also valve end.

THE INSTALLATION KIT CONTAINS:

Cylinder assembly and tension spring.
Cylinder mounting bracket assembly.
Bell crank to coupling lever rod and play link with clevis pin; springs and attaching parts.
Bell crank bracket assembly.
Valve lever cam threaded rod assembly.
Valve lever cam adjusting screw and spring.
Threaded sleeve rod bell crank with bracket and operating rod.
Accelerator switch with accelerator lever rod.
Intake manifold vacuum connection.
Wire harness.
Vacuum pipes - manifold and valve ends.
Vacuum pipes, hose and elbow.
Instrument panel switch with mounting collar and knob.
Shift rail switch (2nd and high) with operating ball.
Governor switch and adapter.
Speedometer gear housing.

CLUTCH VACUUM CONTROL INSTALLING.

Drain cooling system.

Remove accelerator pedal, floor mat and transmission hole cover.

Remove speedometer cable and speedometer housing from transmission.

Install governor switch and speedometer cable to transmission speedometer gear housing furnished in kit.

Install shift rail switch.

Install vacuum control accelerator switch to lower rear water jacket bolt.

Install accelerator switch to bell crank rod to accelerator switch arm and to hole provided in bell crank. The accelerator pedal link bell crank and switch lever to be in their stop positions. See Fig. 200.

Install cylinder mounting bracket to 1st and 2nd studs from front of cylinder block on left side on 6 cylinder cars and to the 3rd and 4th studs from the front of cylinder block on left side on 8 cylinder cars.

Install bell crank bracket to second and third water jacket cover studs from rear of jacket and at the top and to the second from the rear at the bottom of the water jacket cover.

Mount front of power unit assembly to cylinder mounting bracket and fasten with bolt, nut and lock nut.

Mount rear of power unit assembly to bell crank bracket and secure with spring washer, flat washer and cotter pin.

Install large elbow to solenoid assembly with opening pointing towards rear or dash of car.

Install vacuum pipe to elbow and carry across engine.

Remove plug in intake manifold located towards the front of the car and directly below the heat deflector.

Install brass vacuum pipe adapter to hole in manifold.

Install vacuum pipe to adapter.

Install spring in short section of rubber hose and connect ends of two vacuum lines.

Install valve lever cam threaded sleeve red from the hole in accelerator pedal link bell crank which is suitable for the car model, to square block on the valve lever cam arm. Make Piston Travel Adjustment.

Install instrument panel switch on the accessory bracket in center of instrument panel.

Install wiring harness as follows:

A. Lead blue wire with white tracer inside of dash compartment through main cable hole in dash and connect to instrument panel switch, see Wiring Diagram.

B. Connect brown wire with white tracer, red wire with white tracer and yellow wire to dash switch according to markings on the switch.

C. Carry blue wire with white tracer and brown wire with white tracer along cylinder block to solenoid at front of power cylinder and connect brown wire with white tracer to solenoid connection towards the motor and blue wire with white tracer to solenoid connection towards the fender.

D. Carry red wire with white tracer, see Wiring Diagram, and yellow wire down dash and over clutch housing and connect yellow wire to shift rail switch and red wire with white tracer to the governor.

Replace transmission hole cover, floor mat and accelerator pedal.

Connect accelerator cross shaft operating rod to the accelerator pedal, see Fig. 200. Adjust as given farther on in the installation instructions.

Check clutch pedal adjustment. (Fig. 199)

Refill cooling system.

Adjust bell crank to coupling lever rod play link by removing cotter key, flat washer and clevis pin spring from clevis pin at (E), Fig. 201, and pin (D) which retains valve lever (C) to bell crank and adjust play link (A) to obtain clearance between front of clevis pin and front end of slot in play link of 1/8". Engine must not be running and piston rod (B) must be in extreme rearward position.

Replace valve lever on clevis pin and replace spring, washer and cotter key.

Install cylinder tension spring connecting to front of cylinder and to bell crank bracket.

Adjust linkage for proper operation. All automatic control and throttle linkages must work free and without binding. The accelerator switch arm (A), Fig. 200, must rest securely against its stop on side of switch by action of the accelerator pedal spring (B) acting through the accelerator switch operating rod (C).

The accelerator pedal spring (B, Fig. 200) returns the accelerator pedal link bell crank to its stop position. Install the accelerator switch on its bracket by removing the rear lower bolt from the water jacket cover and using it for attaching the bracket.

Install the accelerator switch to bell crank rod so that the clevis pin at the switch end just slips into place when the switch lever is against its stop.

Threaded sleeve valve lever cam operating rod (F) must be in the hole in the accelerator pedal link bell crank which is suitable for the car model. Adjust rod (F) to give 1-5/32" from end of threaded sleeve to end of rod on Models 14, 15, 17. All other models use an 11/16" dimension at this point.

The engine should be idling and the vacuum clutch control "ON".

This is a preliminary adjustment to be followed by "Piston Travel Adjustment".

Piston travel adjustment must be made with guide block (A), Fig. 202, in rear hole of cam lever (B), adjust valve lever cam threaded sleeve (C) to give maximum disengagement travel to the piston. With engine running, clutch disengaged, and compensator pin (D) in its extreme rearward position, screw threaded sleeve (C) towards the dash until piston rod (E) just reaches its extreme forward position. Then screw threaded sleeve (C) away from

dash until piston moves rearward 1/4". This gives the proper adjustment for forward travel of the piston.

In determining the cushion point, block the wheels securely and start the engine. Accelerate engine and engage and disengage the clutch several times. This action tends to dry the clutch disc. Make certain the carburetor is not on fast idle and back out accelerator cross shaft stop screw to give 1/16" clearance at R, Fig. 204. Swing the compensator pin (A), Fig. 203, rearward and turn cushion point stop screw (B) clockwise (in) until it meets the cam (C). Then with transmission in low gear, hold the cam (C) against stop screw (B) by pressing forward at point (D) and at the same time slowly turn stop screw (B) counterclockwise (out) until the clutch drag slows the engine noticeably.

Throttle Rod Clevis Adjustment. The throttle rod must be adjusted at point (B), Fig. 204, as follows:-

Models 10, 18 ..... Hole No. .....
Models 11, 12 ..... Hole No. .....
Models 14, 15, 17 .... Hole No. .....

With transmission gears still in low and with engine running, move the bell crank lever, (Fig. 204) until the cam (N, Fig. 200) just contacts the cushion point screw.

Holding the throttle mechanism at this point (bell crank), turn in the accelerator cross shaft stop screw until the engine just starts to speed up (throttle begins to open).

Final check should be made by shifting transmission into second gear and gradually depressing accelerator pedal with engine running. The cushion point stop screw and throttle should be so arranged that the car begins to move slowly forward upon initial opening of the throttle. If the clutch engagement is slow, accompanied by excessive motor speed, turn the cushion point stop screw counterclockwise (out); if too fast, thereby stalling engine, turn screw clockwise (in). Do not turn screw more than 1/2 turn at a time.

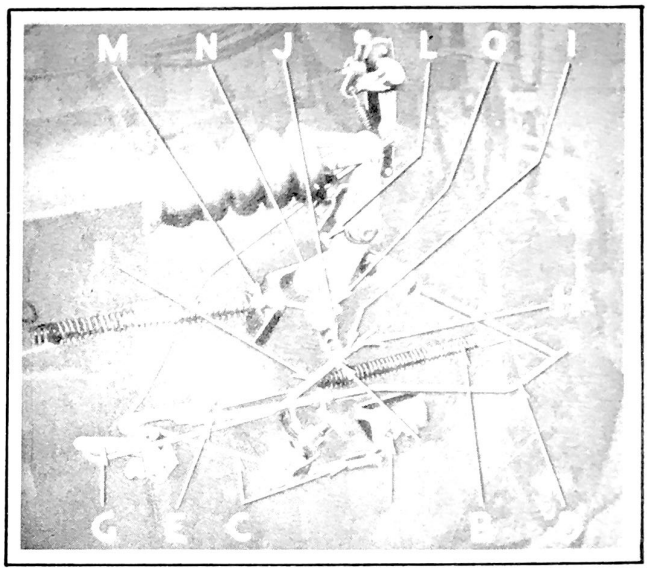

Figure 212 - Vacuum Clutch Control used with transmission overdrive (showing overdrive throttle switch contacted) by completely depressing accelerator pedal giving a wide open throttle. The overdrive throttle switch when contacted (as shown) completes the electrical circuit for shifting from overdrive to conventional drive.

Note: The overdrive throttle switch as shown in Fig. 200 is in overdrive.

A. Vacuum clutch accelerator switch arm.
B. Accelerator pedal spring.
C. Vacuum clutch accelerator switch to bell crank rod.
D. Accelerator pedal to bell crank rod.
E. Accelerator pedal to bell crank rod adjustment.
F. Vacuum clutch valve lever cam, threaded sleeve rod.
G. Accelerator bell crank lever (select hole suitable for car model when installing rod F).
H. End of sleeve to end of rod distance to be 1-5/32" (M.14,15, 17) 11/16" (all other models).
I. Look for adjustment H.
J. Vacuum clutch control cam lever.
K. Accelerator linkage and guide block.
L. Vacuum clutch control compensator lever pin.
M. Vacuum clutch cylinder tension spring.
N. Vacuum clutch control valve lever cam.
O. Hold cam against stop screw at this point when determining cushion point.

REFERENCES

SOURCE OF INFORMATION	DATE	SUBJECT

TRANSMISSION

Gear Ratios

Model 10 With 3" x 4-1/8" Engine		All other Models Including Model 10 with 3" x 5" Engine
2.88 to 1	Low	2.61 to 1
1.82 to 1	Second	1.65 to 1
1 to 1	High	1 to 1
3.5 to 1	Reverse	3.17 to 1

Teeth

Reverse Idler ..... 18 Teeth

Main Drive Gear -
Ratio - 2.88 to 1 ..... 17 Teeth

Main Drive Gear -
Ratio - 2.61 to 1 ..... 17 Teeth

Countershaft Gear Cluster -
2.88 to 1 Ratio ..... 26 Teeth
21 Teeth
17 Teeth
14 Teeth

Countershaft Gear Cluster -
2.61 to 1 Ratio .....25 Teeth
21 Teeth
17 Teeth
14 Teeth

Mainshaft - Low and Reverse 32 Teeth
External
Spline - 24 Teeth
Internal

Mainshaft - Intermediate ...
Helical - 25 Teeth
Clutch - 30 Teeth

Bearings and Bushings -
Main Drive Gear ..... Ball
Mainshaft Pilot ..... Needle
Roller
Mainshaft Rear ..... Ball
Reverse Idler ..... Steel Back
- Babbit
Countershaft Gear Cluster Steel Back
- Babbit

LUBRICANT.

See "Lubrication" section for specifications.

Capacity of transmission is 2-1/4 pints or pounds if disassembled and parts washed.

Capacity of transmission is 2 pints or pounds if drained and refilled.

Capacity of transmission and overdrive is 3-1/2 pints or pounds if disassembled and parts washed.

Capacity of transmission and overdrive is 3-1/4 pints or pounds if drained and refilled.

OVERDRIVE SPECIFICATIONS.

Cut in speed (standard overdrive rear axle ratio) ..... about 19 M.P.H.

Final axle ratio in overdrive with standard axle -

Actual Axle Ratio ..	Over-all ratio in over-drive
4-7/8 to 1	3.52 to 1
4-5/9 to 1	3.28 to 1
4-1/9 to 1	2.96 to 1

TRANSMISSION

The constant-Mesh, synchro-mesh transmission makes use of a synchro-mesh of second and high gears and sliding mesh of low and reverse gears. All gears are of the helical gear type.

The main drive gear is mounted on a ball bearing in the front end of the case. The mainshaft is mounted on a pilot needle roller bearing in the main drive gear hub (front end) and a ball bearing in the transmission case or overdrive adapter bolted to the rear of the case (rear end) and if the overdrive is used, the mainshaft extends through into the overdrive unit.

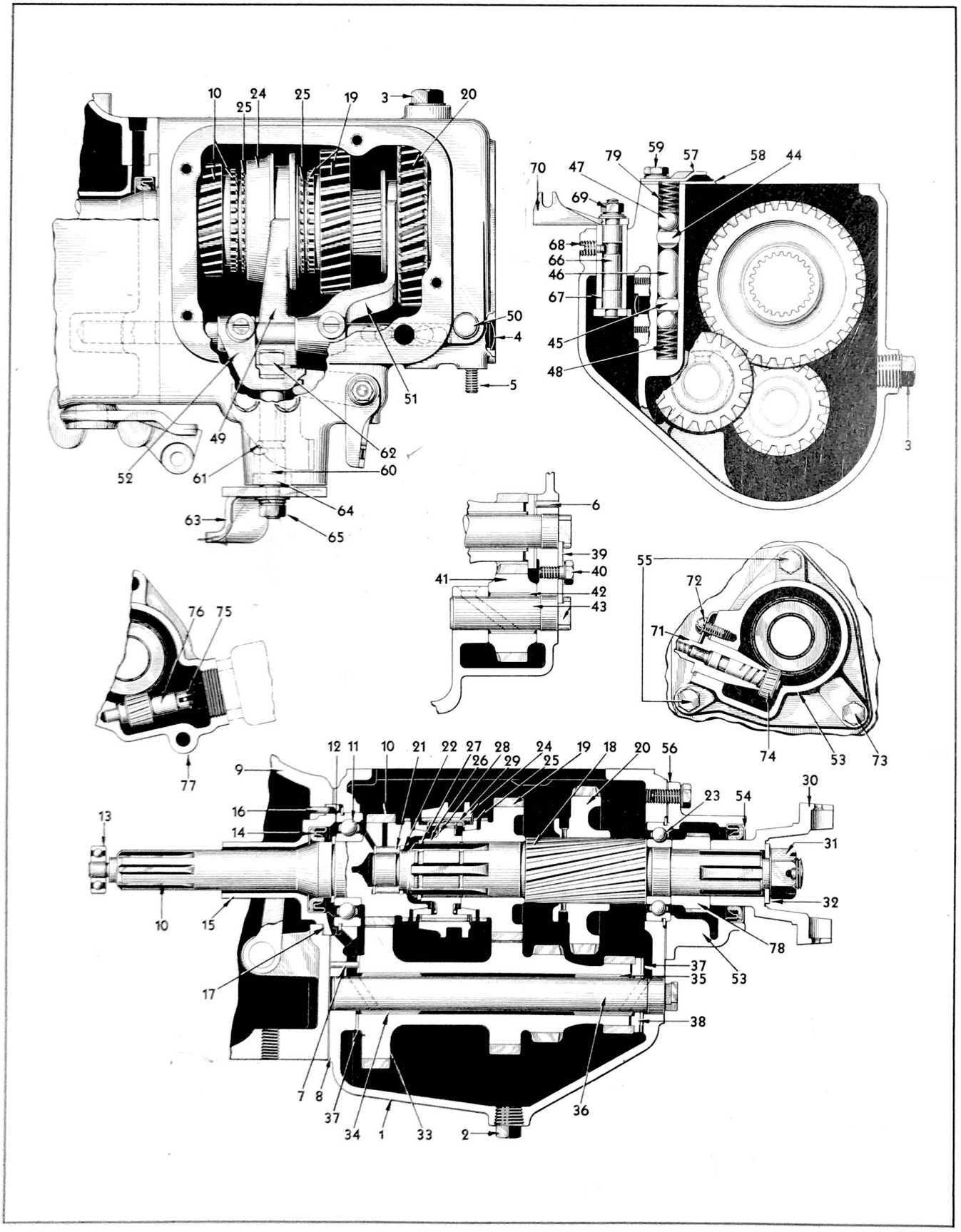
10
24
25
25
19
3
20
50
4
5
51
49
52
61
62
60
64
63
65
70
47
79
59
57
58
44
69
68
66
46
67
45
48
3
6
39
40
41
42
43
55
72
71
74
53
73
76
75
77
12
11
10
21
22
27
28
24
19
18
20
56
26
29
25
9
16
14
13
23
54
30
31
32
10
15
78
37
35
53
17
38
7
8
37
34
1
33
2
36

Figure 222 - Transmission

1. Transmission case
2. Drain plug
3. Filler plug
4. Shift rail opening expansion plug
5. Transmission case stud (left side at rear)
6. Countershaft gear cluster bronze thrust washer pin rear
7. Countershaft gear cluster bronze thrust washer pin front
8. Transmission case gasket, front
9. Clutch housing
10. Main drive gear assembly
11. Main drive gear bearing
12. Main drive gear lock ring
13. Main drive gear pilot bearing
14. Main drive gear oil seal
15. Main drive gear bearing retainer
16. Main drive gear bearing retainer locating pin
17. Main drive gear bearing retainer gasket
18. Main shaft
19. Main shaft intermediate gear
20. Main shaft low and reverse gear
21. Main shaft needle roller pilot bearing
22. Main shaft needle roller retainer
23. Main shaft rear bearing
24. Synchronizer shift sleeve
25. Synchronizer ring
26. Synchronizer shift sleeve hub
27. Synchronizer shift sleeve hub lock ring
28. Synchronizer spring
29. Synchronizer shift plate
30. Companion flange
31. Companion flange nut
32. Companion flange washer
33. Countershaft gear cluster
34. Countershaft gear cluster bushing, front
35. Countershaft gear cluster bushing, rear
36. Countershaft
37. Countershaft gear cluster bronze washer
38. Countershaft gear cluster steel washer
39. Countershaft and reverse shaft lock plate
40. Countershaft and reverse shaft lock place screw
41. Reverse idler gear
42. Reverse idler gear bushing
43. Reverse idler gear shaft
44. Low and reverse shift rail
45. Second and high shift rail
46. Shift rail interlock
47. Shift rail lock ball
48. Shift rail lock ball spring (high and intermediate)
49. Second and high shift fork
50. Breather
51. Low and reverse shift fork
52. Low and reverse shifter
53. Gear housing
54. Gear housing oil seal
55. Gear housing bolt
56. Gear housing gasket
57. Transmission cover
58. Cover gasket
59. Cover bolt
60. Shift shaft
61. Shift shaft pin
62. Shift shaft lever - inner
63. Shift shaft lever - outer
64. Shift shaft seal
65. Shift shaft nut
66. Shift selector lever and shaft
67. Shift selector shaft bushing
68: Shift selector shaft bushing set screw
69. Shift selector shaft nut
70. Shift selector lever - outer
71. Speedometer cable
72. Speedometer cable screw
73. Gear housing bolt
74. Speedometer pinion
75. Governor pinion lock ring
76. Governor pinion
77. Gear housing
78. Speedometer gear
79. Shift rail lock ball spring (low and reverse)

1940

Car # 45 Crank Shaft

1937 - HT R Front Fender

The countershaft gear cluster has steel backed bushings having a high tin content and is mounted on a stationary countershaft with bronze front and rear thrust washers pinned to the transmission case. A steel thrust washer to take the additional wear and thrust present at the rear end is used along with the bronze washer. Wear at the rear end can be overcome by thrust washer replacement. Reverse idler gear has a steel backed bushing having a high tin content and is mounted on a short shaft which is retained by a key at the rear end of the case. This key locks both the countershaft and reverse idler gear shaft.

Synchronizer rings are free in ends of inner shift sleeve and are actuated by three shift plates which fit in slots in the inner shift sleeve and engage notches in the synchronizer ring. The shift plates are held outward in the outer shift sleeve hub by a locking wire or ring engaging in the shift plates and the shift plates move with the shift sleeve to force the synchronizer rings against the cones on the shift sleeve hub for synchronization. Teeth on the outer rim of the synchronizer rings block or prevent gear engagement until synchronization is completed, at which time final movement of the outer sleeve hub causes the teeth on the rim of sleeve hub to slide past teeth on synchronizer rings and engage teeth on gears. The synchronizer shift sleeve hub is stationary on shift and does not move during synchronization and gear engagement.

MAIN DRIVE GEAR BEARING (FRONT) is a shielded type of ball bearing built to take end thrust. The shielded side of the bearing is toward the inside of the transmission. The bearing is a press fit on the main drive gear and is further held in place by a snap ring in the outer race which is grooved for it. This snap ring fits between the transmission case and the main drive gear bearing retainer and holds the outer race in position. A snap ring on the main drive gear holds the inner race in position.

REAR MAIN SHAFT BEARING is a ball bearing and it is a press fit on the transmission main shaft and is further held in place by a snap ring fitted into a groove in the outer race. This snap ring fits between the transmission case and the speedometer gear housing holding the outer race in position.

MAIN SHAFT PILOT BEARING used at the front end of the main shaft is a roller bearing. This bearing is composed of 16 rollers. The main drive gear inside diameter serves as the bearing outer race and the end of the transmission main shaft acts as an inner race. The rollers are prevented from moving out of the gear by a snap ring.

PRESSURE VENT is located on the top of the transmission case to equalize the atmospheric pressure within the transmission.

TRANSMISSION LUBRICATION. The transmission case should be kept filled to the height of the overflow plug with a lubricant according to the specifications given in the "Lubrication Section".

The standard transmission requires 2-1/4 pints if disassembled and the parts washed 2 pints (2 pounds) if drained and refilled and when the overdrive is used 3-1/2 pints (3-1/2 pounds) if disassembled and the parts washed or 3-1/4 pints (3-1/4 pounds) if drained and refilled.

The needle bearing in the main drive gear should have a small amount of viscous chassis lubricant according to the specifications in the "Lubrication Section". This should be spread around the inside of the main drive gear.

The countershaft cluster gear bore and main shaft intermediate gear bore should be lubricated with transmission and rear axle lubricant (specifications are given in "Lubrication Section").

If the clutch bell housing has been washed be sure to thoroughly lubricate the clutch shifter yoke shaft at both sides of the clutch shifter yoke.

TRANSMISSION BALL BEARINGS are two in number. One being used on the main drive gear and the other at the rear end of the mainshaft. Both bearings have a retaining ring in the outer race to secure them in their proper position. The main drive gear bearing can be removed by using Tool J 1134-H and applying a steady pressure on the retaining ring. The mainshaft rear bearing is removed by Tool J 1134-H and applying a steady pressure on the bearing cup.

Dirt or foreign matter is present in nearly every bearing removed during service work. In many cases there is enough dirt present that it affects the operation and can be felt in the bearing when it is revolved by hand. After bearings have been removed, do not spin the bearings and particularly do not spin bearings with an air hose.

Spinning a bearing at high speeds will almost certainly do considerable damage.

Do not lay bearings down on a bench where dirt is liable to mix with the lubricant in the bearing. Wrap bearings in any dry, clean paper until they can be washed and re-lubricated and then inspect them thoroughly.

Bearings should be washed in clean gasoline or kerosene. Hang them on a wire and remove oil, grease or dirt by moving them back and forth in the cleaning fluid, keeping them off the bottom to prevent dirt being picked up. Blow out the bearings with clean, dry air. Allow the air to run a while to clear all dirt and moisture out of the line. The main drive gear bearing (11) Fig. 222 is a shielded type bearing and must be held with the shield side up in order that any dirt may drop out readily.

Direct the flow of air directly into the open face of the bearing while holding the inner race and slowly rotate the outer race by hand. Do not allow the compressed air to spin the bearing. Lubricate the bearing with clean, new engine oil, rotating the bearings by hand in order to spread the lubricant over all surfaces.

Inspect the bearing for cracks and defects. Revolve the bearing slowly by hand with enough pressure on the races to force the balls into their proper contact.

A bearing that is smooth or only slightly rough after cleaning and oiling can be used over again.

Transmission mainshaft bearings are built originally with end play and because they may feel quite loose it does not necessarily indicate that they are worn and unfit for use.

Roughness, in most cases, is due to slight indentations in the races caused by steel chips, scale or grit in the oil. These indentations seldom affect the life of the bearing unless the races are badly roughened up and when this is the case the bearing will still be very rough after cleaning and should be replaced.

IMPROPER OPERATION can be caused by -

1. Clutch not completely released.
2. Dirt in the synchronizing unit.
3. Incorrect lubrication transmission.
4. Worn and scored synchronizing unit or wear of gears and bushings.

CLUTCH RELEASE must be complete to obtain a satisfactory transmission gear synchronized mesh.

A check for release can be made by depressing the clutch pedal and shifting the transmission into reverse or low speed. This shift should be made without clashing of gears when the car is not in motion.

If the clutch does not release properly, particularly in cold weather, check the clearance between the clutch pedal clamp bolt and the toe board as given in clutch section and adjust if necessary. Check the lubricant in the transmission (also overdrive if used) to determine if it is of the proper viscosity.

DIRT in the transmission can prevent the synchronized mesh of gears by scoring the synchronizing rings or shift sleeve hub cones.

Drain transmission and overdrive (if used) and thoroughly flush the transmission with kerosene by allowing transmission to run in neutral for about 15 seconds. Refill with clean lubricant according to specifications in "Lubrication Section".

IMPROPER LUBRICATION will retard the synchronizing of the gears for quiet shifting. If the proper viscosity of lubricant has been used and the gears still fail to synchronize satisfactorily, it will be necessary to remove the transmission from the car for further inspection.

TRANSMISSION PARTS INSPECTION. During either disassembly or assembling of the transmission, care should be taken to prevent scoring or bruising of any part. If there are nicks out of the gear teeth a noisy transmission operation will result. The bronze synchronizer rings, steel shift sleeve and hub should also be free of burrs or nicks as such defects will prevent proper synchronization

Teeth of all gears should show no pitting. Ball bearings must revolve freely and not have scores on either the inner or outer races. The synchronizing sleeve must slide freely.

Do not polish or change the angle of the cones or teeth on the bronze synchronizer ring.

The shifter forks and shift shaft with inner lever must be correctly assembled (Fig. 229) and the fork screws securely fastened.

TRANSMISSION REMOVAL FROM CAR WITH OR WITHOUT OVERDRIVE.

1. The transmission can be removed from inside the car. If car is equipped with overdrive the transmission with overdrive should be dropped onto the dolly of J-1502-H. (See Fig. 223).

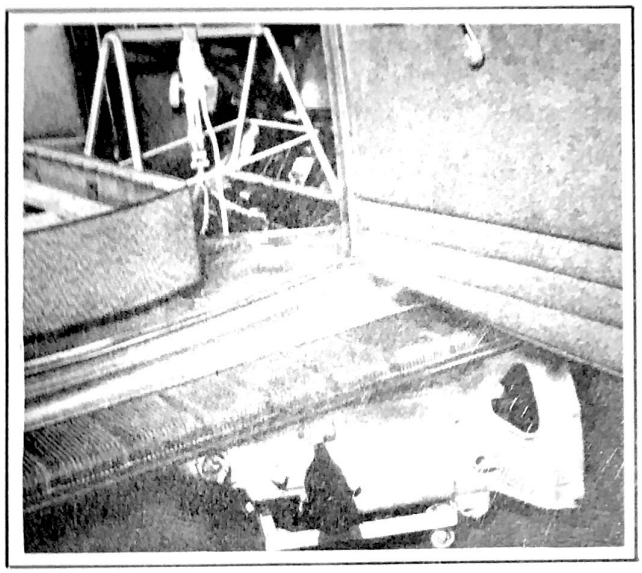

Figure 223 Transmission Hoist and Cradle

2. Remove accelerator pedal by taking out cotter pins in the clevis pins of the anchor bracket and bell crank link.

3. Pull rubber steering column hold cover up out of the way.

4. Remove the screws holding the kick pad and floor mat to the dash. Remove the floor mat trim clips. Remove floor mat.

5. Remove transmission floor opening cover.

6. Remove propeller shaft (U) bolt lock nuts and locks. Disconnect front universal joint.

CAUTION: After removing transmission floor opening cover, fasten the accelerator pedal operating rod in such a way that it will not drop on the starting motor tor solenoid.

7. Unhook the clutch pedal lever return spring.

8. Remove the two cross shaft bracket bolts.

9. Remove clutch control link clevis pin.

10. Release clutch pedal assisting spring.

11. Remove transmission Handy Shift control tube to transmission shift rod cotter pin, washer and grommet.

12. Remove transmission casing lower anchor bracket screws and bracket, also shift shaft outer lever nut, washer and lever.

13. Remove the two flywheel guard to clutch housing screws and two engine rear mounting bolts. Do not remove the rear mounting to clutch housing bolt.

14. Jack up the rear end of engine about 1/2" off the frame.

15. Remove clutch housing to transmission bolts.

16. Disconnect speedometer cable with pinion at transmission.

17. Lift transmission and remove. If overdrive is used, disconnect overdrive control and wiring connections and use J 1502-H Hoist and lower unit onto the dolly.

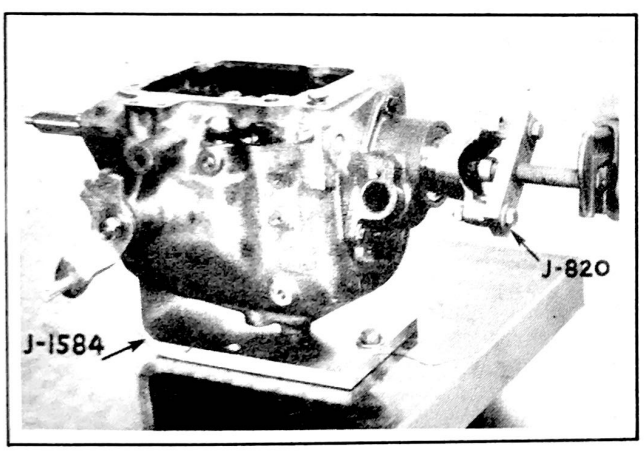

Figure 224 - Removing Universal Joint Companion Flange with Puller J 820 (Trans. mounted on J 1584 holding Fixture)

CHECK-UP BEFORE DISASSEMBLY.

There are cases when a complete disassembly of the transmission can be avoided by a preliminary check-up:

1. Check for proper operation of shift shaft lever and shift selector lever.
2. Check for main shaft end play.
3. Remove transmission cover and make general operation inspection.

DISASSEMBLY OF TRANSMISSION

1. Remove six bolts (80), Fig. 222, that hold clutch housing to transmission case and remove clutch housing assembly (consists of housing (9) bearing retainer (15) with oil seal (14) and the clutch linkage . The main drive gear bearing retainer (15) is a light press fit in the bell housing and can be removed with a soft hammer. In this retainer is pressed the main drive gear oil seal.

2. Remove drain plug (3) in bottom of case and drain out old lubricant. Place transmission in Holding Fixture J 1584 and bolt securely at front end with two clutch housing cap screws.

NOTE: If car is equipped with vacuum clutch it is necessary to unscrew governor switch from gear housing (71). To remove pinion (76) remove governor pinion lock ring (75).

3. Remove cover screws (59) and lift cover (57) off cautiously to prevent shift rail lock spring (79) from jumping out. Remove spring and lock ball (47) by tilting the case on its side.

4. Flush out and thoroughly clean inside of case and gears.

5. Remove companion flange nut (30), lock washer and plain washer (32).

6. If companion flange (30) is tight on end of main shaft, pull off with Universal Joint Puller J 820.

NOTE; It is not necessary to remove the companion flange if speedometer gear housing oil seal (54), the main shaft rear bearing (23) or speedometer gear (78) are not to be replaced.

7. Remove three speedometer gear housing cap screws (55 and 73) and remove speedometer gear housing (53). Remove speedometer gear (78). The speedometer gear housing contains the oil seal (54), the leather of which must not be torn nor the housing chipped in removing or installing.

REMOVING MAIN SHAFT AND MAIN SHAFT GEARS

8. Remove low and reverse shift fork (51) lock screw and low and reverse shifter (52) lock screw with screw driver.

9. Slide low and reverse shift rail (44) out of front of case. Remove shift fork (51) and reverse shifter (52) from inside the case.

10. Remove shift rail interlock (46) by tilting transmission on its side.

11. Remove second and high shift fork (49) set screw with screw driver.

12. Slide second and high shift rail (45) out of case. Remove shift fork (49) from inside the case.

13. Remove lock ball and spring (48) by tilting case on its side.

141 Slide the main shaft (18) back far enough to expose the synchronizer shift sleeve hub lock ring (27) and tilt front end of shaft upward.

15. Remove lock ring (27) by spreading with pliers J 1575, as shown in Fig. 225.

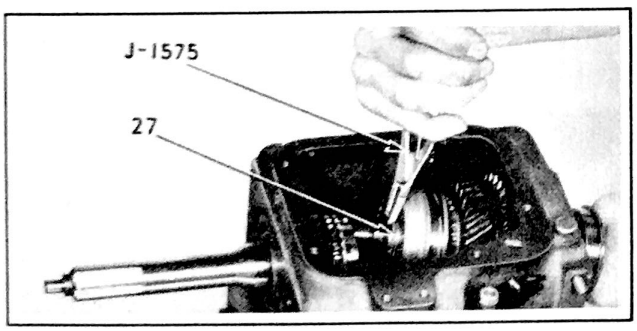

Figure 225 - Remove or Install Synchronizer Shift Sleeve Hub Lock Ring With Pliers J-1575

16. From inside the case slide off the main shaft in order given - the synchronizer unit (24), intermediate gear (19) and low and reverse gear (20) and pull out main shaft with ball bearing (23) on it.

NOTE: The synchronizer unit consists of -

1 Synchronizer shift sleeve (24, Fig. 222)
1 Synchronizer shift sleeve hub (26)
3 Synchronizer shift plates (29)
2 Synchronizer shift plate springs (28)
2 Synchronizer rings, bronze (25)

REMOVING COUNTERSHAFT AND REVERSE IDLER GEAR SHAFT AND GEARS

17. Remove countershaft and reverse gear plate screw (40) and drive out plate (39) at rear end of case with a drift.

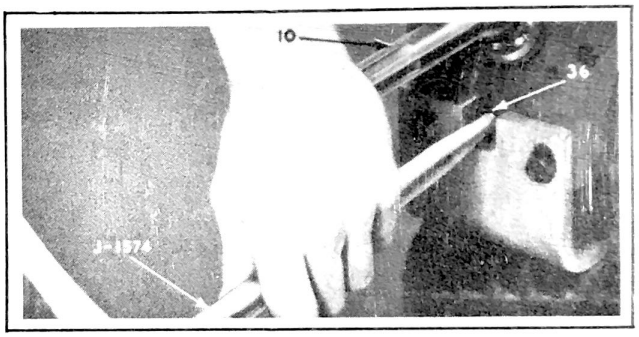

Figure 226 - Driving Out Countershaft With J-1574 Driver

18. Drive countershaft (36) out of rear end of case with Driver J 1574, (Fig. 226).

19. Grasp end of main drive gear (10) and pull it out of front end of case. If necessary, use J 1574 driver to remove main drive gear.

20. Lift out countershaft gear cluster (33), front and rear bronze (37) and the rear (38) steel thrust washers. Examine them for wear and replace if necessary..

21. Working through main shaft bearing hole in front face of case, drive out reverse idler gear shaft (43) with Driver J 1574, (Fig. 227).

22. Remove reverse idler gear (41) from case.

NOTE: The main drive gear contains the needle roller bearing for the main shaft, the needle roller bearing retaining ring and the main drive gear ball bearing with its retaining ring.

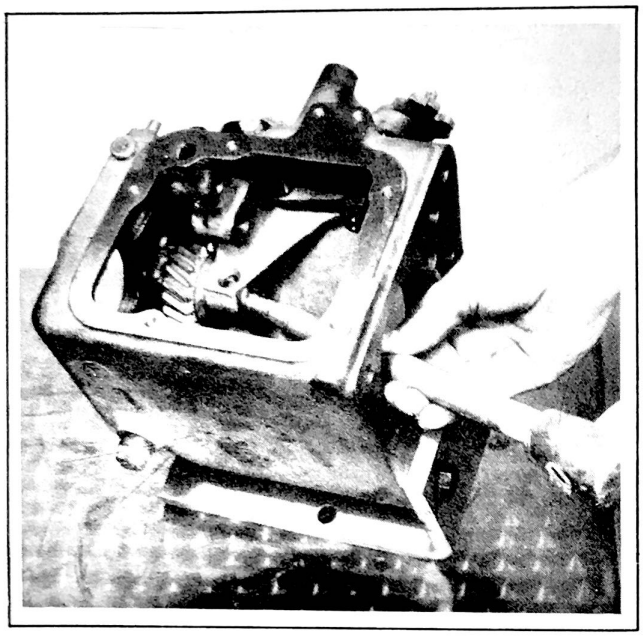

Figure 227 - Driving Out Reverse Idler Shaft With Driver J-1574

REMOVING SHIFT SELECTOR SHAFT AND SHIFT SHAFT LEVERS - INNER AND OUTER

23. Remove shift selector shaft nut (69), washers and shift selector lever - outer (70).

24. Remove shift selector shaft bushing set screw (68) with screw driver.

25. Remove shift selector lever and shaft (66) from inside of case and pull shift selector steel bushing (67) out from top.

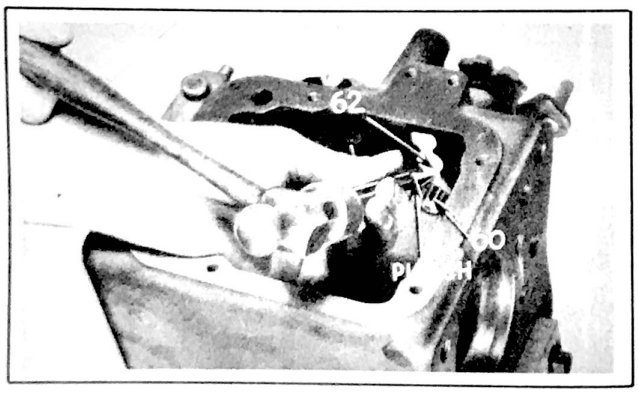

Figure 228 - Marking Position of Shift Shaft Inner Lever on Shift Shaft

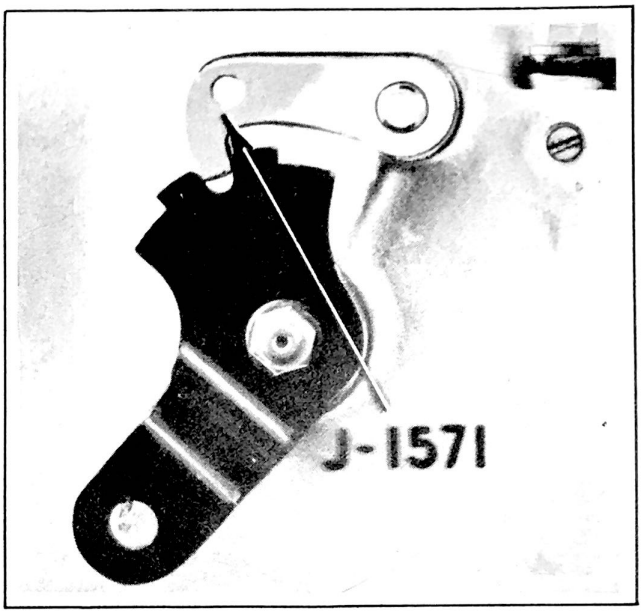

Figure 229 - Indexing Correct Position of Shift Shaft Inner Lever on Shift Shaft With Tool J-1571

26. Punch mark the position of shift shaft inner lever (62) and shift shaft (60) with sharp punch as these parts must be reinstalled in their original position. See Fig. 228. If these parts are not indexed before removal, their correct position must be indexed by using Indexing Tool J 1571, as shown in Fig. 229.

NOTE: The shift shaft and shift shaft inner lever are splined and must be reassembled in the same position as they were originally.

27. Remove the shift shaft nut (65) and washers and remove shift shaft lever - outer (63).

28. Remove shift shaft pin (61) with small diameter punch.

29. Remove shift shaft lever - inner (62) and withdraw shift shaft (60) and felt seal (64).

REMOVING AND REPLACING MAIN DRIVE GEAR BEARING RETAINER OIL SEAL

30. Remove main drive gear bearing retainer (15) by tapping it lightly with a soft hammer toward rear of clutch housing.

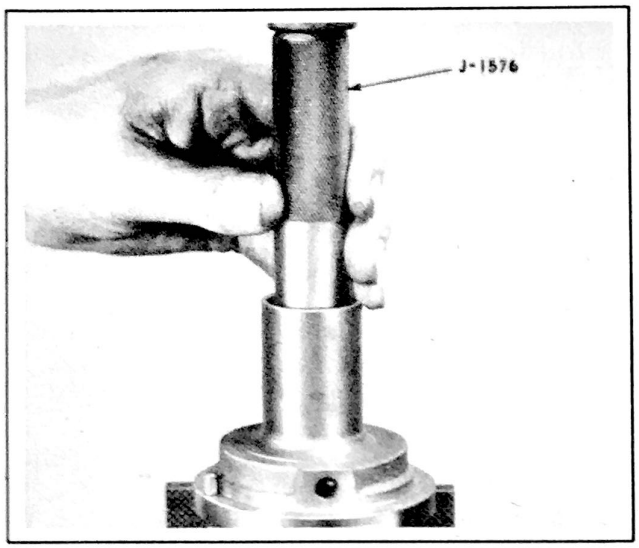

Figure 230 - Removing Main Drive Gear Oil Seal Using Tool J-1576

31. Place two small sections of Oil Seal Remover J 1576 between oil seal (14) and retainer (15) and place retainer in vise. Place driver in retainer and tap with soft hammer. See Fig. 230.

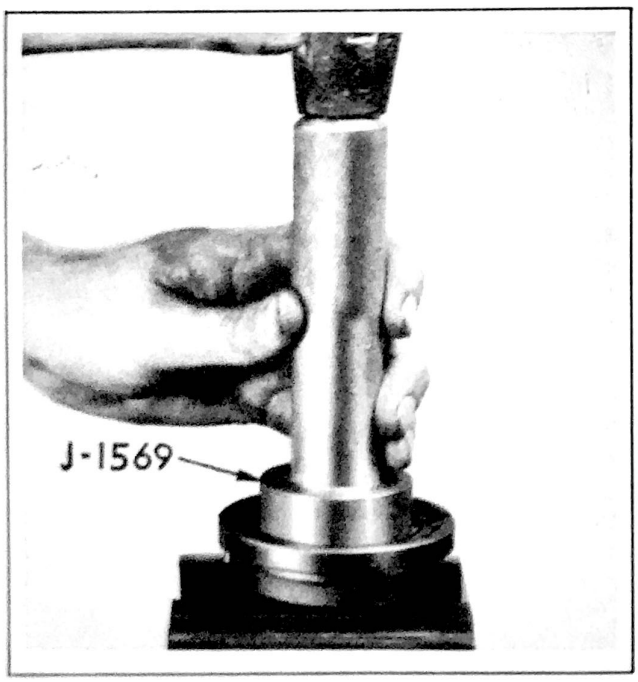

Figure 231 - Replacing Main Drive Gear Oil Seal Using Tool J-1569

32. Reverse position of retainer in vise. Install new oil seal and press into place with Replacer J 1569. See Fig. 231.

33. Place new gasket (17) on main drive gear bearing retainer and install retainer in clutch housing, matching retainer locating pin (16) with hole in clutch housing.

NOTE: The locating pin makes it possible to install the main drive gear bearing retainer in only one position, thus assuring that the lubrication hole for the clutch throwout bearing (in the bell housing) will be in line with the oil hole in the retainer. The throwout bearing is lubricated from a grease fitting on the outside of the clutch bell housing. (Lubricate every 1000 miles).

DISASSEMBLING AND REASSEMBLING MAIN DRIVE GEAR

34. Remove needle roller retainer (22) with screw driver and remove rollers (21).

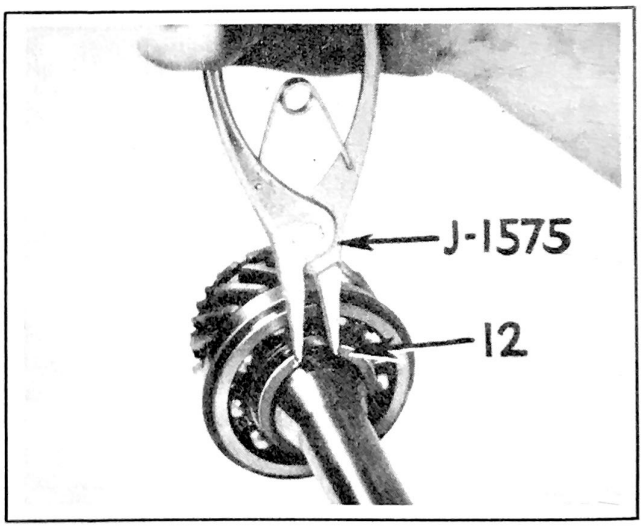

Figure 232 - Removing Main Drive Gear Bearing Retaining Lock Ring Using Pliers J-1575

35. Remove main drive gear lock ring (12) by spreading with Pliers J 1575. Fig. 232)

36. Engage jaws of Puller J 1134-H over bearing ring and remove bearing (11). See Fig. 233.

NOTE: Do not remove this bearing by pounding as damage to the bearing will result.

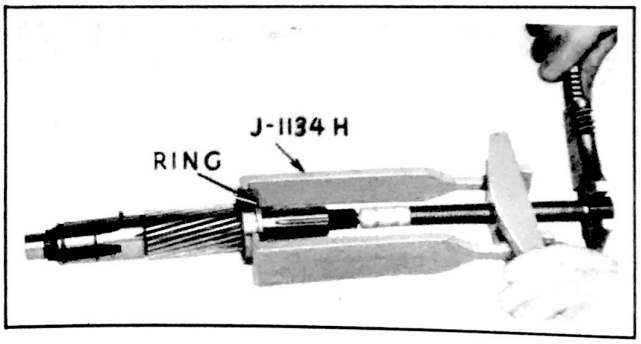

Figure 233 - Pulling off Main Drive Gear Bearing With Tool J-1134-H

NOTE: The main drive gear ball bearing is a shielded type of bearing and the shielded side is toward the inside of the transmission.

37. After placing bearing (11) on main drive gear, with bearing ring toward front end of gear, drive it in place with Replacer J 1570., (Fig. 234).

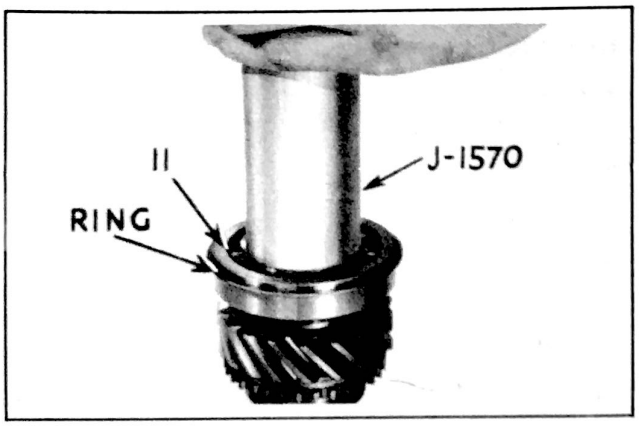

Figure 234 - Pressing Main Drive Gear Bearing in Place With Tool J-1570

38. Install main drive gear lock ring (12) using Pliers J 1575. Use a new lock ring if the old one is injured.

NOTE: No appreciable play of the lock ring in its groove is permissable because of the possibility of serious damage to the transmission. Lock rings must be fitted into their groove.

To insure a proper fit there are three snap rings of various thicknesses - .090" - .093" - .096".

39. Coat pocket of main drive gear with viscous chassis lubricant and install needle rollers (21) and needle roller retainer (22).

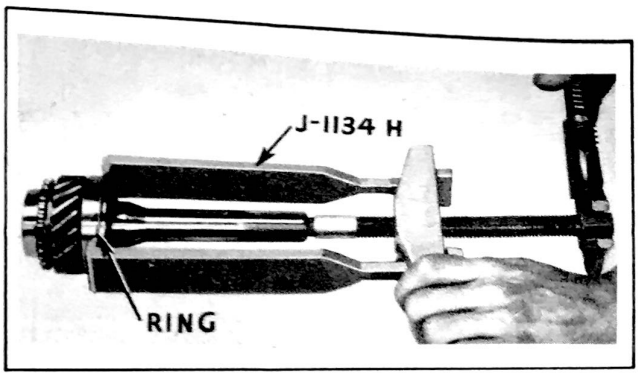

Figure 235 - Pulling Main Shaft Ball Bearing With Tool J-1134-H

REMOVING AND REPLACING MAIN SHAFT REAR BEARING

40. Engage jaws of Bearing Puller J 1134 -H over ring on bearing (23) and remove bearing. See Fig. 235.

NOTE: Under no circumstances should a hammer be used to remove this bearing as it will be damaged.

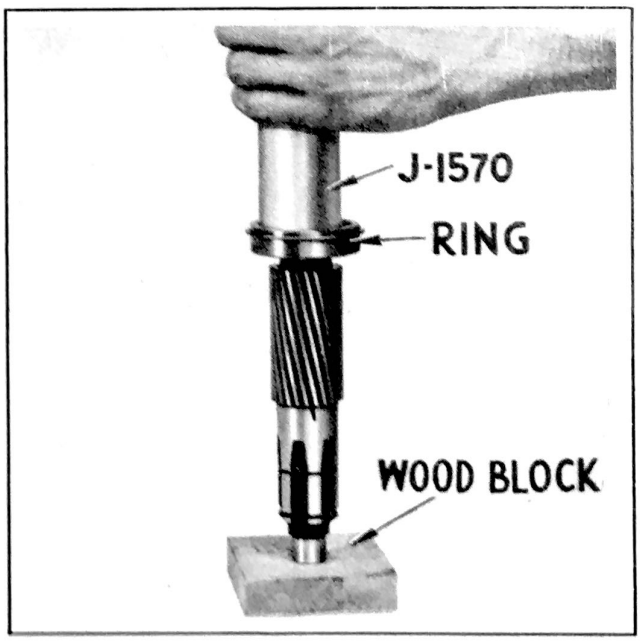

Figure 236 - Pressing Main Shaft Ball Bearing on With Tool J-1570

41. Place bearing (23) on main shaft with ring on bearing toward rear of main shaft and drive it in place with Replacer J 1570. See Fig. 236.

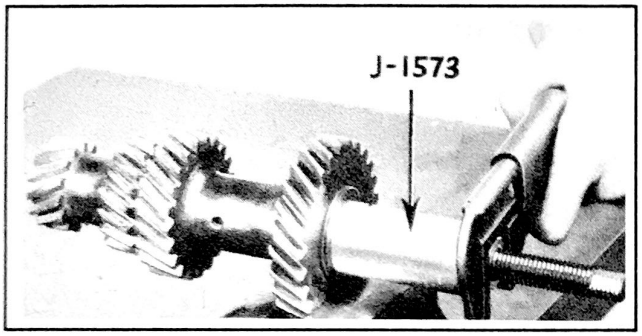

Figure 237 - Removing Countershaft Gear Cluster Bushings With Tool J-1573

REMOVING AND REPLACING COUNTERSHAFT GEAR CLUSTER BUSHINGS.

42. Place gear cluster (33) in vise and thread tapered end of Puller J 1573 firmly into bushing. Place puller sleeve, washer and nut on screw shaft. Turn nut with wrench and pull out bearing. Repeat operation on remaining bushing. See Fig. 237.

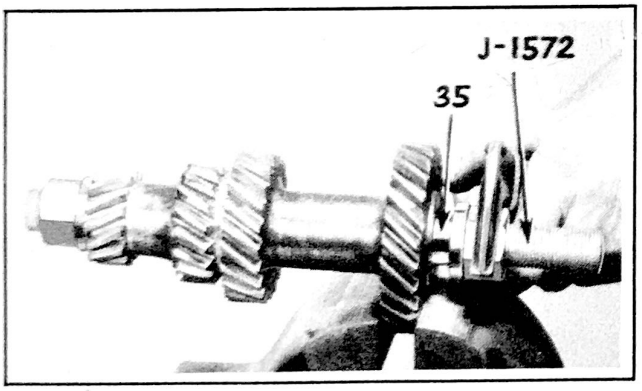

Figure 238 - Installing Countershaft Gear Cluster Bushings With Tool J-1572

43. Place both bushings (35) in position in gear cluster, install Bushing Replacer J 1572 in position and press bushings into gear. See Fig. 238.

44. Insert reamer guide in one end of gear cluster, install Bushing Reamer KMO 338 and ream bushing to size. Repeat operation on remaining bushing. See Fig. 239.

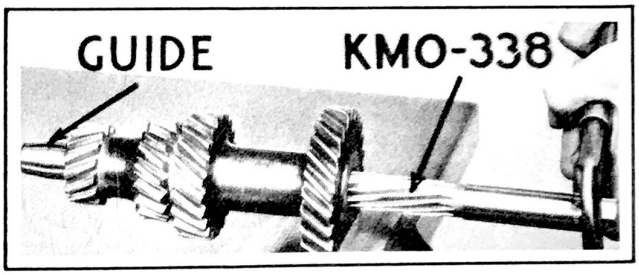

Figure 239 - Reaming Countershaft Gear Cluster Bushings With Tool KMO-338

REMOVING AND REPLACING REVERSE IDLER GEAR BUSHING

45. Place reverse idler gear (40) in vise and thread tapered end of bushing Puller J 1573 firmly into bushing (42). Place puller sleeve, washer and nut on screw shaft. Turn nut with wrench and remove bushing. See Fig. 237.

46. Place bushing in position in gear, install Bushing Replacer J 1572 with long sleeve through bushing and press bushing into gear. See Fig. 240.

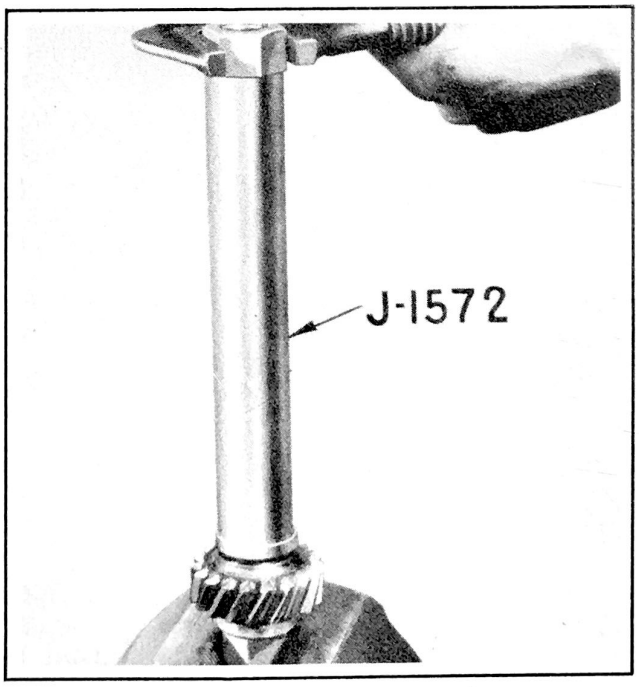

Figure 240 - Installing Reverse Idler Gear Bushing With Tool J-1572

47. Insert reamer guide in one end of bushing, install Bushing Reamer KMO 338 and ream bushing to size. See Fig. 239.

REASSEMBLING REVERSE IDLER GEAR SHAFT, COUNTERSHAFT AND MAIN DRIVE GEAR

48. Place reverse idler gear (41) in position in case and install reverse idler. gear shaft (43) tapping it lightly with a soft hammer.

49. Coat the two countershaft gear cluster bronze thrust washers (37) with viscous chassis lubricant and place them on their retaining pins (7) in the case.

NOTE: Do not use thrust washers that are scored or worn. Use new washers in order to maintain proper clearances.

50. Install steel washer (38) on rear end of countershaft gear cluster (33) and place cluster in bottom of case. Lubricate cluster gear bushings with transmission lubricant before assembling countershaft.

51. Install main drive gear assembly (10) in case.

52. Lift countershaft gear cluster (33) into position and install countershaft (36) tapping it lightly with a soft hammer.

53. Install countershaft and reverse idler gear shaft lock plate (39) and screw (40) in back face of transmission. Tighten screw securely.

INSTALLING SHIFT SELECTOR AND SHAFT ASSEMBLY AND SHIFT SHAFT LEVERS - INNER AND OUTER

54. From inside the case, install shift selector and shaft bushing (67) in case and insert shift selector and shaft assembly (66) into bushing. Install set screw (68).

55. Place outer selector lever (70) in position (pointing toward left of case), install plain washer, shakeproof washer and nut (69) and tighten securely.

56. Install shift shaft (60) in case and replace pin (61) in the case. Install felt washer (64), outer shift lever (63), plain washer, shakeproof washer and nut (65) and tighten securely.

57. Install splined shift shaft inner lever (62) on the splined shift shaft (60) so that punch marks match.

NOTE: in the event these parts were not marked prior to removal, use indexing tool J 1571 to position them correctly.

Install index pivot in drilled boss above lever and engage index finger in notch in lever. Then install inner lever in a true vertical position.

INSTALLING MAIN SHAFT AND MAIN SHAFT GEARS

58. Install main shaft (18) part way in the case.

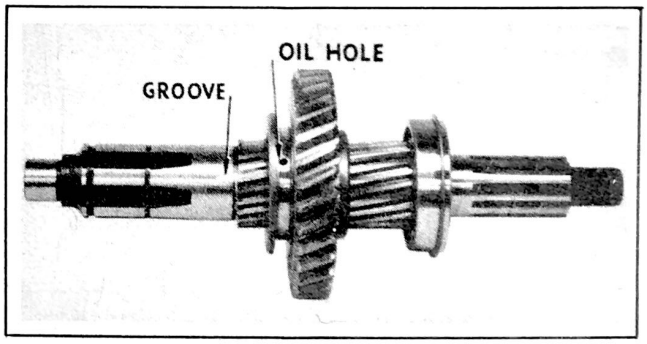

Figure 241 - Lining Up Oil Hole in Low and Reverse Gear With Oil Groove in Main Shaft

59. Place low and reverse gear (20) with shift fork flange toward front of shaft. It is important that the four oil holes (three not shown) be lined up with grooves in main shaft. See Fig. 241.

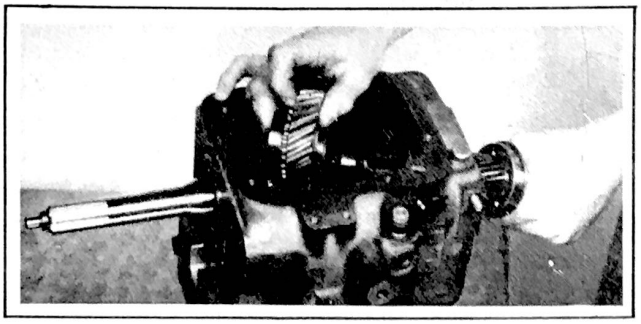

Figure 242 - Intermediate Gear is Installed With Tapered Side of Hub Toward Front

60. Slide intermediate gear (19) on main shaft with the tapered side of the hub toward the front of the main shaft. See Fig. 242.

INSTALLING SYNCHRONIZER UNIT ON MAIN SHAFT.

61. Assemble the three synchronizer shift plates (29) in the synchronizer shift sleeve hub (26). Then install the two synchronizer springs (28) so that one end of each spring rests in the same groove of shift plate (29) with the free ends running in opposite directions. Do this on the bench.

62. Install the synchronizer hub (26), plates (29) and springs (28) in shift sleeve (24). Undercut on hub should point toward rear of transmission. This is also a bench operation.

63. Assemble the two bronze synchronizer rings (25) in the shift sleeve hub (26) with the plates (29) in the notches. See Fig. 243.

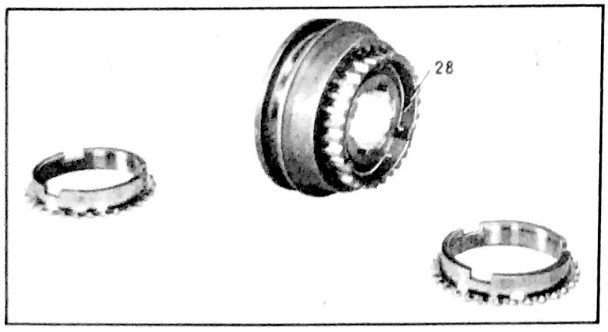

Figure 243 - Countersunk Face of Synchronizer Shift Sleeve Hub Toward Rear

64. Install synchronizer unit, assembled in steps 61-62-63, on main shaft with the tapered side of the shift sleeve (24) toward the front of the main shaft or transmission. (Fig. 244).

65. Install synchronizer shift sleeve hub lock ring (27) on end of main shaft (18) using Pliers J 1575, as shown in Fig. 225. Use a new lock ring. No appreciable play is permissible because of the possibility of serious damage to the transmission. Lock rings must be carefully fitted into their grooves. To insure proper fit there are four snap rings of various thicknesses - .087" - .090" - .093" - .096".

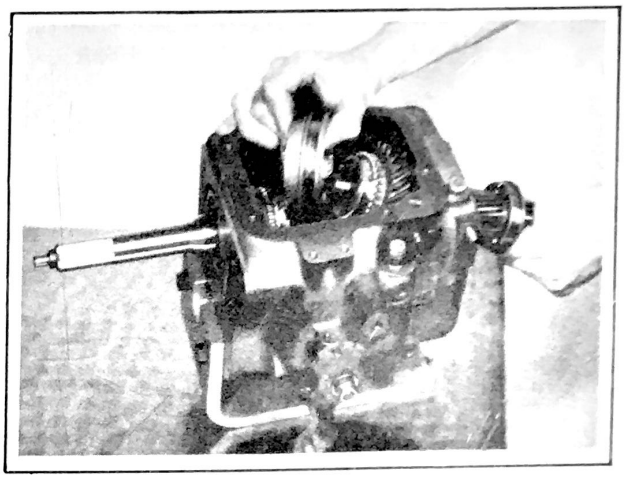

Figure 244 - Installing Synchronizer Unit With Tapered Side of Sleeve Toward Front

66. Engage front end of main shaft in roller bearing in pocket of main drive gear and press firmly into place.

INSTALLING SHIFT RAILS AND FORKS

67. Place speedometer gear (78) on main shaft, install new speedometer gear housing gasket (56), install gear housing (53), cap screws (55 and 73) and lock washers and tighten securely.

68. Install one shift rail lock ball spring (48) and lock ball in hole in case.

69. Insert second and high shift rail (45) partly in case. Place second and high shift fork (49) in groove of synchronizer shift sleever(24) and slide shift rail through shift fork. Install set screw and tighten securely.

70. Drop shift rail interlock (46) into hole in case.

INSTALLING SHIFT RAIL LOCK BALL AND SPRING

71. Insert low and reverse shift rail (44) partly in case. Replace the low and reverse shifter (52) in position behind the shift shaft inner lever (62) and slide shift rail (44) through shifter.

72. Place low and reverse shift fork (51) in position in low and reverse gear (20) and slide shift rail through fork and into case. Install both set screws and tighten securely.

NOTE: The low and reverse shift rail lock ball spring (79, Fig. 222) is a heavier spring than the one for the high and intermediate shift rail. Do not reverse their positions.

73. Install companion flange (30), plain washer (32), lock washer and nut (31) and tighten nut securely.

74. Install remaining shift rail lock ball (47) and lock ball spring (79).

75. Install new transmission cover gasket (58), cover (57), lock washers and cap screws (59).

TRANSMISSION ASSEMBLY INSTALLING.

76. Install new clutch housing gasket (8), clutch housing (9), six clutch housing to transmission case cap screws (80) and lock washers and tighten securely.

77. Install drain plug (2), refill with 2-1/4 pounds of S.A.E. 90 E.P. or S.A.E. 80 E.P. lubricant and install filler plug (3).

SYNCHRONIZER RING AND SLEEVE SET. Some of the synchronizer rings and sleeves have been made with a 110 degree chamber on the cones or teeth and some with a 90 degree.

A 110 degree ring or sleeve cannot be used with a 90 degree.

The 110 degree shift sleeve is marked with a groove on the outside face and the 110 degree ring is marked "110" on the flange face.

Do not use a 90 degree part with a 110 degree one.

HANDY SHIFT

"HANDY SHIFT" gear shifting mechanism is operated from a control lever located just below the steering wheel. This lever is pivoted in a housing that is attached to the upper end of a tube placed just above and parallel with the steering column.

Gear shifting with the "Handy Shift" permits the same movements that nearly all drivers use.

Low gear - raise the control lever and move to the rear.

Reverse gear - raise the control lever and move forward.

Second speed - depress the lever and move forward.

High speed - depress the lever and move to rear.

The backward and forward movement of the gear shift control lever (1, Fig. 245) imparts a rotary motion to the tube (7) and lever which is welded to its lower end. This rotary motion moves the control tube to transmission rod, (27) and shift shaft outer lever (24) backward and forward. The shift shaft is fastened in the transmission case and is operated by this outer lever, there being an inner lever on it for moving the gears into their different positions.

HANDY SHIFT CROSS SHIFTING is a sidewise shifting movement enabling engagement of the gears desired. A wire cable (5) operates shift selector lever outer (20) Fig. 222 which is mounted on shaft (66, Fig. 222).

HANDY SHIFT OPERATING ROD ADJUSTMENT. The gear shift control lever should be at right angles to the center line of the car when in neutral position. Adjustment is made by removing the clevis pin and cotter pin from the steering gear end of the rod (12, Fig. 246).

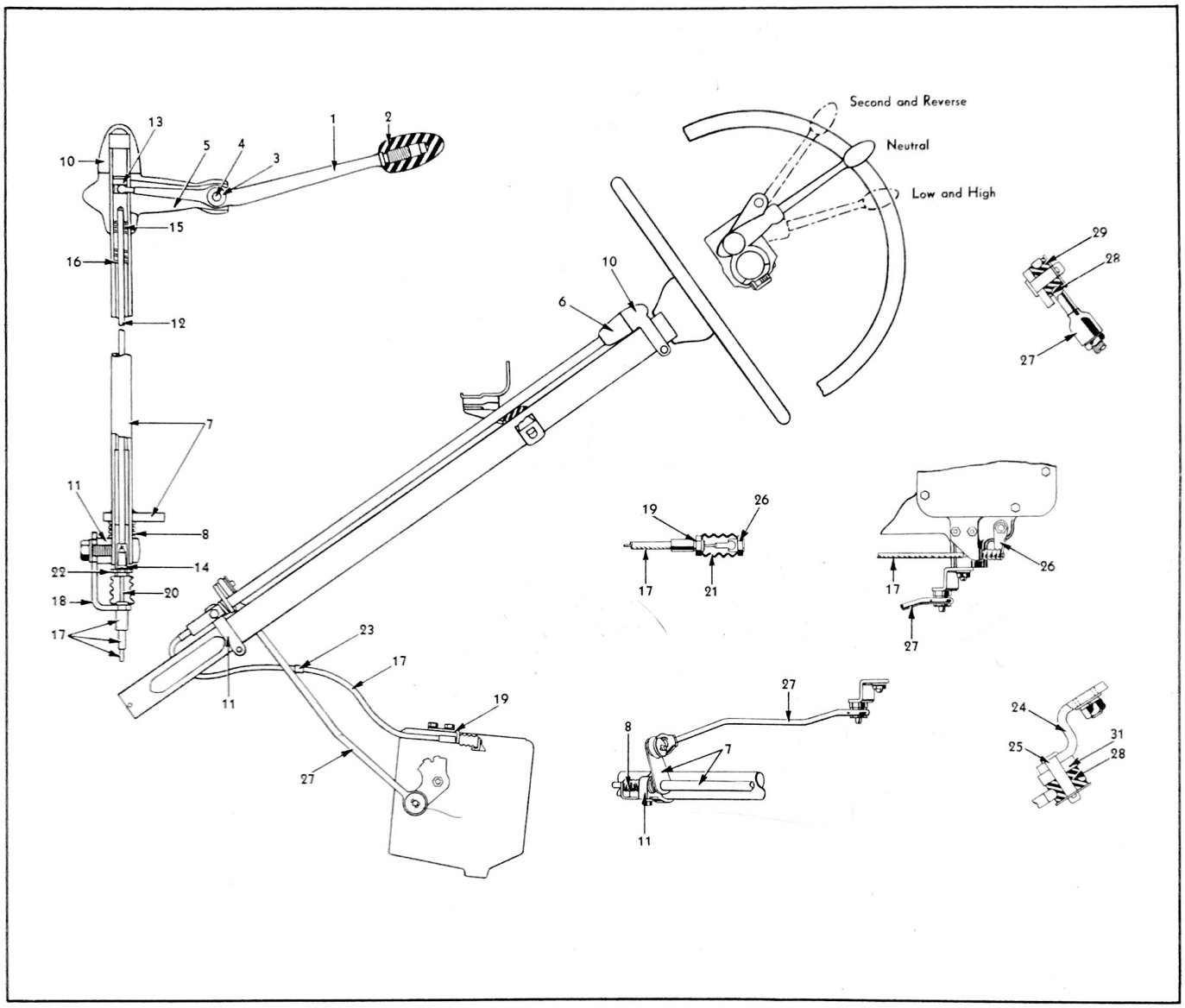

Figure 245 - Handy Shift Details

1. Control lever
2. Control lever knob
3. Control lever anti-rattle washer
4. Control lever fulcrum
5. Control lever fulcrum bracket
6. Control lever fulcrum bracket ring
7. Control lever tube and fulcrum bracket
8. Control lever compression spring
9. Control lever compression spring seat
10. Control lever tube bracket - upper
11. Control lever tube bracket - lower
12. Control lever push rod
13. Control lever push rod end - upper
14. Control lever push rod end - lower
15. Control lever push rod upper compression spring
16. Control lever push rod spring seat
17. Control wire, casing and bracket
18. Control wire anchor bracket - upper
19. Control wire anchor bracket - lower
20. Control wire dust boot (steering end)
21. Control wire dust boot (trans. end)
22. Control wire anchor
23. Control wire casing clip (at clutch housing)
24. Trans. shift shaft outer lever
25. Trans. shift shaft outer lever pin
26. Trans. shift selector lever, outer
27. Control tube to trans. rod
28. Control tube to trans. rod end grommet
29. Control tube to trans. rod end pin washer
30. Control tube to trans. rod clevis
31. Control tube to trans. rod spacer

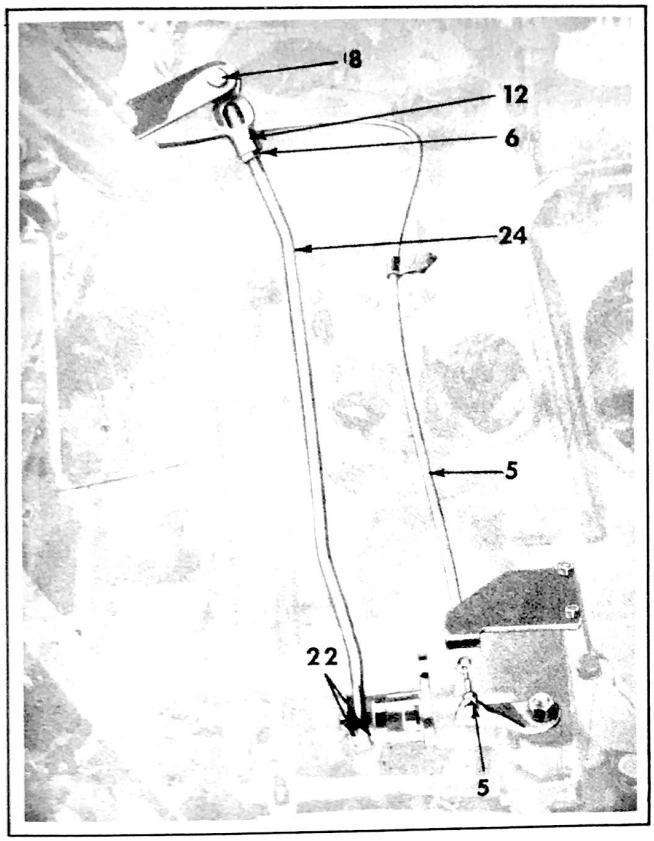

Figure 246 - Handy Shift Control

5. Control wire, casing and bracket.
6. Control to transmission rod tube clevis lock nut.
8. Control to transmission rod tube pin.
12. Control to transmission rod tube clevis.
22. Control to transmission rod bushing.
24. Control to transmission rod tube.

The transmission shift lever and the gear shift hand lever must be in the neutral position. Loosen rod lock nut (6) and turn the clevis (12) until the clevis pin will drop into the lever (9) without moving either lever.

HANDY SHIFT CROSS SHIFT ADJUSTMENT is made with the hand control lever in the extreme up position which is between the low and reverse positions.

Loosen bolt (21, Fig. 247) at the lower end of the steering column and pull the casing bracket (5) up until all slack is

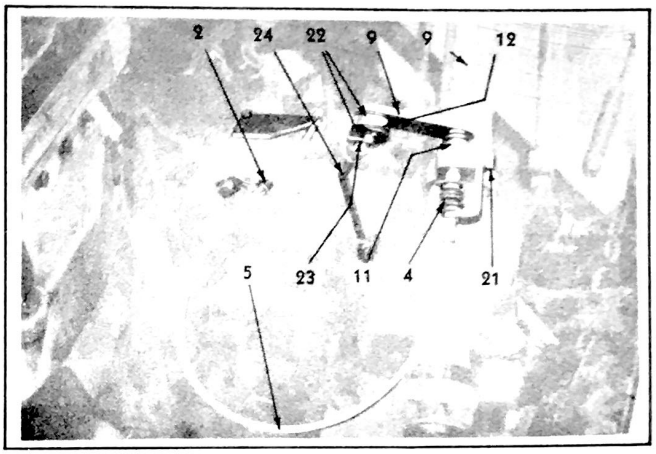

Figure 247 - Handy Shift Control

2. Control wire casing clip at clutch housing.
4. Control wire dust boot.
5. Control wire, casing and bracket.
9. Control tube lever.
9. Control tube.
11. Control lever compression spring.
12. Control to transmission rod tube clevis.
21. Control lever lower tube bracket bolt.
22. Control to transmission rod bushing.
23. Control to transmission rod tube pin, cotter pin.
24. Control to transmission rod tube.

out of the casing and the shift lever at the transmission is fully over to the low and reverse side. Check at transmission.

Tighten the bracket cap screw in place. The anchor (22, Fig. 245) in control wire should have clearance at the top and bottom of travel.

HANDY SHIFT PARTS REMOVING AND INSTALLING requires the removal of the horn button and steering wheel except in the case of the lower control rod to transmission and cable.

HANDY SHIFT CONTROL TUBE UPPER BRACKET REMOVING. Remove horn button and steering wheel. (See Steering Gear Section).

Remove control tube upper bracket (10, Fig. 245) clamp bolt, using a Phillip's screw driver.

Remove upper bracket (10) and fulcrum bracket ring (6).

To install, reverse procedure of removal.

HANDY SHIFT CONTROL LEVER REMOVING. Remove horn button and steering wheel. (See Steering Gear Section.)

Remove control tube upper bracket (10, Fig. 245) clamp bolt, using a Phillip's screw driver.

Remove upper bracket (10) and fulcrum bracket ring (6).

Remove control lever fulcrum (4) with an Allen wrench.

Withdraw lever (1) and anti-rattle washer (3).

Remove control wire anchor (22) at the bottom of the steering column and push end (14) of push rod (12) upward to expose control lever push rod end, upper (13).

To reassemble, reverse the procedure of removal. Apply a small amount of viscous chassis grease in the bracket (10) before installing.

HANDY SHIFT CONTROL LEVER FULCRUM BRACKET REMOVING.

1. Remove front seat cushion, accelerator pedal and floor mat.

2. Remove transmission opening floor cover.

3. Remove horn button and steering wheel as given in Steering Gear Section.

4. Disconnect control rod (27) at steering gear end.

5. Remove control wire casing anchor bracket bolt and wire anchor (22).

6. Remove jacket tube bracket cap.

7. Pull jacket tube and control tube (7) off the steering column tube.

8. Remove control tube upper bracket clamp bolt, bracket (10) and bracket ring (6).

9. Remove control lever fulcrum (4) control lever (1) and anti-rattle washer (3).

10. Remove fulcrum bracket set screw.

11. Mark control tube (7) and fulcrum bracket to insure the bracket being reinstalled in the proper position and press the tube out of the bracket.

To reassemble, reverse the procedure of removal and be careful to replace the fulcrum bracket on the control tube (7), in exactly the same position from which it was removed. It is pressed on.

Adjust the casing anchor bracket before the final tightening of the control wire casing anchor bracket bolt. Proper clearance must be left at the top and bottom for the cable anchor (22).

HANDY SHIFT CONTROL TUBE LOWER BRACKET REMOVING. Remove the steering jacket tube and control tube (7) as outlined under "Handy Shift Control Lever Fulcrum Bracket Removing" steps 1 to 7, inclusive.

Remove the lower bracket clamp bolt and slide off bracket.

To reassemble, reverse procedure of removal and make certain that the control tube compression spring seat (9) is placed in position below the spring (8).

Adjust the wire casing anchor bracket to provide proper clearance at the top and bottom for the wire anchor (22).

HANDY SHIFT CONTROL TUBE TO TRANSMISSION ROD REMOVING. Raise the bonnet and remove clevis pin cotter pin and clevis pin (8, Fig. 246) at the steering gear end of the rod.

Remove the cotter pin and rubber grommet (7) at transmission end of the rod. Slide rod off from shift shaft.

To install, reverse procedure of removal. Check operation of rod and if necessary to adjust, remove the clevis pin and turn clevis (12) until the clevis pin (8) will pass through the clevis and the shift lever (9) with the transmission gears in neutral.

HANDY SHIFT CONTROL LEVER PUSH ROD REMOVING. Remove horn button and steering wheel as given in Steering Gear Section.

Remove upper bracket clamp bolt.

Remove upper bracket (5) and ring (6).

Remove control lever fulcrum (4) control lever (1) and anti-rattle washer (3).

Remove wire anchor (22) at the lower end of the steering column and disconnect wire (17).

Loosen wire casing anchor bracket bolt and detach wire casing anchor bracket (19) from lower bracket.

Pull lower push rod end (14) down far enough to remove the key attaching push rod (12) to push rod end (13).

Remove push rod upper end (13) by taking out key.

Remove upper compression spring (15) and seat (16) with a wire hook.

HANDY SHIFT CONTROL LEVER PUSH ROD INSTALLING. The push rod ends (13) and (14) are assembled to the rod (12) with the keys toward the front of the car.

Apply a coat of viscous chassis lubricant to the push rod ends when assembling them in the control tube.

Install the upper compression spring seat (16) and spring (15) on the push rod (12) and install in control tube (7).

Assemble upper push rod end (13) to push rod (12) with key assembled toward the front of the car.

Install lower push rod end (14) on push rod (12) and assemble with key toward front of car.

Install control lever (1) and anti-rattle washer (3) with end of lever engaged in push rod end (13). Install control lever fulcrum (4).

Install control wire (17) in lower push rod end (14) and install wire anchor (22).

Hold control lever in extreme up position and adjust control wire casing anchor bracket and tighten bolt securely.

Reinstall steering wheel and button (see Steering Gear Section).

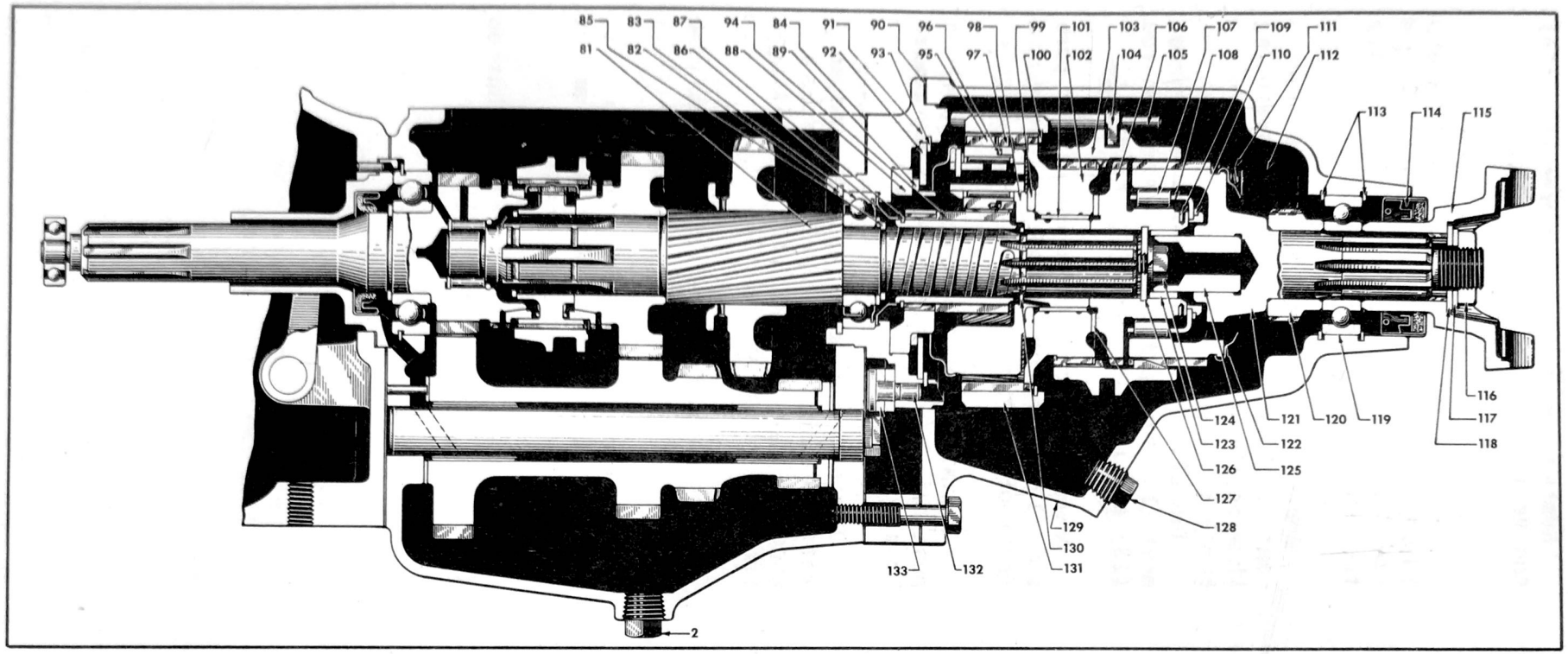

Figure 248 - Transmission Overdrive Section

81. Transmission mainshaft.
82. Transmission mainshaft rear bearing front snap ring.
83. Transmission mainshaft rear bearing.
84. Overdrive to transmission case gasket.
85. Transmission mainshaft snap ring.
86. Transmission mainshaft oil baffle.
87. Stationary gear snap ring.
88. Stationary gear plate.
89. Stationary gear balk ring.
90. Housing gasket.
91. Housing adapter.
92. Pinion cage oil collector ring cover.
93. Pinion cage oil collector ring cover snap ring.
94. Stationary gear.
95. Pinion - wide.
96. Pinion spring.
97. Pinion - narrow.
98. Pinion cage.
99. Clutch hub thrust washer - front.
100. Ring gear snap ring.
101. Clutch hub bushing.
102. Clutch hub.
103. Clutch hub sleeve.
104. Shifter rail fork.
105. Shifter rail fork guide pin.
106. Free wheeling cam.
107. Free wheeling cam roller.
108. Free wheeling cam roller retainer.
109. Free wheeling cam roller retainer spring.
110. Free wheeling cam roller retainer snap ring.
111. Shifter rail retractor spring.
112. Shifter rail.
113. Mainshaft bearing snap ring.
114. Mainshaft oil seal assembly.
115. Companion flange.
116. Companion flange to mainshaft nut.
117. Companion flange to mainshaft lock washer.
118. Companion flange to mainshaft plain washer.
119. Mainshaft bearing.
120. Speedometer gear.
121. Mainshaft assembly.
122. Mainshaft oil collector ring.
123. Mainshaft pilot bushing.
124. Free wheeling cam bolt.
125. Mainshaft pilot.
126. Free wheeling cam retaining washer.
127. Clutch hub thrust washer - rear.
128. Housing drain plug.
129. Housing.
130. Pinion cage retaining snap ring.
131. Ring gear.
132. Interlock lever fulcrum.
133. Interlock lever.

TRANSMISSION OVERDRIVE

The new transmission overdrive which is available only as a factory option has been simplified for improved operation in conjunction with the new synchro-mesh transmission. It also provides for an earlier cut-in speed for greater economy and consequently a lower free wheeling speed on deceleration; cutting out the overdrive and reverting to conventional drive without stopping the car; a new interlock arrangement; a new method of solenoid operation and a new control switch.

Overdrive provides a driving ratio that is over or higher than direct drive. In overdrive the engine revolutions per mile is 72% of the engine speed in direct gear at the same car speed. This reduction is obtained by the use of planetary pinions which rotate on the stationary gear and revolve in the internal tooth ring gear and permits the propeller shaft to rotate 38% faster than the engine. Overdrive operation provides a reduction in wear on engine parts as well as providing greater fuel and oil economy and smoother operation at high speed.

The clutch unit has been redesigned and nearly a dozen fewer parts are used. The parts which have been eliminated are the two clutch pawls which engaged in the slots in the clutch sleeve; the pawl adjusting screws and washers; adjusting screw springs and pawl lock ring. The clutch sleeve is still used but the slots in which the clutch pawls engaged have been eliminated.

The work formerly done by the clutch hub and pawl assembly is now carried on by the new solenoid and stationary gear pawl. This new solenoid and pawl work in the opposite direction to those used in 1940. When the new solenoid is energized it pushes the pawl toward the slots in the stationary gear plate rather than pulling out the pawl as was the practice in 1940.

SWITCHES

Three new switches control the operation of the solenoid. These are the control switch, governor switch and throttle switch. These three switches are connected in series.

CONTROL SWITCH is mounted on top of the control button bracket which is attached to the lower ledge of the instrument panel. With the button pulled out the electrical circuit is cut out. As the button is pushed in the tapered end of the control button shaft raises a plunger in the switch, closing the circuit. The control button also has a mechanical function and this is to move the overdrive control lever backward. This shifts the clutch hub sleeve forward and disengages the front row of internal teeth on the clutch hub sleeve from the external teeth of the free wheeling cam, permitting free wheeling and overdrive operation.

To cut out overdrive and prevent free wheeling the control button must be pulled out. This can now be done at any speed up to 60 miles per hour, whereas in 1940 it was necessary to bring the car to a stop first. The clutch should be disengaged at the same time this is done. A slight clash of gears will be noted but this will have no harmful effect.

As the control button is pulled out the first 3/8" travel opens the control switch and breaks the circuit, thus reverting to direct drive before shifting the clutch hub sleeve.

GOVERNOR SWITCH. The car speed at which the solenoid is energized is determined by a new centrifugal governor switch, which is similar to the Automatic Clutch Control Switch, and is mounted on the right side at the rear end of the overdrive housing and is driven from the speedometer drive gear. The overdrive cut-in speed is now approximately 22 miles per hour on cars equipped with the standard axle ratio for overdrive. When optional gear ratios are used this cut-in speed is proportionately higher. On deceleration free wheeling becomes effective approximately 3 miles per hour below the cut-in speed.

THROTTLE SWITCH. The third switch is the throttle switch which permits reverting to direct drive temporarily when additional

acceleration is required for passing other cars on the highway. This switch is on the left side of the engine and is operated by a plate on the accelerator rod and contacts the plunger in the switch when the accelerator is depressed beyond full throttle position.

INTERLOCK ARRANGEMENT

Another new feature is the interlock arrangement in the overdrive housing adapter which prevents overdrive from engaging when locked in direct drive. Whenever the clutch hub sleeve is pulled back either by pulling the control button out or shifting into reverse the overdrive shift rail is moved backward, pushing the long interlock plunger out of its slot. This tilts the left end of the interlock lever down, raising the short interlock plunger into the notch in the gear pawl preventing it from engaging in the slots of the stationary gear plate.

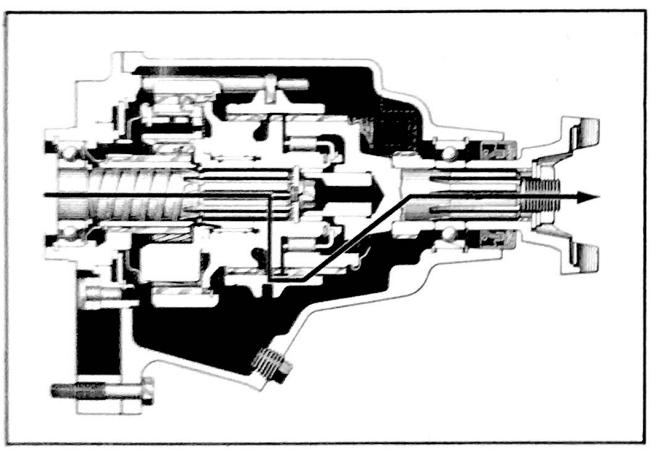

Figure 249 - Overdrive Power Circuit (Direct Drive) Button Pulled Out

OVERDRIVE OPERATION

(a) The operation of the overdrive is controlled by the button located on the instrument panel. When this button is pulled out the course of drive is from-

1. Transmission main shaft to the -
2. Free wheeling cam to the -
3. Clutch hub sleeve to the -
4. Overdrive main shaft and then through the propeller shaft to the rear axle and wheels.

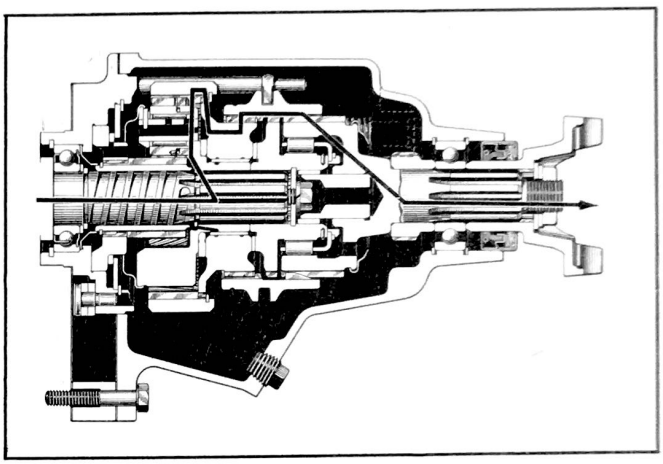

Figure 250 - Overdrive Power Circuit (Overdrive)

(b) Now with the control button pushed in, both overdrive and free wheeling become operative, the overdrive cutting in when the accelerator is momentarily released above about 22 miles per hour. The stationary gear pawl is engaged in the slots in the gear plate and the course of drive is through -

1. Transmission main shaft to the -
2. Pinion cage and pinions to the -
3. Ring gear to the -
4. Clutch hub to the -
5. Clutch hub sleeve to the -
6. Overdrive main shaft and then through the propeller shaft to the rear axle and wheels.

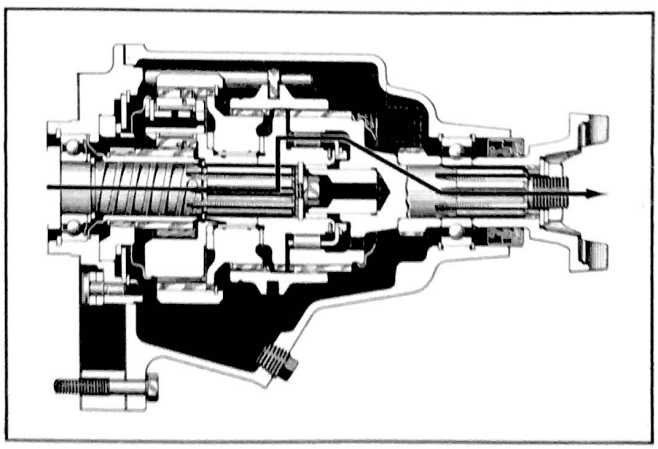

Figure 251 - Overdrive Power Circuit (Free Wheeling)

(c) With the control button pushed in and car operating below the cut-in speed the car is being driven through free wheeling. The course of power is from -

1. Transmission main shaft to the -
2. Free wheeling cam to the -
3. Free wheeling cam rollers to the -
4. Overdrive main shaft and then through the propeller shaft to the rear axle and wheels.

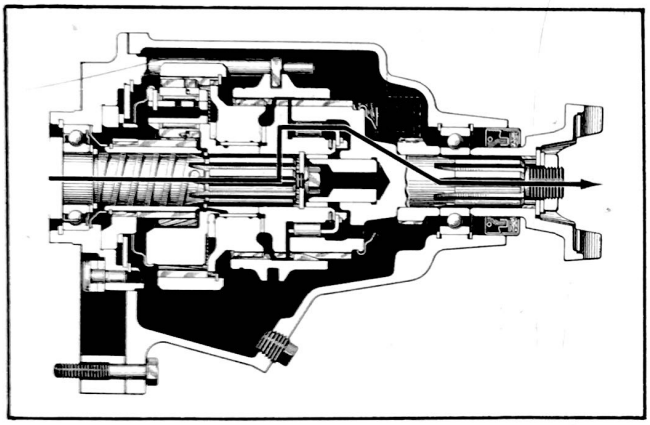

Figure 252 - Overdrive Power Circuit (Step-down)

(d) When the overdrive is to be cut out temporarily for fast acceleration, for passing other cars by depressing the accelerator fully beyond wide-open throttle position, the solenoid circuit is opened and the gear pawl released from the slots in the gear plate. The course of drive is the same as before from -

1. Transmission main shaft to the -
2. Free wheeling cam to the -
3. Free wheeling cam rollers to the -
4. Overdrive main shaft and then through the propeller shaft to the rear axle and wheels.

SOLENOID AND CLUTCH PAWL OPERATION

When the car is stationary or operating below the cut-in speed the gear pawl is held in the "out" position by a spring in the solenoid. As the car reaches the cut-in speed and the solenoid is energized the pawl is pushed in and engaged with the notch in the ball ring.

When the engagement is completed the main closing coil in the solenoid is automatically cut out and the small holding coil is energized. This remains energized as long as the car is in overdrive, but requires only a small amount of current. This happens as soon as the pawl moves in against the balk ring.

Then as the accelerator is momentarily released to permit the engine to slow down to the overdrive speed, the stationary gear rotates in the opposite direction carrying the balk ring with it, allowing the gear pawl to engage in the slot in the gear plate. As engagement is made the stationary gear stops rotating, transferring the drive through the overdrive unit.

When the accelerator is depressed beyond the wide-open throttle position, the throttle siwtch is opened, which breaks the solenoid holding coil circuit. This permits the solenoid plunger spring to exert a force tending to withdraw the gear pawl. The load on the pawl, due to engine torque, however, prevents the pawl from disengaging the gear plate. The ignition is also interrupted momentarily by the circuit being broken through the solenoid relay. As the engine torque is released by the momentary interruption of the ignition circuit, the solenoid springs pull the gear pawl out of the slot in the stationary gear plate. This releases the gear plate and permits the stationary gear to rotate freely for direct drive.

As long as the throttle switch is held open the overdrive electrical circuit is open. When the accelerator is released sufficiently to close the throttle switch the circuit is again closed. The solenoid coils are energized and the solenoid plunger compresses the pawl rod spring. When this action is completed the closing coil circuit is broken and the holding coil remains energized which is sufficient to tends to engage the gear pawl, but it will be stopped by the balk ring.

Overdrive can now be restored by momentarily releasing the accelerator pedal above the cut-in speed. When the engine

slows down to overdrive speed, the stationary gear will reverse its rotation carrying the balk ring with it, allowing the gear pawl to engage with the slot in the gear plate.

The complete solenoid operation is so rapid and the ignition is interrupted for so short an interval, only two or three explosions, that it is hardly apparent to the operator.

CLUTCH HUB SLEEVE

The clutch hub sleeve (103) Fig. 248, which has two sets of internal teeth slides back and forth. Its movement is controlled by the button on the instrument panel which is connected to a control lever on the left side of the overdrive housing. This lever actuates a shaft and lever which moves against a shifter fork (104) which rides in the external groove of the sleeve.

The rear set of internal teeth (103) of the sleeve is constantly in mesh with the external teeth of the overdrive main shaft (121). When the control button is out, the sleeve is in the rearward position which meshes the front row of internal teeth (103) with the external teeth of the free wheeling cam (106). When the sleeve is in this position it locks the free wheeling cam with the overdrive main shaft causing all three parts to rotate together, thereby preventing free wheeling and overdrive.

When the control button is pushed in, the sleeve is moved forward disengaging the front row of internal teeth from the free wheeling cam, permitting free wheeling and overdrive.

OVERDRIVE OPERATING INSTRUCTIONS

We have covered fully the functions of the overdrive and the following is a resume of the operating instructions:

1. With car standing or in operation push in control button.

2. At above approximately 22 miles per hour release the accelerator pedal momentarily and resume normal operation in overdrive.

3. To pass other cars depress the accelerator pedal beyond full throttle position.

4. To revert back into overdrive, again release the accelerator pedal momentarily as before and resume normal operation in overdrive.

5. To cut out overdrive in hilly country or on slippery pavement or whenever overdrive and free wheeling is not desired, depress clutch pedal and pull out control button at the same time. This must be done when car is in motion but not above 60 miles per hour.

DISASSEMBLING OVERDRIVE.

1. Remove six bolts attaching clutch housing to transmission case and remove clutch housing.

2. Remove drain plugs (2 and 128), Fig. 248, in bottom of transmission and overdrive and drain out old lubricant.

3. Place transmission and overdrive assembly in Holding Fixture J-1584 and

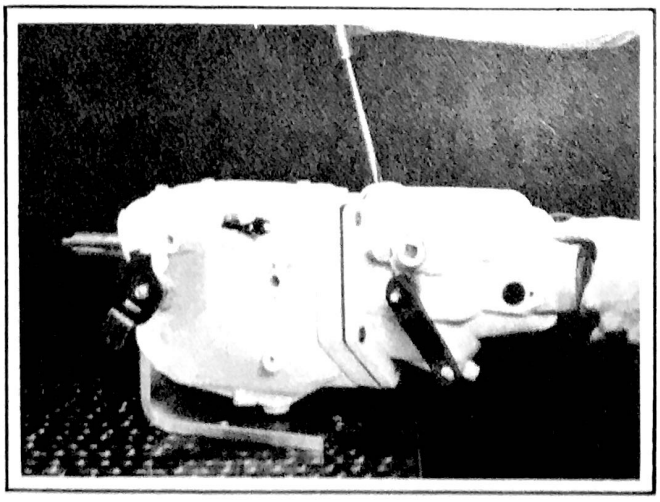

Figure 253 - Separating Overdrive Case at Adapter.

attach securely to fixture using two clutch housing to transmission case bolts. Remove five bolts attaching overdrive housing to transmission case.

4. Holding overdrive steady with one hand, separate overdrive housing from overdrive housing adapter, using a screw driver. Fig. 253.

5. Remove overdrive housing including overdrive main shaft (121), free wheeling cam (106), clutch hub (102, shift sleeve (103) and shifter rail fork guide pin (105). Some free wheel cam rollers (107) will drop into case. Be sure all twelve of them are accounted for.

REMOVING FREE WHEELING CAM REMOVING CLUTCH HUB.

6. Remove free wheeling cam bolt (124), Fig. 248, and cam retaining washer (126) and lock washer from end of overdrive main shaft.

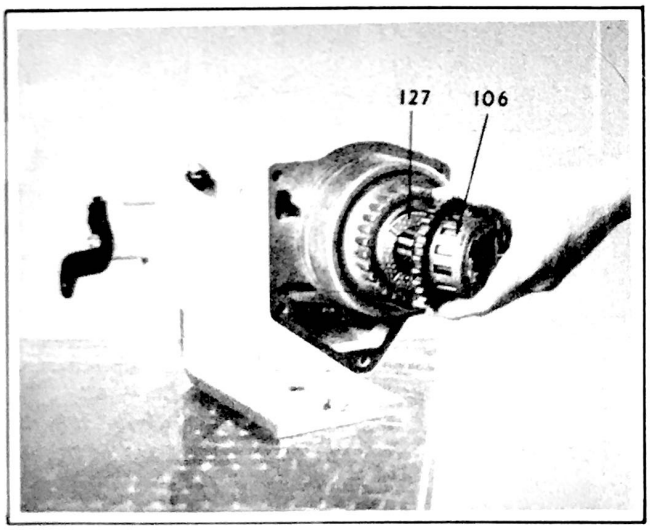

Figure 254 - Removing Free Wheel Cam

7. Slide free wheel cam assembly (106) off main shaft.

8. Slide off clutch hub rear thrust washer (127).

9. Remove clutch hub (102), ring gear (131) and pinion cage assembly (98) as a unit to preclude necessity of rewinding split pinions (95 narrow and 97 wide).

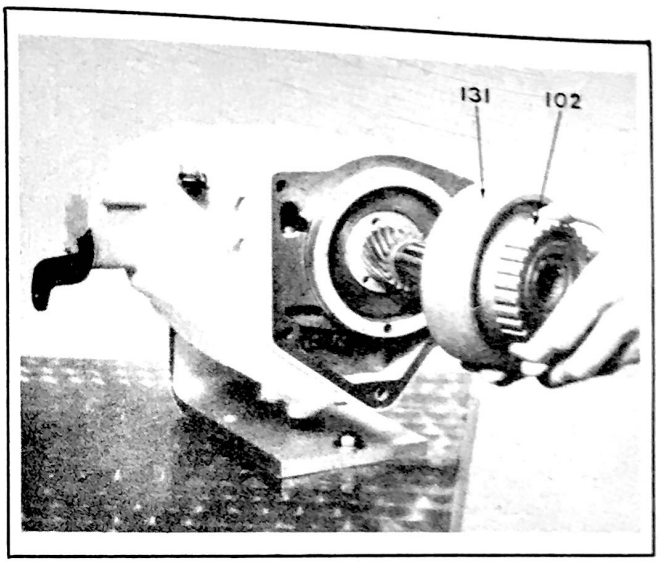

Figure 255 - Removing Clutch Hub

REMOVING MAIN SHAFT LOCK RING REMOVING STATIONARY GEAR.

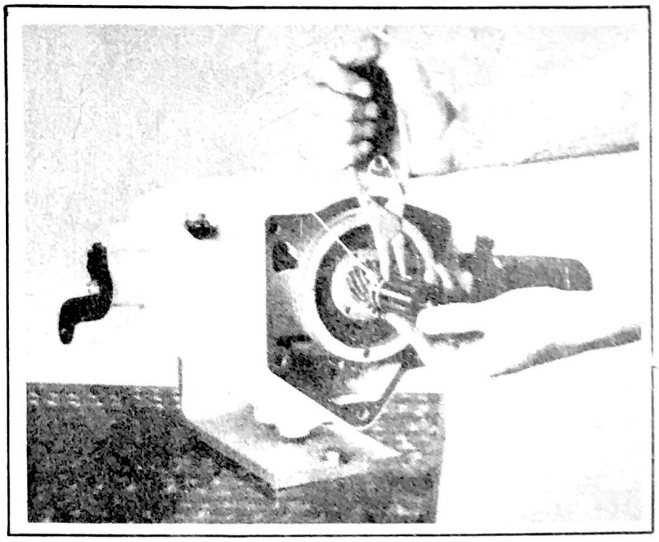

Figure 256 - Removing Pinion Cage Retaining Snap Ring with Pliers J-1575.

10. Remove pinion cage retaining snap ring (130), using Pliers J 1575.

11. Pry out and remove with a screw driver pinion cage oil collector ring cover snap ring (93) and slide off oil collector ring cover (92).

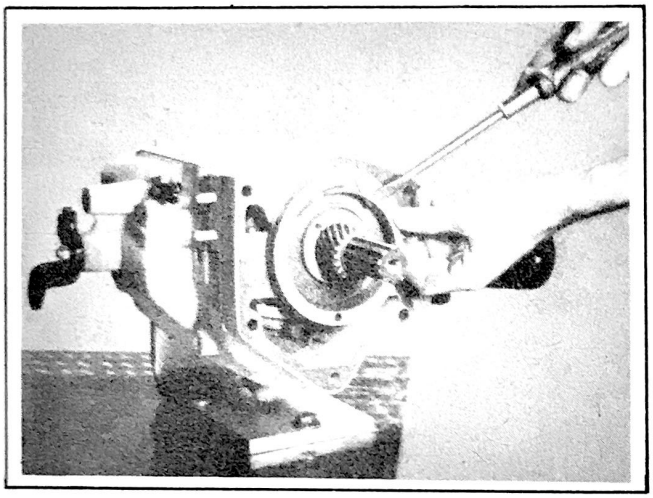

Figure 257 - Removing Pinion Cage Oil Collector Ring Cover Snap Ring

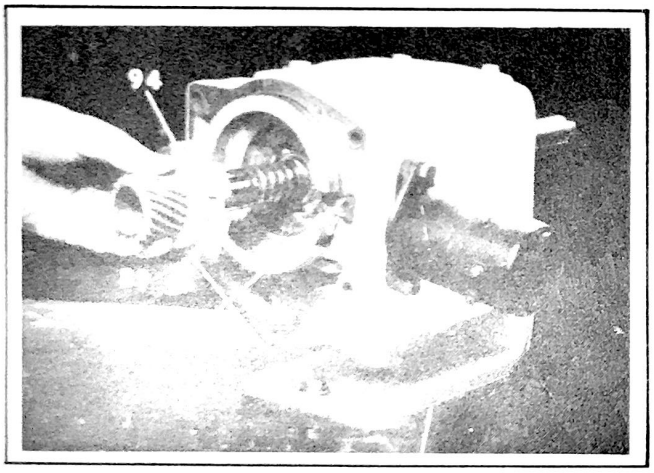

Figure 258 - Removing Stationary Gear Assembly

12. Slide off stationary gear assembly (94), Fig. 248.

REMOVING SHIFT RAILS AND FORKS

13. Remove transmission cover cap screws (59), Fig. 248, and lift off cover (57) cautiously to prevent shift rail lock ball spring (79) from jumping out. Remove spring and lock ball (47) by tilting case on its side.

14. Flush out and thoroughly clean inside of case and gears.

15. Remove low and reverse shift fork lock screw and reverse shifter lock screw with screw driver.

16. Slide shift rail (44) out of front of case. Remove low and reverse shift fork (51) and reverse shifter (52) from case.

17. Remove shift rail interlock (46) by tilting transmission on its side.

18. Remove second and high shift fork set screw driver.

19. Slide second end high shift rail (45) out of case. Remove shift fork (49) from case.

REMOVING TRANSMISSION MAIN SHAFT AND GEARS.

20. Grasp transmission main shaft (81) and pull it out of pocket of transmission main drive gear (10) far enough to expose main shaft synchronizer shift sleeve hub lock ring (27).

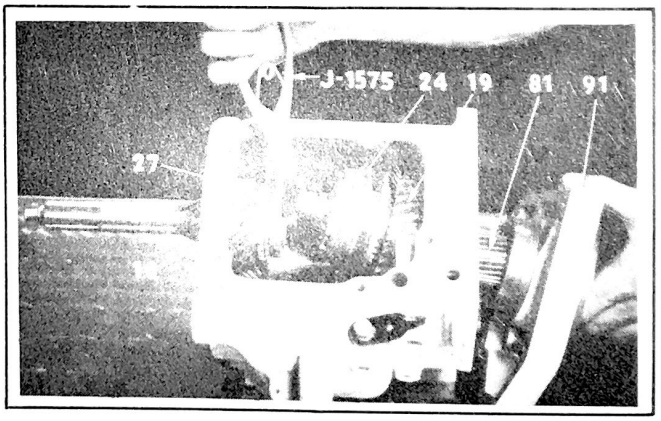

Figure 259 - Removing Main Shaft Snap Ring with Pliers J 1575

21. Remove lock ring with Pliers J 1575.

22. Slide off the main shaft in the order given - synchronizer shift sleeve assembly (24), intermediate gear (19) and low and reverse gear (20) and pull out main shaft and overdrive housing adapter (91).

DISASSEMBLING OVERDRIVE CASE.

23. Unscrew governor switch from overdrive case.

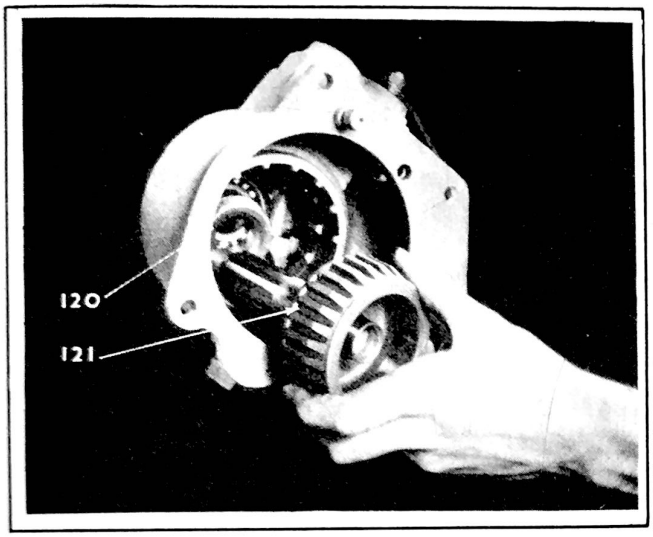

Figure 260 - Removing Main Shaft and Speedometer Gear

24. Remove companion flange nut (116), lock washer (17), plain washer and companion flange (115). If flange is tight on main shaft remove it with Puller J 820.

25. Pull overdrive main shaft (121) out of front of case. Speedometer gear (120) will fall into case.

26. Lift out clutch hub sleeve (103) Fig. 248 and speedometer gear.

27. Remove overdrive main shaft bearing inner snap ring (113) and tap bearing (119) out towards front of case.

28. Tap oil seal (114) out toward rear of case.

REMOVING SHIFTER RAIL FORK.

29. Remove overdrive control shaft nut (134), washers and control lever (135).

30. Remove control shaft set screw (136).

31. Remove control shaft (137).

32. Remove shifter head screw headless plug (138). Insert socket wrench through plug hole and remove shifter head screw (139) and lock washer.

33. Remove shifter rail stop screw (140) and withdraw shifter rial (112), shifter rail retractor spring (111) and shifter rail fork (104).

REASSEMBLING OVERDRIVE CASE.

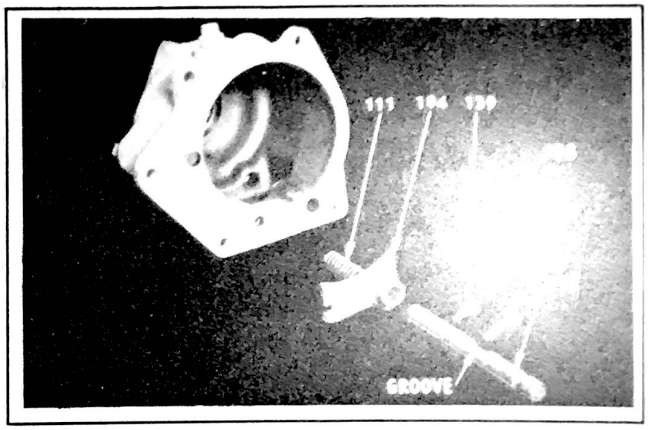

Figure 261 - Shifter Rail - Detail

104. Shifter Rail fork.
111. Shifter Rail retractor spring.
112. Shifter Rail.
138. Shifter head headless plug.
139. Shifter head screw.
140. Shifter Rail stop screw.

34. Place shifter rail retractor spring (111) and shifter rail fork (104) in overdrive case. Install shifter rail (112) in case and assemble it in fork and spring. Be sure wide groove in shifter rail is in line with shifter rail stop screw hole in case.

35. Install shifter rail stop screw (140) and lock washer and shifter head screw (139) and washer and tighten securely. Install shifter head screw headless plug (138).

36. Install new control shaft oil seal (141) and install control shaft (137). Assemble control shaft lever (135), washers and nut (134) and tighten securely. Install shifter rail fork guide pin (105) in case so that it passes through notch in shifter fork (104).

INSTALLING OVERDRIVE MAIN SHAFT IN CASE.

37. Install overdrive main shaft bearing (119), locking it in place with inner snap ring (113).

NOTE: Snap ring is supplied in five different thicknesses. Be sure when replacing it to select one that fits snugly in groove.

38. Install main shaft oil seal assembly (114), leaving it protrude 9/32" from outer edge of case as shown.

39. Assemble clutch hub sleeve (103) in case with shallow groove to front, making sure shifter rail fork groove in sleeve rides on shifter rail fork (104).

40. Place speedometer gear (120), with shoulder facing toward rear, on main shaft (121) and install main shaft in overdrive case.

41. Install companion flange (115), plain washer (118), lock washer (117) and nut (116) and tighten nut only a few turns. This nut should be tightened securely after overdrive case is assembled to transmission case.

OVERDRIVE HOUSING ADAPTER ASSEMBLY.

To Disassemble:

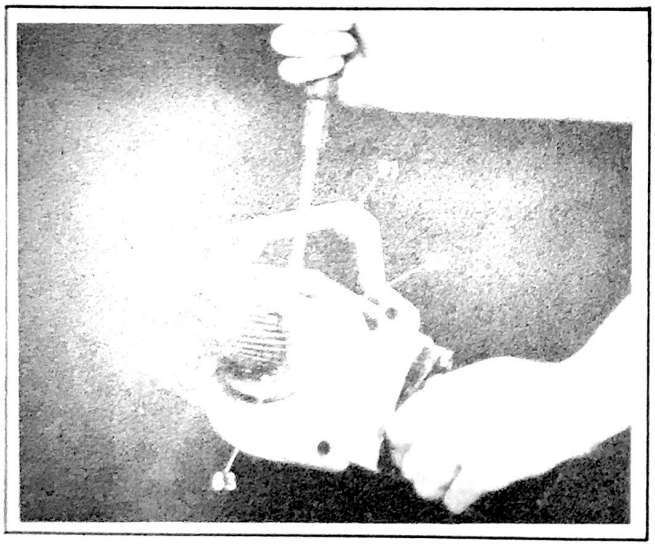

Figure 262 - Removing Main Shaft Rear Bearing Snap Ring

42. Remove transmission main shaft rear bearing snap ring (82) with a screw driver and withdraw main shaft (81) and bearing (83) from housing adapter (91).

43. Remove solenoid (142), solenoid base (144) and stationary gear pawl (146), by removing two solenoid base to adapter bolts (147).

To Reassemble:

44. To replace interlock lever (133) drive out interlock lever fulcrum (132), also expansion plugs in adapter above long interlock plunger (148) and below short interlock plunger (149) and remove plungers.

NOTE: Interlock lever plunger - long (148) is supplied in five different lengths.

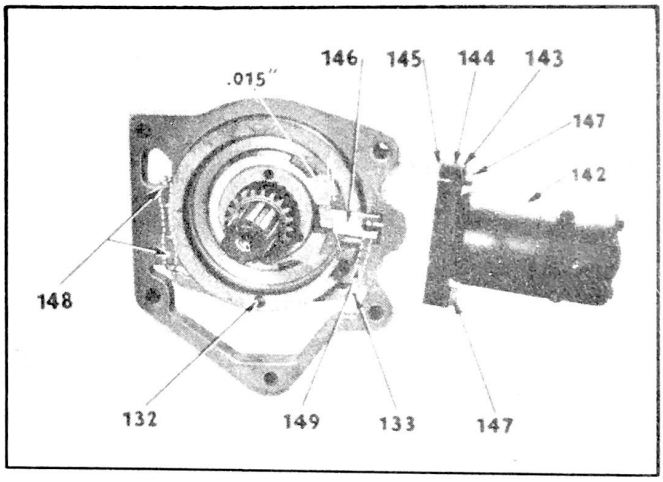

Figure 263 - Interlock Lever and Toggle Arrangement

132. Interlock lever fulcrum.
133. Interlock lever.
142. Solenoid.
143. Solenoid gasket.
144. Solenoid base.
145. Solenoid base gasket.
146. Stationary gear pawl.
147. Solenoid base to adapter bolt.
148. Interlock plunger - long.
149. Interlock plunger.

Select a long one to maintain .008" to .021" clearance between lower end of plunger (149) and tip of interlock lever (133) with long plunger in shifter rail groove and top of short plunger (149) against side of pawl (146). Plungers must work freely.

NOTE: This is important to properly lock out reverse gear.

Place interlock lever (133) in position as shown and install fulcrum (132).

45. Install solenoid base gasket (145), solenoid base (144), solenoid gasket (143), solenoid (142), stationary gear pawl (146) and two bolts (147) and tighten securely. With pawl out to the maximum travel of solenoid, a clearance of .015" must be maintained between end of pawl and balk ring as shown in inset. Shim if necessary to maintain clearance using not more than a total of two solenoid gaskets (143).

46. Install main shaft (00), bearing (00) and oil baffle (00) in adapter and replace snap ring (00).

FREE WHEELING CAM ASSEMBLY.

To Disassemble:

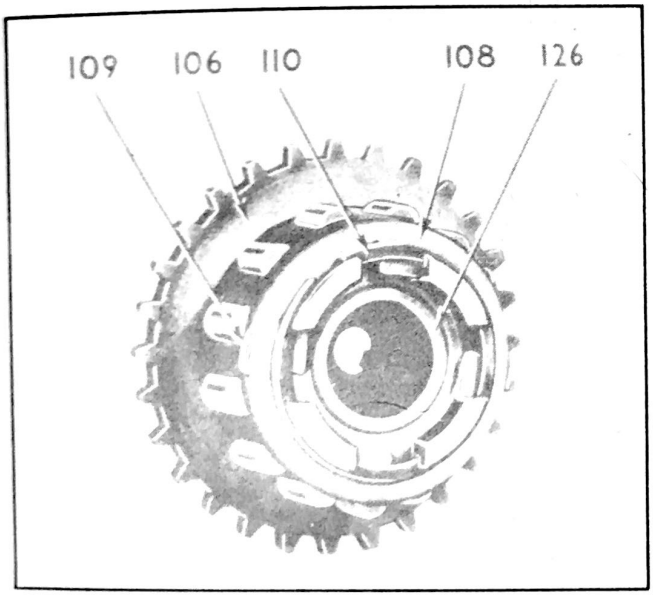

Figure 264 - Removing Free Wheel Cam Roller Retainer

47. Remove cam roller retainer snap ring (110) from free wheel cam roller retainer (108).

48. Pull roller retainer (108) partly off the cam (106) and with pliers pull the end of one spring (109) out of the retainer of cam (106, then pull the retainer further off the hub and pull the second spring out of the retainer of the cam.

49. Main shaft pilot bushing (126) is a light press fit in the cam and can be replaced separately.

To Reassemble:

50. Insert ends of springs (109) in cam roller retainer (108) so that ends point in a clockwise direction.

51. With small screw driver work spring around hub of cam and insert ends in holes in cam.

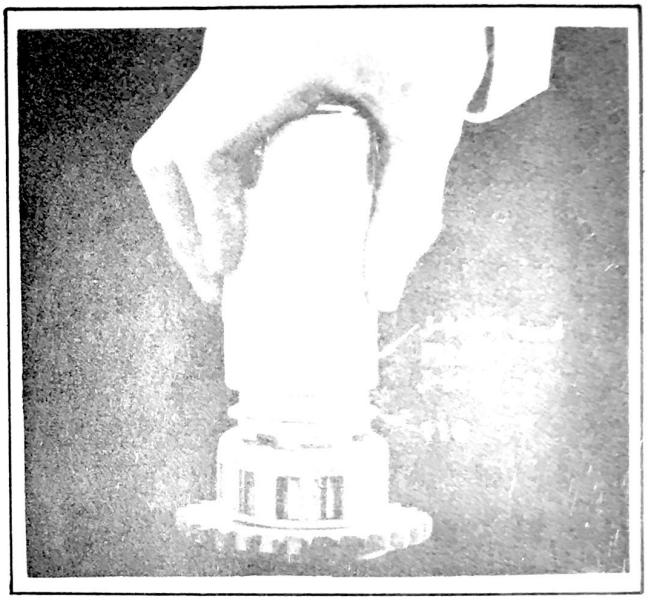

Figure 265 - Replacing Free Wheeling Cam Roller Retainer Snap Ring

52. Replace snap ring (110) using Snap Ring Replacer J 1499 with Pilot J 1499-2.

53. Pack grease into roller retainer (108), Fig. 248 and press rollers (107) into their pockets. To further facilitate holding rollers in their position for assembly into the pocket of the main shaft put a rubber band around outside of rollers.

STATIONARY GEAR AND PLATE ASSEMBLY.

To Disassemble:

54. Remove snap ring from stationary gear plate (88) Fig. 266 and slide gear out of plate.

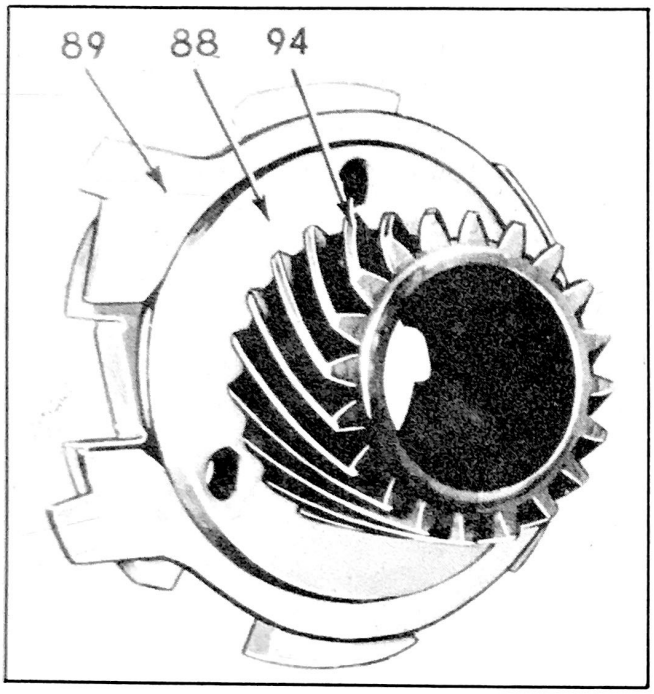

Figure 266 - Stationary Gear and Plate Assembly.

55. The balk ring (89) grips the stationary gear plate (88) so that a pull of 8 to 10 pounds is required to rotate the balk ring on the gear plate.

To Reassemble:

56. Assemble stationary gear (94) in plate (88) so that the two oil slots in gear plate align with the two oil slots in the gear.

57. Replace snap ring in groove in stationary gear plate (88), using Snap Ring Pliers J 1575.

CLUTCH HUB ASSEMBLY.

To Disassemble:

58. Pull pinion cage assembly (including split pinions) out of ring gear (131).

59. Remove ring gear snap ring (100) with a screw driver and withdraw clutch hub (102) from ring gear.

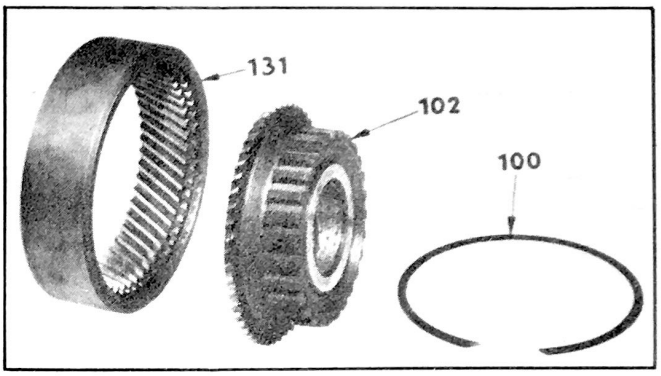

Figure 267 - Clutch Hub Assembly

60. If necessary to replace clutch hub bushing remove and replace it using Bushing Remover and Replacer J 1568.

To Reassemble:

61. Install clutch hub in ring gear (131) and install snap ring (100). Snap rings are supplied in three thicknesses. When replacing be sure it fits snugly in groove.

62. When installing pinion cage assembly it will be necessary to rewind split pinions. This can be done when reassembling clutch hub on main shaft.

INSTALLING TRANSMISSION MAIN SHAFT.

63. Place new overdrive to transmission case gasket (84), Fig. 248, on transmission case.

64. Install transmission main shaft (81) part way in transmission case and install low and reverse gear (20), Fig. 222,with shifter fork groove toward front of shaft. It is important that the four oil holes be lined up with the grooves in main shaft.

65. Slide intermediate gear (19) on main shaft with the tapered side of the hub toward the front of the main shaft.

66. Install synchronizer shift sleeve assembly (24) and two bronze synchronizer rings (25) on the main shaft with the tapered end of the shift sleeve (24) toward the front of the main shaft.

67. Install synchronizer shift sleeve hub lock ring (27) on end of main shaft using Pliers J 1575.

68. Engage front end of main shaft in pocket of main drive gear and press firmly in place.

69. Install second and high shift rail lock ball and spring in transmission case. Place second and high shift fork in position in synchronizer shift sleeve groove and install shift rail and set screw.

70. Install shift rail interlock. Place low and reverse shifter in position behind shift shaft inner lever. Also place low and reverse shift fork in position, install shift rail and shift fork and shifter set screws.

INSTALLING PINION CAGE ASSEMBLY, CLUTCH HUB ASSEMBLY AND FREE WHEEL CAM ASSEMBLY.

71. Install stationary gear (94), Fig. 248, on main shaft and engage gear pawl (146) Fig. 263 in balk ring (89) Fig. 248 opening. Install oil collector ring cover (92) Fig. 248 and oil collector ring cover snap ring (93).

72. Install pinion cage retaining snap ring (130) on main shaft using Snap Ring Replacer J 1499 with Pilot J 1499-3 threaded into main shaft.

73. Install pinion cage assembly (98) Fig. 248 and clutch hub front thrust washer (99) with lip on washer engaged in cut out in pinion cage on stationary gear (94). Coat thrust washer faces with grease.

74. Place a screw driver or wedge between low and reverse gear and transmission case to lock gears. Also place a punch or wedge through opening in pinion cage assembly as shown. Install ring gear (131) on narrow pinions (97) and wind ring gear clockwise so that teeth of narrow pinions pass 1-1/2 teeth of wide pinions (95) or until marked pinion teeth line up, then push ring gear onto wide pinions. Remove wedges.

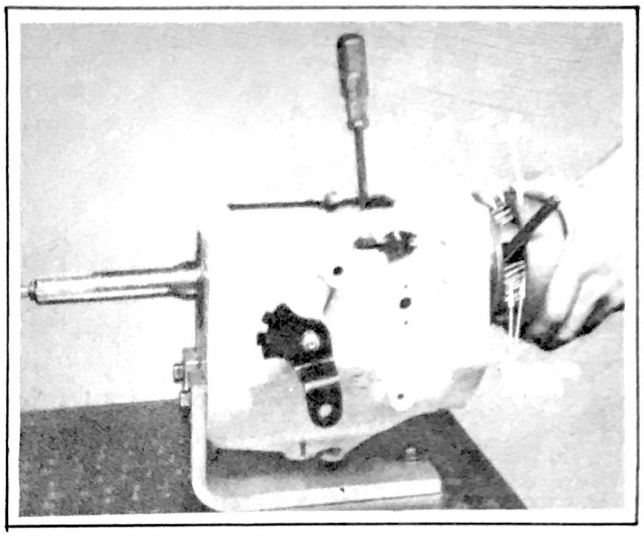

Figure 268 - Winding Pinions

75. Coat both faces of clutch hub rear thrust washer (127) Fig. 248 with grease and place it on front face of free wheel cam assembly. Place free wheel cam assembly (106) on main shift.

76. Grease roller pockets of cam roller retainer (108) and place rollers (107) in position (there are 12 rollers) and hold them in place with a rubber band. (Rubber band will dissolve in grease.)

77. Install free wheel cam retaining washer (126) and bolt (125) and lock washer.

INSTALLING OVERDRIVE CASE ASSEMBLY.

78. Install new overdrive housing adapter gasket (90), Fig. 248.

Move control lever (135) to forward position, hold overdrive case at slight angle, turn companion flange sharply counterclockwise while pushing case forward into position against adapter, so that free wheel cam rollers enter pocket in overdrive main shaft.

79. Insert J 1597 Overdrive Aligning Pilot in lower hole of overdrive case, adapter and transmission case. This is essential for proper alignment of overdrive case to adapter to permit free movement of interlock lever (133) and interlock plungers (148 and 194), Fig. 263.

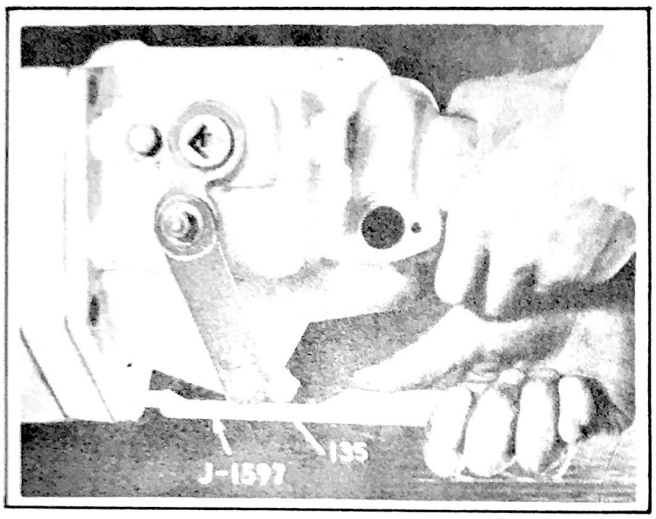

Figure 269 - Aligning Overdrive

80. After proper alignment has been secured install four of the five overdrive case to transmission case bolts and draw up snugly. Remove pilot and install remaining bolt.

81. Install new clutch housing gasket, clutch housing and tighten six bolts securely.

82. Push main shaft (121) as far forward as possible and tighten companion flange nut (116) securely.

83. Fill transmission and overdrive unit with proper amount of required lubricant. A total of 3-1/4 pounds is required - 2 pounds for transmission and 1-1/4 pounds for overdrive unit. Install low and reverse shift rail lock ball (47), Fig. 222, lock ball spring (48), cover gasket (58), cover (57) and cap screw and washers.

OVERDRIVE THROTTLE SWITCH. The over drive throttle switch should operate only when the accelerator is depressed beyond wide open throttle. This adjustment should be made so that when the accelerator is depressed to wide open throttle, the contact washer (C) should just be making contact with the switch plunger.

Adjust nut (A) and (B) back or forth as required. The carburator air cleaner should be removed so that the exact position

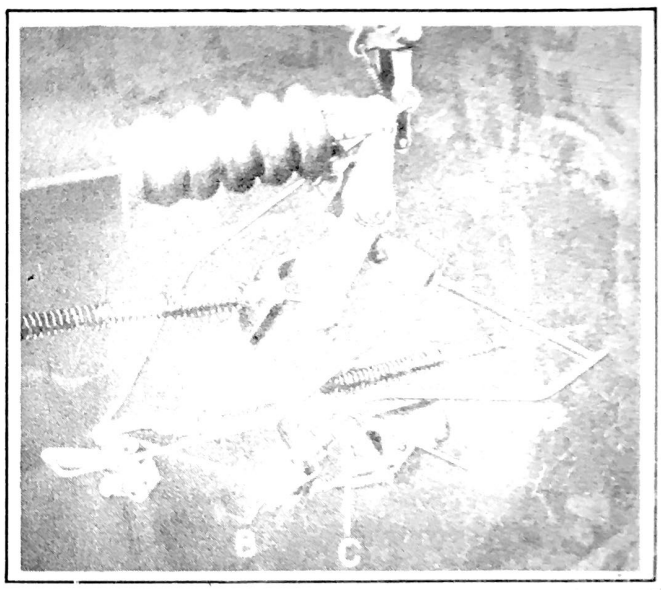

Figure 270 - Linkage Adjustments

of the throttle valve may be observed. With the valvein the wide open position adjust contact washer by means of adjusting nuts (A) and (B) until proper position of washer is obtained.

This adjustment will allow cperation of the car with wide open throttle and at the same time, complete the electrical circuit for shifting from overdrive to conventional drive by pressing the accelerator beyond wide open throttle position.

CONTROL WIRE ADJUSTMENT. The overdrive control wire is adjustable for length at the control lever (135) Fig. 269 on the left side of overdrive housing. The wire at the binding screw should be released and the control lever on the housing moved back as far as possible. With the lever in this position the overdrive unit is in the engaged position. Move control button in as far as it will go and then pull out approximately 1/8". This clearance must be maintained between the end of the button and the control wire casing bracket when the binding screw is tightened to insure full engagement of the clutch hub sleeve.

Now move overdrive contact lever forward just until a resistance is met. Tighten binding screw securely.

REFERENCES

SOURCE OF INFORMATION	DATE	SUBJECT

REAR AXLE

SPECIFICATIONS

Type	Semi floating
Gear Type	Helical bevel
Pinion Bearings	
Type	Taper Roller
Adjustment	Shim
End Play	.000"--.001"
Differential Bearings	
Type	Taper Roller
Adjustment	Adjustment Nut
Wheel Bearings	
Type	Taper Roller
Adjustment	Shim
End Play	.002"--.004"
Pinion and Gear (Matched Gears)	
Adjustment	Shim
Lash in Gears	.0005"--.0035"
Lubrication	
Type--Summer and Winter	S.A.E. 90 E.P.
Capacity in Lbs.	2-3/4 lbs. (1.24 Kgs).

GEAR RATIOS (WITHOUT OVERDRIVE)

	4-1/9	4-5/9	4-7/8
Model 10 Pass. Cars	Opt.	Std.	Opt.
Model 10 Commercial	Opt.	Std.	Opt.
Model 11 Pass.	Std.	Opt.	-----
Model 17	Std.	Opt.	-----
Model 12, 14, 15	Std.	Opt.	-----
Model 18, 5 Pass. Sedan	Std.	Opt.	-----
Model 18, 7 Pass. Sedan	Std.	Opt.	-----
Model 18 Commercial	-----	Std.	-----

GEAR RATIOS (WITH OVERDRIVE)

	4-1/9	4-5/9	4-7/8
Model 10 Pass. Cars	Opt.	Opt.	Std.
Model 10 Commercial	Opt.	Opt.	Std.
Model 11 Pass.	Opt.	Std.	-----
Model 12, 17	Opt.	Std.	-----
Model 12, 14, 15	Opt.	Std.	-----
Model 18, 5 Pass. Sedan	Opt.	Std.	-----
Model 18, 7 Pass. Sedan	Opt.	Std.	-----
Model 18 Commercial	-----	Opt.	Std.

AXLE SHAFT NUTS. Tighten with torsion wrench .... 95 foot lbs.

DIFFERENTIAL CARRIER NUTS. Tighten with torsion wrench .... 37 foot lbs.

REAR SPRING CLIP NUTS. Tighten with torsion wrench .... 40 foot lbs.

PINION SHAFT NUT. Tighten with torsion wrench ... 200 foot lbs.

REAR AXLE

THE REAR AXLE for all Models is of the semi-floating type having helical cut bevel gears mounted in a pressed steel, banjo type housing. The differential unit is mounted in a malleable iron carrier attached to the axle housing with cap screws. The rear axle unit is made more rigid by having the back cover welded to the housing.

DIFFERENTIAL unit is the two pinion type having the differential housing in two sections fastened with studs and nuts. Differential pinions are bronze bushed and operate on a large diameter journal on which is also mounted the hardened steel spacer to absorb the axle drive shaft end thrust. The differential side gears are splined internally to receive the inner ends of the axle shafts and have large thrust surfaces. Thrust washers are inserted between the differential pinions and gears and the case to reduce thrust wear.

A new differential carrier is used having revised bearing spacing and increased fillets around the oil return hole.

DRIVE GEAR is nickel molybdenum steel and is fastened to the differential case flange by special alloy steel bolts. The entire differential assembly is mounted on two large taper roller bearings which have adjusting cages threaded into the

carrier housing for both bearing adjustment and side mesh of the drive gear teeth with the drive pinion.

DRIVE PINION is forged integral with the pinion shaft and is supported on two adjustable tapered roller bearings. A sleeve or spacer between the two bearings holds them in their correct positions. Adjustment of the pinion bearings is provided for by a shim pack between the sleeve and the front bearing and the fore and aft mesh of the pinion with the drive gear is taken care of by a shim pack between the front face of the pinion and the rear bearing.

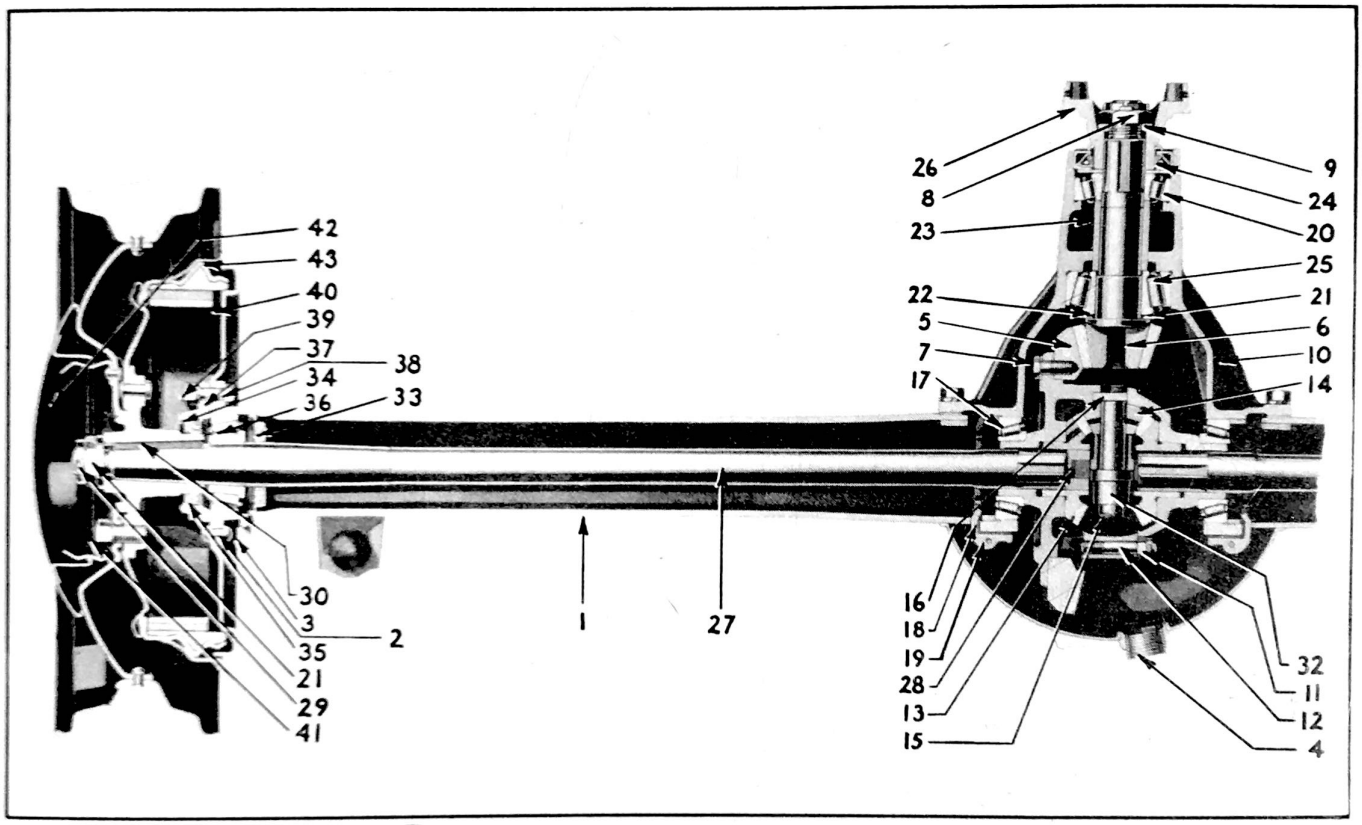

Figure 274 - Rear Axle Assembly

1. Axle housing
2. Housing to backing plate rivet
3. Wheel bearing grease hole plug
4. Drain plug
5. Drive gear
6. Drive pinion
7. Drive gear screw
8. Drive pinion nut
9. Drive pinion washer
10. Differential carrier and cap assy.
11. Differential case stud
12. Differential case stud nut
13. Differential gear
14. Differential pinion
15. Differential pinion shaft
16. Differential shaft locating pin
17. Differential bearing assembly
18. Differential bearing adjusting nut
19. Differential bearing adjusting nut lock
20. Front pinion bearing assembly
21. Pinion rear bearing shim
22. Pinion rear bearing shim retainer
23. Pinion bearing spacer
24. Pinion oil seal
25. Rear pinion bearing assembly
26. Pinion companion flange
27. Drive shaft assembly
28. Drive shaft thrust button
29. Drive shaft nut
30. Drive shaft key
31. Drive shaft nut washer
32. Drive shaft thrust spacer
33. Drive shaft oil seal assembly
34. Wheel bearing adjusting cap assy.
35. Wheel bearing oil seal
36. Wheel bearing assembly
37. Adjusting cap shim
38. Adjusting cap bolt
39. Adjusting cap bolt nut
40. Backing plate assembly
41. Hub bolt
42. Hub cap clip
43. Brake drum seal

UNIVERSAL JOINT FLANGE is on the drive pinion shaft and is held by splines and a large castellated nut. A hydraulic type leather oil seal rides on the flange and prevents pinion shaft oil leaks.

PINION BEARING LUBRICATION is provided by oil thrown up by the drive gear which is forced thru a large passage cast into the housing and then to the bearings. A similar passage at the bottom returns the oil to the main supply as shown in Fig. 276.

AXLE DRIVE SHAFTS are of alloy steel with their large diameter near the outer end where they are taper ground to fit into the wheel bearings. Rear wheel hubs are taper machined being secured to the tapered axle shafts by keys and castellated nuts. Axle shaft end thrust is taken on hardened steel thrust buttons at the inner end of the shafts, contacting the differential spacer.

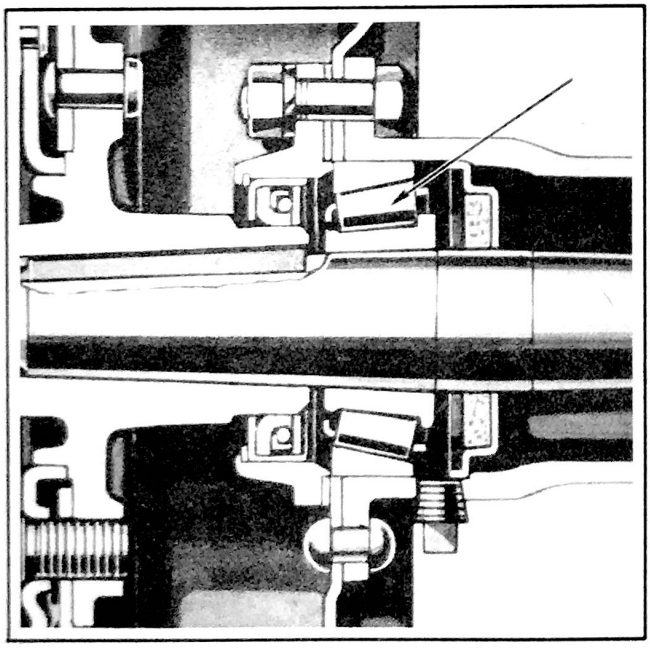

Figure 275
Rear Wheel Bearing and Oil Seal

REAR WHEEL BEARINGS are adjustable tapered rollers with the outer cups seating in the outer ends of the axle housing. Two sizes of bearings are used, Models 10 Traveler, 10 Pass., 10 DL use the smaller bearing and Models 10 CM, 11, 12, 18 use the larger bearing. In cases when the 3" x 5", 6 cyl. engine is used the large wheel bearing is used. Adjustment for end play is by shims inserted between the bearing retaining cups and the housing flange. Leakage of oil onto the brake shoes is prevented by hydraulic type leather oil seals held tight by spring pressure.

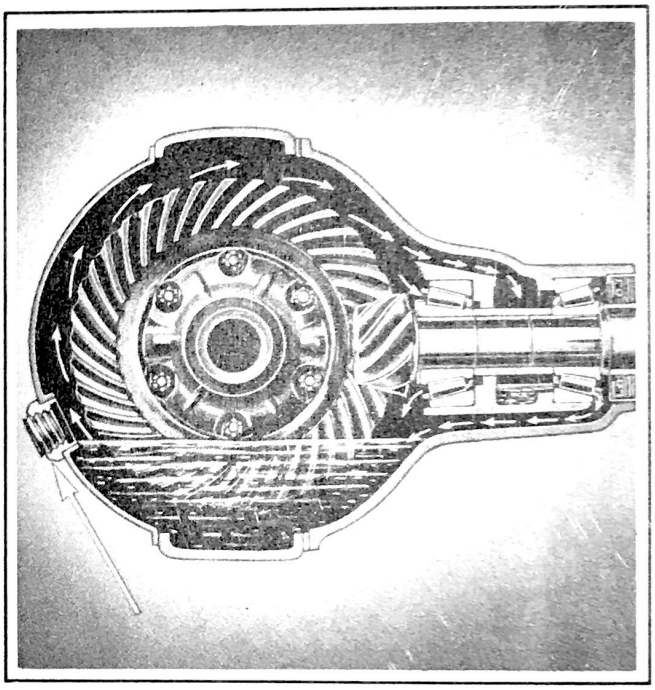

Figure 276 - Circulation of Lubricant in Differential

REAR AXLE LUBRICATION should be checked every 1,000 miles and the lubricant level be kept even with the plug.

The life of the rear axle gears and bearings can be prolonged if the differential is pumped dry of lubricant at the end of the first 5,000 miles of service and then filled with kerosene, the engine started and the kerosene churned by jacking up one wheel. Churn the kerosene for several minutes and then pump the kerosene completely out by having the suction pipe at the lowest point in the banjo housing.

Refill with 2-3/4 pounds of S.A.E. 90 E.P. lubricant for summer or winter use.

DIFFERENTIAL

DIFFERENTIAL CARRIER AND GEAR SET REMOVAL. Remove drain plug (4), Fig. 274.

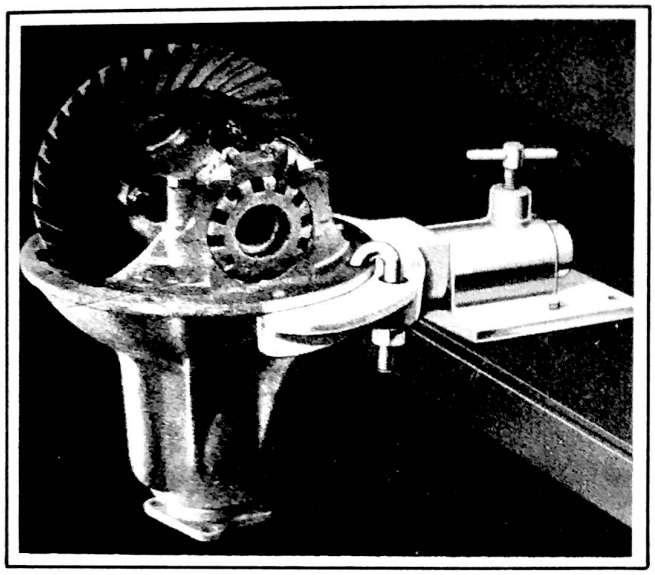

Figure 277
Differential Holding Fixture J-814

Jack up rear of car, remove hub caps and take off the rear wheels.

Remove axle shaft nuts (29, also washers using axle shaft nut wrench J 351.

Remove rear wheel hubs and brake drums from axle shaft using wheel puller tool J 736, Fig. 278.



Figure 278 - Rear Wheel Hub Removing with J-736 Puller

Under no circumstances should a knock-out type of puller be used, as serious and costly damage can be done to the differential parts by this method.

Remove the four nuts (39), Fig. 274, holding the wheel bearing adjusting caps (34) and shims (37). Remove caps.

Remove rear wheel bearings and axle shafts using axle shaft and bearing puller tool J 352, Fig. 279.

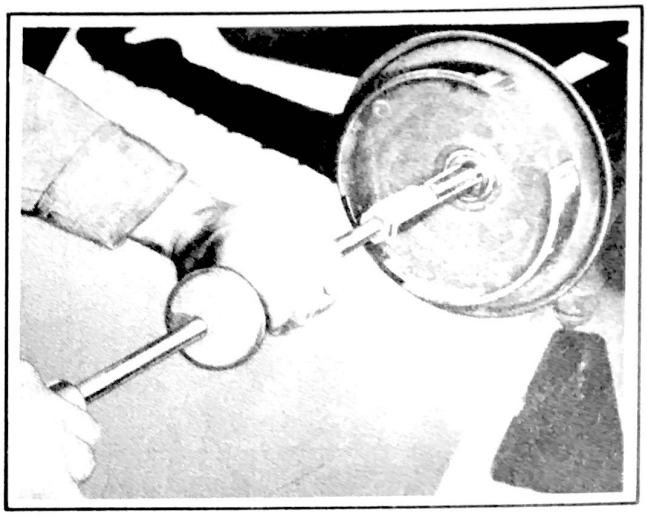

Figure 279 - Rear Axle Shaft and Wheel Bearing Removing with J-352 Puller

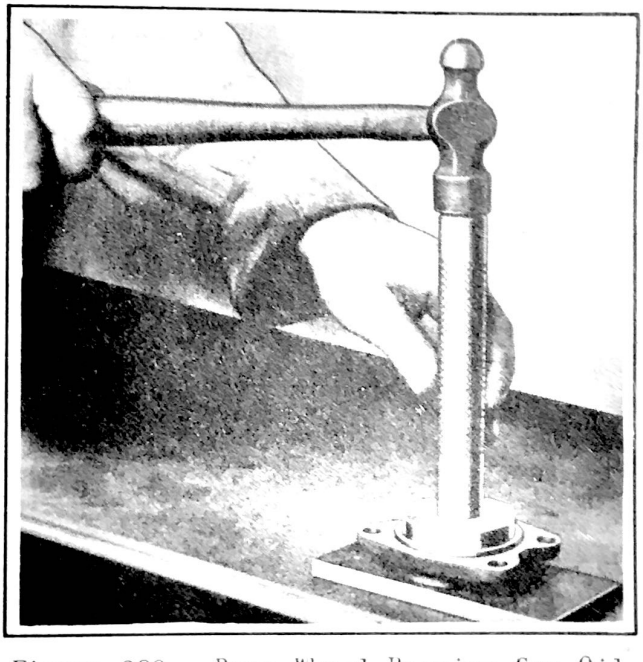

Figure 280 - Rear Wheel Bearing Cap Oil Seal and Pinion Shaft Oil Seal Replacer Tool J-353-1

Remove bearing cap oil seal assembly (35), Fig. 274, and install a new one using tool J 353-1, as shown in Fig. 280.

Remove rear wheel bearing cone and rollers (36) from axle shafts using bearing remover tool J 1301.

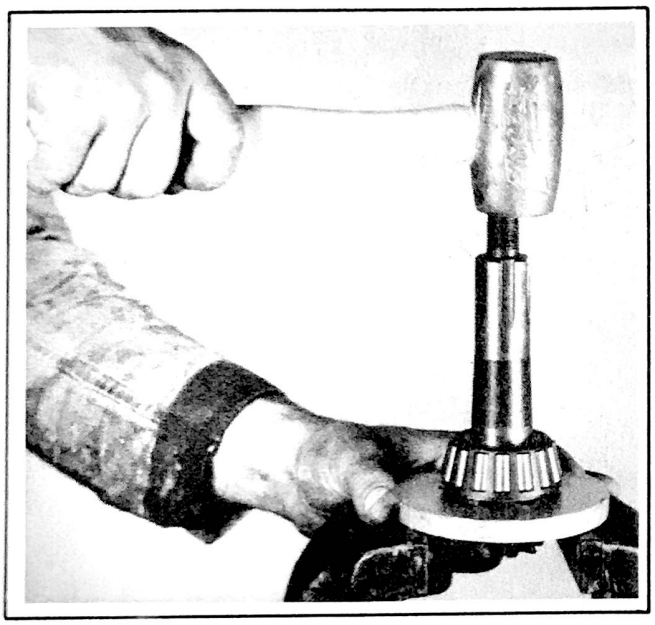

Figure 281 - Rear Pinion Shaft Bearing Remover and Installer Tool J-1301

Remove axle shaft oil seal and retainer (33), Fig. 274, using axle shaft and pinion shaft oil seal remover tool HM 555 as shown in Fig. 282.

Disconnect brake conduits and cables at backing plates.

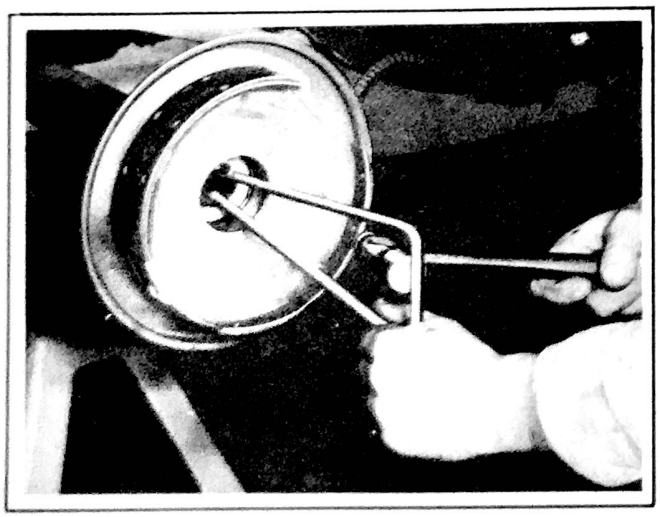

Figure 282 - Axle Shaft and Pinion Shaft Oil Seal Removal Tool HM-555

Disconnect axle tee to rear wheel brake tubes at backing plates.

Disconnect rear wheel cylinder hose at axle tee and remove axle tee.

Remove wheel cylinders and brake shoes.

If backing plates are to be removed, cut rivet heads off with a sharp cold chisel. Install new backing plates and re-rivet to axle housing.

Remove bolts attaching propeller shaft to pinion shaft and drop rear end of propeller shaft.

Remove bolt nuts attaching differential carrier to axle housing and lift out carrier and gear set assembly.

DIFFERENTIAL CARRIER AND GEAR SET INSTALLING IN HOUSING. Examine the differential carrier and gear set thoroughly for dirt, chips, foreign matter of any kind. Damage to gears and bearings from such causes will make costly repairs necessary.

Install a new gasket between the differential carrier and axle housing. Place gasket carefully over the cap screws.

Install differential carrier and gear set and tighten carrier cap screw using lockwashers under all nuts., Check for tightness at the end of first 500 miles.

DIFFERENTIAL DISASSEMBLING. Remove differential bearing cones (17), Fig. 274, from differential case hubs using bearing puller tool J 354-A as shown in Fig. 283. Puller fingers fit in the notches that are in the differential case.

Remove drive gear bolts and lockwashers and take off drive gear (5) Fig. 274.

Remove cotter pins and nuts (12) Fig. 274, from differential case. Separate the right and left cases and this will allow removal of the--

Differential pinion shaft (15)
Differential pinions (14)
Differential gears (13)
Drive shaft thrust spacer (32)
Differential pinion thrust washers.
Differential gear thrust washers.

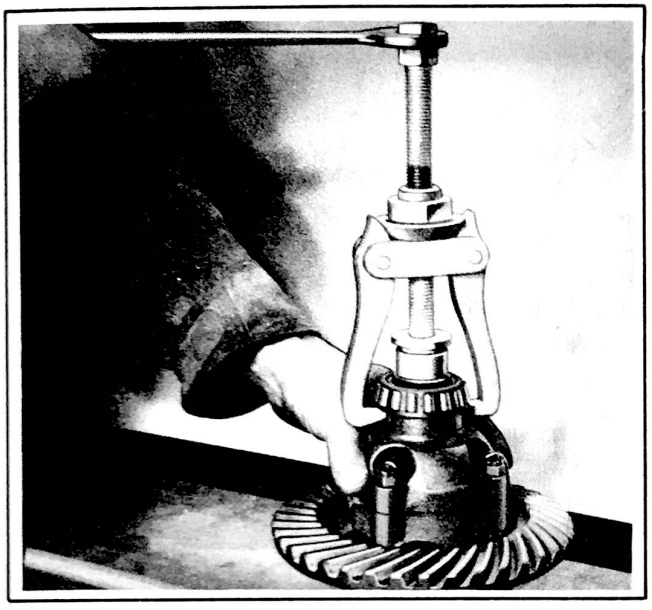

Figure 283 - Differential Bearing Cone and Roller Removing with J-354-A Puller

DIFFERENTIAL REASSEMBLING. Wash all parts in gasoline and inspect for wear, roughness, cracks or fractures.

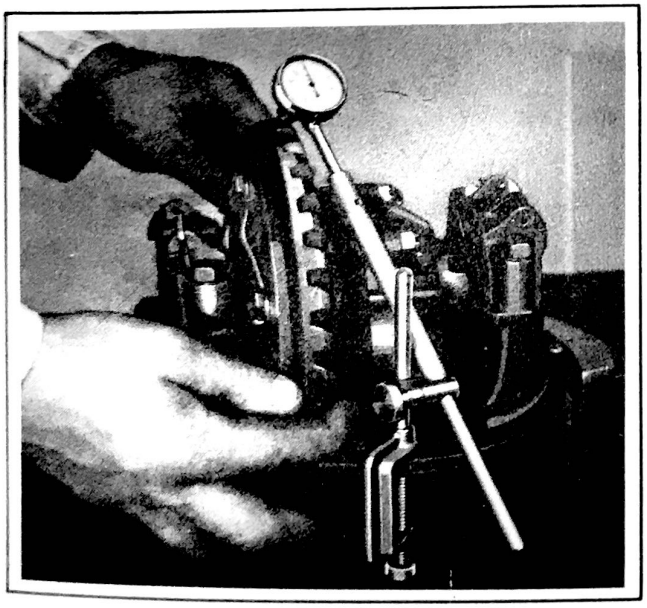

Figure 284 - Drive Gear and Pinion Backlash with J-390 Dial Indicator

Replace any worn parts also any that there is reason to suspect may be damaged.

Check ring gear bolting flange on the differential case for eccentricity and side runout using dial indicator J 390 X and placing hubs of differential case in V blocks. If they do not run true within .002" it will be necessary to true up the flange in a lathe or install a new case assembly.

Place differential gear (13), Fig. 274, and thrust washer in left hand differential case.

Differential gear thrust washers are available in various oversize thicknesses. Select washers that will give no appreciable end play when the unit is reassembled. It is permissable to remove play to the extent that the differential gears can just be turned by hand when grasping the axle shafts. Install washers with rough side next to the differential case and the smooth side in contact with the differential gear.

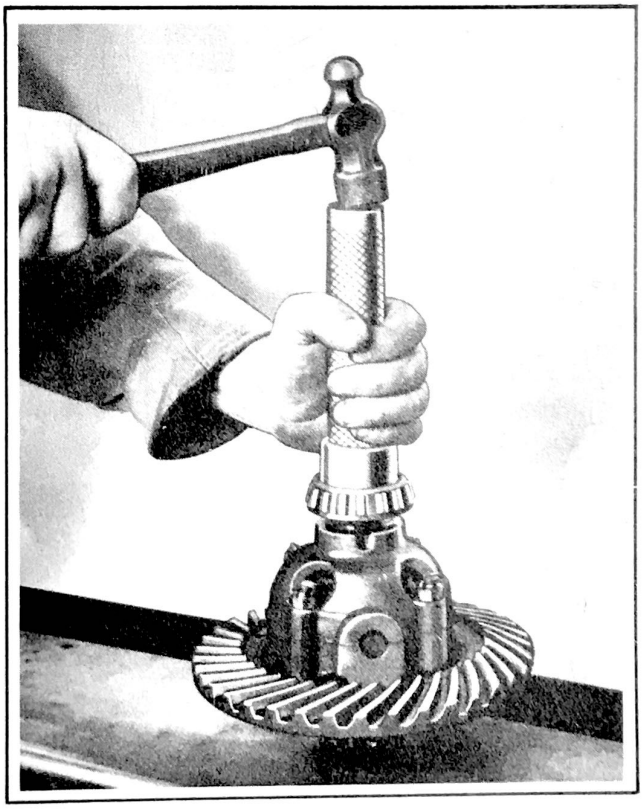

Figure 285 - Differential Bearing-Cone and Roller Installing with J-355 Tool

Assemble differential pinions (14), spacer (32) and thrust washers on the differential pinion shaft (15) and place them in left hand differential case so that the hole in the shaft will line up with the pin (16) in the case.

Install differential gear thrust washer and differential gear in right hand differential case and assemble to left case.

Replace nuts (12) on differential case studs (11) and tighten securely. Insert and spread cotter pins in all studs.

Place drive gear in position on differential case flange so that the holes line up properly. Install lockwashers and bolts and draw bolts up tight.

The drive gear and differential case flange must be free of nicks and burrs and see that no dirt or foreign matter finds its way between the gear or flange or a noisy operation will result.

Install differential bearing cones (17), Fig. 274, on differential case hubs using differential bearing driver tool J 355, as shown in Fig. 285.

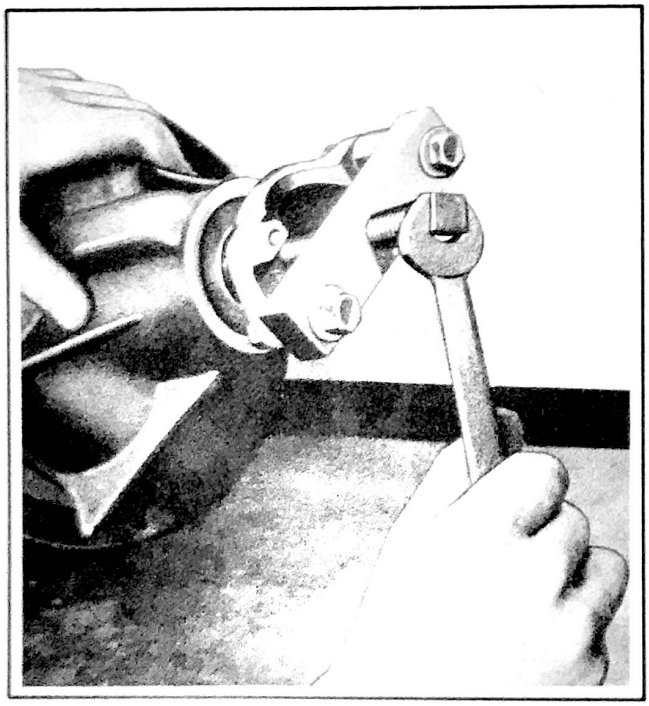

Figure 286 - Pinion Shaft Companion Flange Removal with J-456 Puller

NOTE: Tighten differential carrier nuts with a torsion wrench to 37 foot pounds.

DIFFERENTIAL CARRIER AND GEAR SET DISASSEMBLING. Remove cotter pins from differential bearing adjusting nut locks and take out the locks (19), Fig. 274.

Remove cap screws from differential bearing caps and take off the caps and adjusting nuts. Differential assembly and drive gear can now be removed from carrier.

Remove cotter pin from pinion shaft nut (8) and remove nut, also washer (9).

Remove pinion shaft companion flange (26) using companion flange puller tool J 456, as shown in Fig. 286. Pinion (6) Fig. 274, bearing spacer (23) and shims can now be removed from inside carrier.

Remove rear pinion shaft bearing cone (20), Fig. 274, from pinion shaft using pinion shaft bearing remover tool J 1301 as shown in Fig. 281.

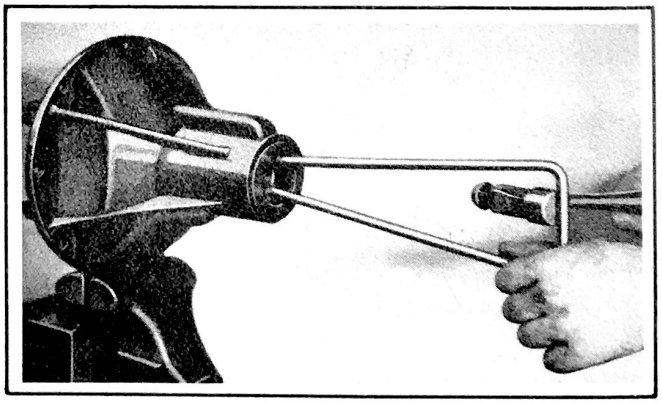

Figure 287 - Pinion Shaft Oil Seal Removing with J-489 Tool

Remove pinion shaft oil seal (24), Fig. 274, from carrier using pinion shaft oil seal puller tool J 489 as shown in Fig. 287. Pinion shaft front bearing cone can now be removed.

Remove front and rear pinion shaft bearing outer cups from carrier using pinion bearing cup remover HM 63 as shown in Fig. 288.

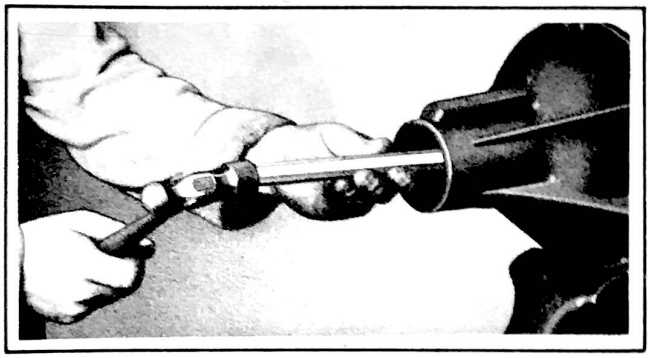

Figure 288 - Front and Rear Pinion Shaft Bearing Cups Removing with HM-64 Tool

PINION AND BEARING ASSEMBLING. Install pinion shaft front and rear bearing cups in carrier using pinion shaft bearing cup replacer tool J 270 H as shown in Fig. 289.

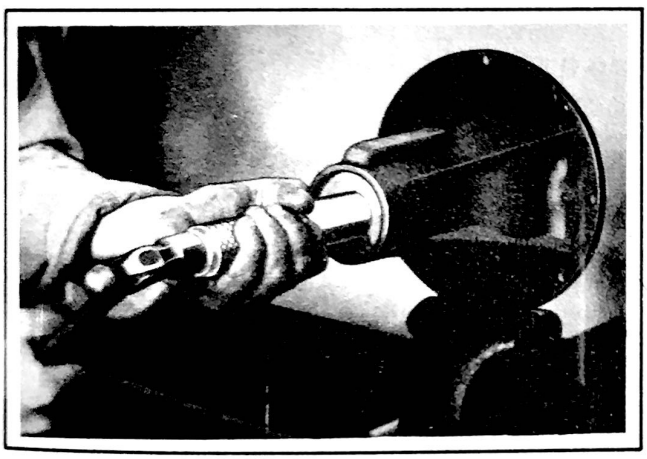

Figure 289 - Pinion Shaft Bearing Cups Installing with J-270-H Tool

Place front pinion bearing cone (20) Fig. 274) in position in cup and install pinion shaft oil seal (24) using *Pinion Shaft Oil Seal Replacer Tool J 353-1* (this tool also is used for the rear wheel bearing cap oil seal).

The oil seal leather must be smooth and not worn thru at the retaining spring.

Install pinion rear bearing shim pack (consists of thin, medium and thick shims) and pinion shaft rear bearing cone (25) on the drive pinion (6) using *Pinion Shaft Bearing Remover and Installer Tool J 1301.*

Use the same number and thickness of shims as were removed when disassembling.

Install the bearing spacer (the 4-7/8 to 1 axle uses a different spacer than is used on the 4-1/9, 4-5/9 to 1). This spacer (23) is placed on the pinion shaft ahead of the rear bearing cone. Place the pinion bearing front adjusting shims (.003", .004" and .015" thick) on the pinion ahead of the spacer.

Install the pinion and assembled parts in position in the carrier, inserting the forward end of the pinion thru the pinion shaft front bearing cone.

Install companion flange (26) on the front end of drive pinion and assemble pinion shaft nut (8) and washer (9). Tighten the nut with a torque wrench to 200 foot pounds using the *flange holding tool J 789* as shown in Fig. 290.

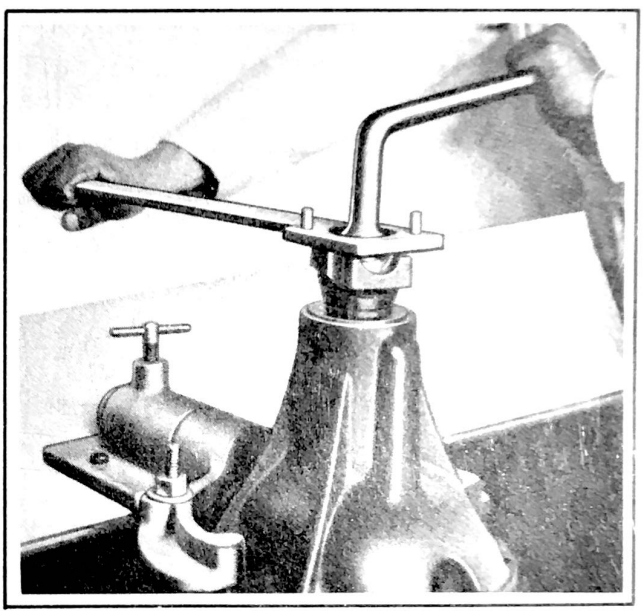

Figure 290 - Pinion Shaft Nut Installing Using Tool J-789 (Use Torque Wrench and Tighten to 200 Foot Pounds)

If the correct number of shims have been used between the pinion shaft front bearing (20) and spacer (23), it should be just possible to turn the pinion shaft with one hand. If the adjustment is tighter than this, add one thin front bearing shim at a time until this hand test is obtained.

Insert cotter pin in the pinion shaft and bend over.

REAR AXLE HOUSING

REAR AXLE HOUSING REMOVING. Jack up rear end of car and place stand jacks under frame side members just ahead of the rear springs. Place roller jack under center of axle housing.

Disconnect rear lateral stabilizer at axle end.

Disconnect rear shock absorbers at lower end.

Remove rear spring clip nuts.

Lower roller jack and remove axle housing from under car.

REAR AXLE HOUSING REINSTALLING. Place axle housing in position on rear springs.

Install spring clips, plates, clip cushions and clip nuts and tighten securely.

Assemble propeller shaft to pinion shaft flange.

Attach shock absorbers to studs.

Attach brake cables and conduits to brake backing plates.

Install brake tube tee in axle housing.

Assemble rear wheel cylinder hose to tee.

Install wheel cylinders and brake shoes.

Assemble rear lateral stabilizer to axle housing.

DRIVE GEAR AND PINION

DRIVE GEAR AND PINION ADJUSTMENT. Install differential and drive gear assembly in the carrier and assemble differential bearing cups and differential bearing adjusting nuts (18), Fig. 274, so that the drive gear and drive pinion teeth bottom.

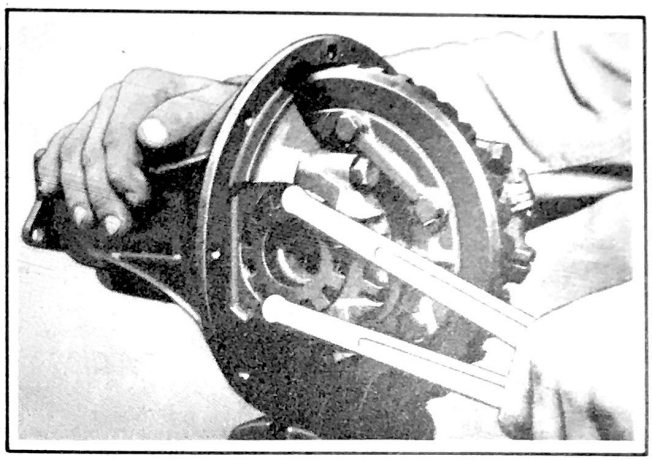

Figure 291 - Differential Bearing Adjusting Nut Wrench J-972

Install differential bearing caps in place and insert cap screws and lockwashers, drawing them up finger tight. Make sure the lockwashers are under the cap screws and are in good condition.

Turn the left hand adjusting nut to right (clockwise) until no play can be felt between drive gear and pinion shaft.

Turn the right hand adjusting nut to right (clockwise) and draw it up tight using Differential Bearing Adjusting Nut Wrench J 972, as shown in Fig. 291.

Mount Dial Indicator J 390-X, Fig. 284, on the differential carrier flange and turn left hand adjusting nut to the left (counterclockwise) one half notch. Turn right hand adjusting nut to the right (clockwise) one half notch.

Rest plunger of dial indicator on the outer edge of the drive gear. Note amount of play or backlash between the drive gear and pinion teeth on the indicator. This backlash should be between .0005" and .0035". If it is not then turn adjusting nuts one half notch at a time until it is obtained.

Tighten left bearing cap screws. Turn right differential bearing adjusting nut to the right (clockwise) one full notch.

This additional tightening provides the necessary "spread" to the differential carrier for proper operation.

Draw up cap screws tightly on right differential bearing cap.

Install differential bearing adjusting nut locks (19) and secure them with cotter pins.

PINION SHAFT OIL SEAL. There have been two types of oil seal used as shown in Fig. 292 "C" and "D". They are installed in the same manner, however, the clearance between the dirt shield (E) and oil washer (B) must be maintained at equal distances. This clearance is to prevent noise between the oil washer which revolves with the pinion shaft and the oil seal which is stationary in the differential housing.

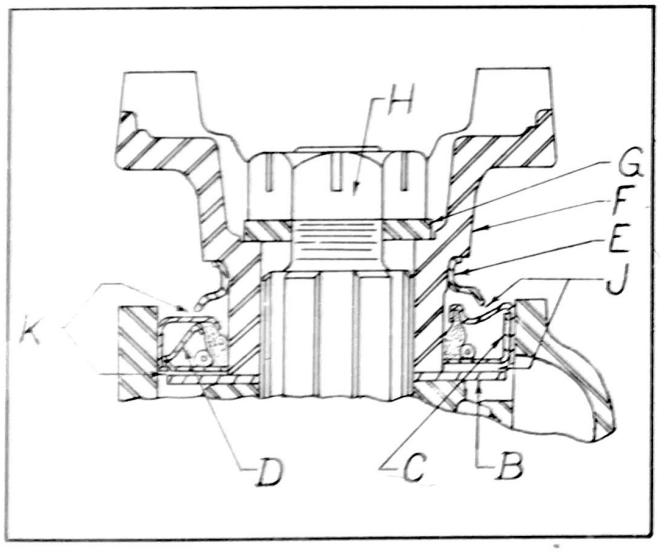

Figure 292 - Pinion Shaft Oil Seals Used
B. Oil washer (travels with shaft)
C & D. Oil seal
E. Oil seal dirt shield
F. Companion flange
G. Plain washer
H. Self-locking nut
K. Clearance between oil seal and oil washer

AXLE SHAFT

AXLE SHAFT REMOVING. Raise the rear end of the car and place on stand jacks.

Remove the rear wheel.

Remove the brake drum and hub using puller J 736.

Remove rear wheel bearing adjusting cap and shim.

Remove rear wheel bearing and axle shaft using puller J 352. (Fig. 279)

Remove rear wheel bearing cone from axle shaft using tool J 1301. (Fig. 281)

AXLE SHAFT REPLACING. Install bearing cone using tool J 1301. (Fig. 281)

Install axle shaft. (See Page 221)

Install bearing cap and oil seal assembly on axle.

Install rear wheel bearing shims and adjust cap.

Adjust end play of axle shaft.

Install brake drum.

Install wheel.

Tighten axle shaft nut with a torsion wrench to 95 foot pounds.

TO RENEW AXLE SHAFT THRUST BUTTON. Grind off thrust button (28), Fig. 274, flush with the end of the shaft on an emery wheel.

Center punch the remainder of the thrust button and drill an 11/32" hole through the center. Tap out the button with a 3/8"-16 tap and screw a 3/8"-16 hexagon cap screw that is 1-1/2" or 2" long into the tapped hole.

Place head of screw in a vise and (using a soft hammer) tap the end of the axle shaft removing the button.

Clean out the hole.

Drive in a new thrust button making certain it is firmly seated in the shaft.

WHEEL BEARING AND AXLE SHAFT INSTALLING. Install axle shaft oil seal assemblies

using oil seal replacer J 353-2. (Fig. 293).

Install rear wheel bearing cone on axle shaft using rear bearing replacer tool J 358-H.

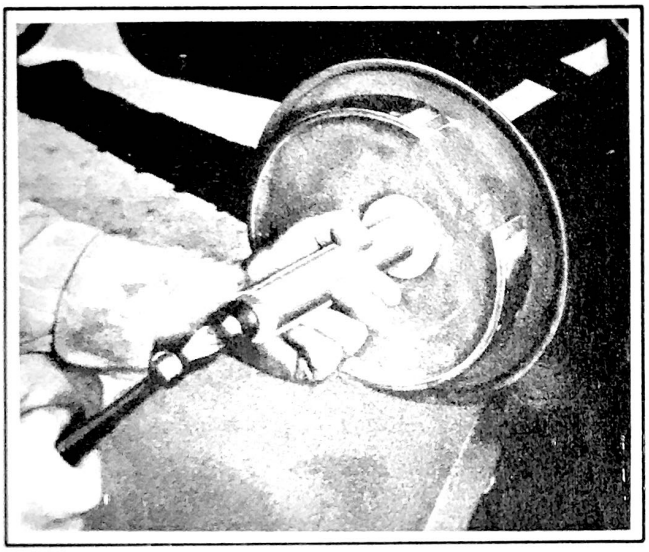

Figure 293 - Axle Shaft Oil Seal Assembly Installing with J-353-2 Tool

Install axle shaft with bearing cone in housing and assemble rear wheel bearing outer cup in axle.

Pack bearings with wheel bearing lubricant.

Install wheel bearing adjusting shims (37), Fig. 274 between adjusting cap (34) and end of housing. Nuts (39) with lockwashers under them should be drawn up tight.

Dial indicator gauge J 390-X should be clamped to brake backing plate so that dial plunger rests against the end of the axle shaft. (Fig. 284).

Check end play which should be from .002" to .004" each wheel.

Adjust end play by removing or adding shims (37), Fig. 274, between the axle housing and bearing adjusting cap (34).

Install axle shaft keys in keyways and rear wheel hubs also brake drums on axle shaft.

Install drive shaft nut washers (31) and nuts (29) on axle shafts and tighten nuts using torque wrench and tighten to 65 foot pounds.

Adjust brake shoes.

Bleed all wheel cylinders.

Replace wheels and tighten wheel hub bolts securely.

Place roller jack under center of axle housing, raise car and remove stand jacks. Apply hand brake and with car in this position apply an extra tightening operation to axle shaft nuts, replace cotter pins and install hub caps.

Fill axle to proper level with S.A.E. 90 E.P. lubricant through filler hole and replace filler plug.

BRINNELLED PINION, DIFFERENTIAL AND PARTICULARLY WHEEL BEARINGS are sometimes the result of railroad or trailer shipping due to vibration during shipment that might cause rollers to dig in or brinnell bearing rollers and races to such an extent as to make the bearing noisy.

Rail or trailer shipments are loaded in such a way that all possible relief from extreme loads is given particularly when cars are being shipped for long distances.

Roller bearings that have dug in or brinnelled will cause a clicking noise.

Assembling and disassembling of bearings should always be done with the special tools designed for that purpose.

J 270 H for pinion bearing cup installing.
HM 63 for pinion bearing cup removing.
J 1301 for axle shaft and pinion shaft bearing removing and replacing.
J 354 A Differential bearing cone remover.
J 355 Differential bearing cone installing.

Never force a cup or a cone by hammering as improperly applied force will cause brinnelling and noise or failure.

REAR SPRING

REAR SPRING MOUNTING. The spring seat is welded to the axle housing. A rubber cushion is fitted over the top and bottom of the spring so that no metal to metal contact exists between the parts.

The rubber cushion prevents noises from the road or the axle being transmitted through the springs to the chassis and body.

The U bolts should be drawn tight and tightened every time axle or brake or wheel work is done.

Keep U bolts tight.

NOTE: Tighten rear spring clip nuts with a torsion wrench to 40 foot pounds.

REAR AXLE NOISES

Different types of noises that are heard are charged to the rear axle whereas they are from other causes, such as muffler or tires. Tire noise is usually attributable to low pressures, incorrect wheel alignment or uneven tire wear. This noise is more pronounced between 20 and 28 miles per hour, whereas axle noise will show a variation under different operation conditions, such as, part throttle, acceleration and deceleration.

Determine that the tires are not the source of the noise, test to determine what type of axle noise is present. There are three types of axle noise:

Drive Noise
Coast Noise
Bearing Noise

In diagnosing the type of noise, a level concrete road should be chosen, as normal tire noise is least noticeable on this type of road. The lubricant in the rear axle should be warm before a definite test is made.

After the axle has been brought to operating temperature, the types of noise may be diagnosed as follows:

DRIVE NOISE which is noticeable on constant acceleration from 15 to 45 M.P.H. and is most pronounced between the speeds of 22 to 35 M.P.H. When determining the extent of this noise or hum, it must be remembered that a slight hum is normal if noticeable within a two to five-mile range. However, if the noise is of a heavy pitch and increases as car speeds are increased, the differential should be adjusted.

COAST NOISE should be checked as follows: Bring the car up to a predetermined speed, preferably above 45 M.P.H. and then with clutch engaged release the throttle, allowing the car to decelerate through its speed range to approximately 15 M.P.H. Here again discretion should be used in determining the noise as here also a slight noise or hum is permissable. However, if the noise is heavy and irregular, the differential should be adjusted.

BEARING NOISE. Bearings improperly adjusted, worn or rough, will aggravate the above conditions. Bearing noise may be distinguished from the other two types by the very irregular drive noise on acceleration and a very rough and irregular coast noise on deceleration.

Should it be determined that axle noise exists or if it is necessary to replace any of the parts, the disassembly procedure should be followed.

In correcting the noise condition, considerable care should be taken to adjust within proper limits and in general should be made by moving the pinion in or out on the ring gear teeth.

To make these corrections it will be necessary to add to or subtract from the drive pinion shim pack.

The back lash should be checked after either of the above mentioned adjustments, these adjustments will either increase or decrease the amount of back lash, depending upon which adjustment is made and the amount. This back lash adjustment should range from .0005" to .0035".

REFERENCES

SOURCE OF INFORMATION	DATE	SUBJECT

BRAKES

SPECIFICATIONS

Type used (all models)..4 wheel Bendix Hydraulic
Drum type.....Centrifuse
Drum diameter -
  Model 10,11,12,18.....10"
  Model 14,15,17.....11"
Rear wheel bearing -
  Model 10TR,10PA,10DL..Small(10" brake)
  Model 10CM,11,12,18...Large(10" brake)
  Model 14,15,17.....Large(11" brake)
  3" x 5", 6 cyl.
    engine uses.....Large(10" brake)
Lining -
  Primary shoe.....Moulded
  Secondary shoe.....Woven
  Width.....1-3/4"
  Thickness.....7/32"
  Length per wheel -
    10" brake.....22-1/8"
  Length per wheel -
    11" brake.....23-15/16"
  Lining area in sq. in.
    10" brake.....155"
  Lining area in sq. in.
    11" brake.....167-1/2"
Adjustments -
  Anchor pin.....Radially-Single
  Anchor pin nut-torsion
    wrench.....Tighten to 85 foot pounds
Lining clearance.....0075"
Wheel cylinder screw-
  torsion wrench.....Tighten to 15-17 foot pounds
Mechanical follow-up....1-1/4"
Pedal to floor board
  clearance.....1/4"
Brake and clutch pedal
  shank nuts.....22 foot pounds

HYDRAULIC BRAKES

BRAKE EQUIPMENT of all models is the 4 wheel Bendix Hydraulic consisting of a master cylinder operated by an adjustable link from the brake pedal, four double piston wheel cylinders mounted on the brake backing plates and all connecting tubing. Depressing the brake pedal forces fluid out of the master cylinder into the wheel cylinders where it separates the pistons and applies the brakes. When the brake pedal is allowed to return to its normal position the brake shoe springs return the wheel cylinder pistons to their normal position and the fluid is pressed back into the master cylinder.

MECHANICAL BRAKES

MECHANICAL BRAKE SYSTEM ON REAR WHEELS ONLY. The rear wheel brakes are connected for mechanical emergency operation by cable and conduit connections to the hand brake, also foot pedal linkage.

Should the hydraulic system become inoperative for any reason, continued pressure on the foot brake pedal causes a pedal push rod adjustable end nut (16, Fig. 294) to contact the front face of pedal push rod (14). Push rod adjustable end (15) is a sliding fit in the push rod (14).

To prevent mechanical braking during the normal hydraulic operation, also to make certain the proper action of the mechanical brake cables in case the hydraulic system does not operate, a clearance of 1-1/4" must be maintained between the rear face of nut (16) and the front face of push rod (14).

Mechanical braking power is transmitted thru the push rod to the cable lever (10) and finally thru cables (23 and 24) to the rear brake shoes.

The operation of the cables on the rear shoes is by means of the brake link (13, Fig. 298) mounted between the shoes and actuated by brake lever (10), which is pivoted on the secondary shoe.

BRAKE CONSTRUCTION

SINGLE ANCHOR SHOES. All models use the single anchor, two shoe, duo servo

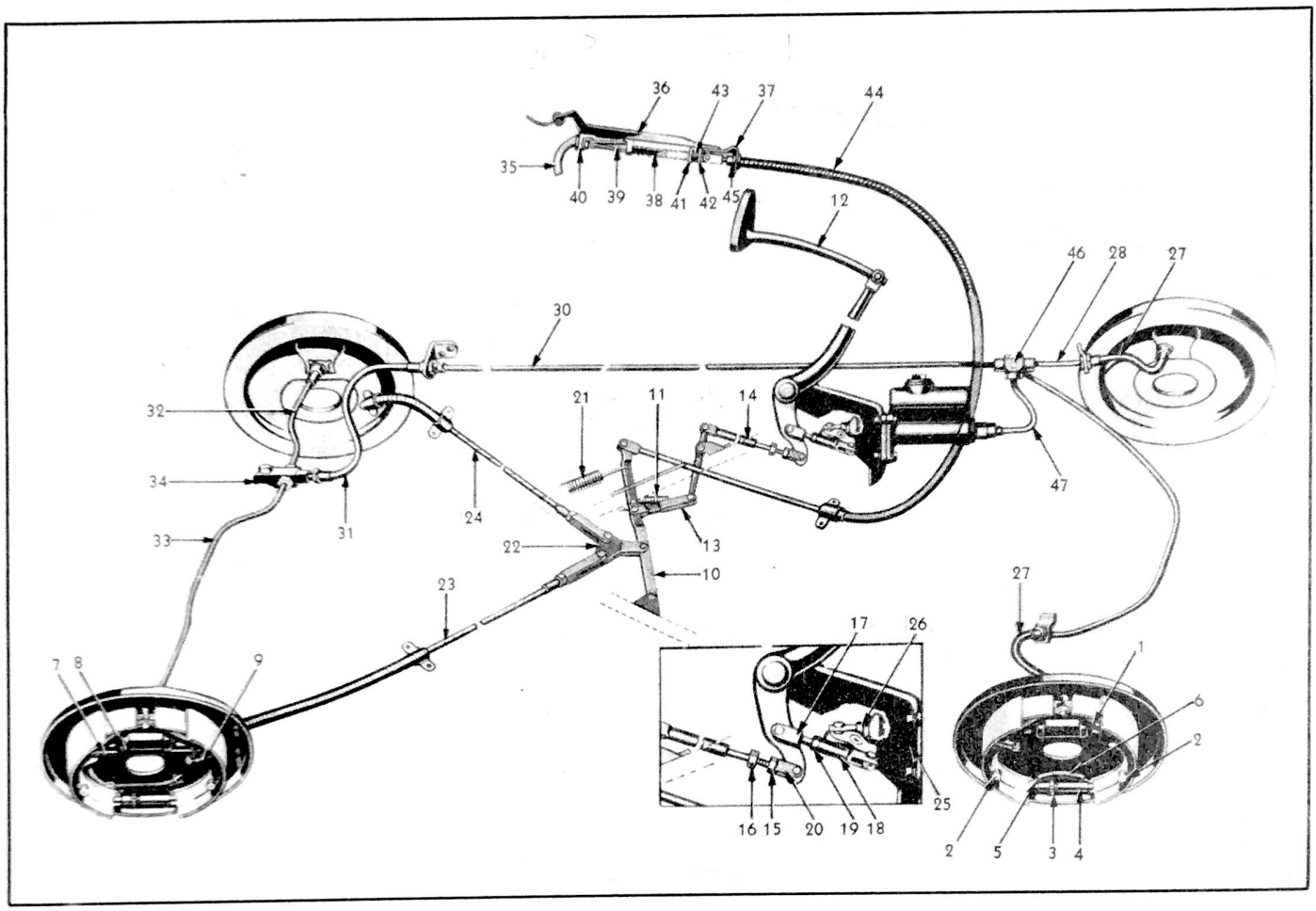

Figure 294 - Brake Control

1. Brake shoe to anchor pin spring.
2. Brake shoe hold-down spring cup.
3. Brake adjusting screw - (star wheel).
4. Brake adjusting screw - pivot nut.
5. Brake adjusting screw socket.
6. Brake adjusting screw spring.
7. Brake shoe cable lever.
8. Brake shoe cable lever strut.
9. Brake shoe to anchor bracket spring.
10. Brake control lever assembly.
11. Control lever return spring.
12. Brake pedal.
13. Play link assembly.
14. Push rod - (to brake control lever).
15. Push rod - adjustable end lock nut.
16. Push rod - adjustable end.
17. Pull rod assembly.
18. Pull rod adjustable end.
19. Pull rod adjustable end nut.
20. Push rod adjustable end yoke.
21. Pull rod lever return spring.
22. Brake control lever cable toggle.
23. Rear brake cable assembly - right hand.
24. Rear brake cable assembly - left hand.
25. Master cylinder mounting bracket.
26. Master cylinder operating lever assembly.
27. Wheel cylinder hose assembly.
28. Tube assembly - frame tee to left hand front hose.
29. Tube assembly - frame tee to right hand front hose.
30. Tube assembly - frame tee to rear hose.
31. Wheel cylinder hose assembly.
32. Tube assembly - rear axle tee to left hand rear wheel.
33. Tube assembly - rear axle tee to right hand rear wheel.
34. Rear axle tee.
35. Hand brake grip.
36. Hand brake mounting bracket.
37. Mounting bracket support.
38. Hand brake ratchet rod.
39. Hand brake ratchet rod lock spring.
40. Hand brake ratchet rod housing.
41. Hand brake ratchet stabilizer - (inner).
42. Hand brake ratchet stabilizer - (outer).
43. Hand brake ratchet stabilizer spring.
44. Hand brake cable and conduit.
45. Hand brake to dash retainer.
46. Frame tee.
47. Tube assembly - Master cylinder to frame tee.

action brake. The two shoes are marked "P" for primary and "S" for secondary or rear.

Regardless of the position in which the brake assembly is mounted, the primary shoe (2, Fig. 298) is always "ahead" of the anchor (1) in the direction of the forward rotation of the drum and transmits servo action to the secondary shoe (4) thru the adjusting screw (8) during a forward braking application.

In reverse, the opposite brake application takes place.

HAND BRAKING is thru a pull type, pistol grip, self-locking, hand control located under the instrument panel to the left of the steering column.

The hand brake can be applied much more easily by depressing the brake pedal in the ordinary way and at the same time pulling upward on the hand brake lever. The load on the hand brake cables, in expanding the shoes against the brake drums, is relieved and the possibility of a vacuum being created in the rear wheel cylinders is eliminated, which might draw air into the hydraulic system past the rubber cups behind the pistons as the shoes are manually expanded.

BRAKE MASTER CYLINDER is a combined supply tank and master cylinder. It maintains a constant volume of fluid in the system at all times and regardless of heat or cold conditions causes expansion or contraction. It acts as a pump during bleeding operations.

The piston (2, Fig. 295) is returned to a released position much faster than the fluid returns into the master cylinder thru the outlet.

A momentary vacuum will exist in the cylinder barrel and additional fluid drawn into the system from the reservoir thru drilled holes in the piston (2) and past the lip of the cup (4).

The brake shoe retracting springs exert a pressure on the fluid sufficiently strong to lift valve (16) off its seat and permits fluid from the lines to return to the master cylinder. Excess fluid is returned by port (3) into the reservoir, filling the cylinder for the next brake application.

It is necessary that rod (1) which is attached to the brake pedal operating rod, be adjusted for clearance where it seats in piston (2) so that there is 1/4" free movement of the brake pedal pad before the pressure stroke starts.

Cup (4) is thus permitted to be clear of port (3) when piston (2) is in its released position. *If this port is not cleared by the piston, the compensating action of the master cylinder will be destroyed and the brakes will drag.*

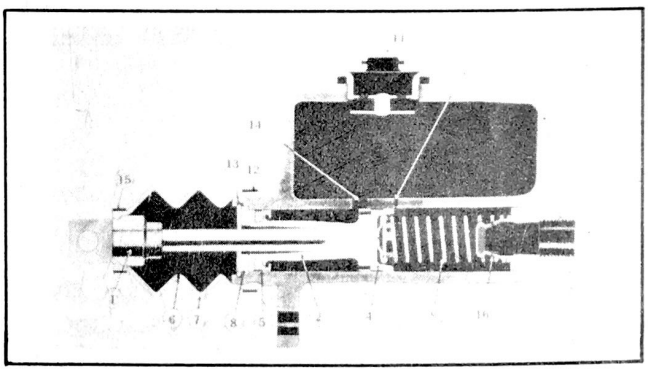

Figure 295 - Master Cylinder

1. Push rod
2. Piston.
3. Outlet port.
4. Piston cup primary.
5. Piston cup secondary.
6. Push rod guard breather hole.
7. Push rod guard.
8. Piston stop plate.
9. Piston spring.
11. Filler cap.
12. Push rod guard strap-large.
13. Piston stop plate lock wire.
14. Inlet port.
15. Push rod guard strap-small.
16. Check valve.

Secondary cup (5) prevents fluid from leaking out of master cylinder into boot (7). Supply tank filler cap (11) is located under the left side of the bonnet for checking the level of the fluid. The

boot breather hole (6) should be kept open, free of dirt.

Master cylinder should be kept at least one half full of Hudson Hydraulic Brake Fluid. The filler cap and master cylinder should always be cleaned of all dirt and grit before removing the cap. Grit in the fluid will cause scoring of the cylinders and possible plugging of lines and ports.

The master cylinder operating lever for 1941 cars has the flat boss, which operates the stop light switch, extended to conform with a revised position of the stop light switch.

BRAKE DRUM DUST SHIELD is a press fit on the drum and is also staked in 4 equally distant places to the drum. A round nose, half round, or keyseating chisel can be used to raise and push the metal of the drum against the dust shield, thereby staking it in place.

BRAKE REPAIR

MASTER CYLINDER DISASSEMBLING

Remove large foot strap (12), Fig. 295, that fastens boot to cylinder casting.

Remove boot: link and small boot strap.

Remove retainer spring (13) using a sharp pointed screw driver.

Remove internal parts.

Check condition of rubber parts and the cylinder bore for scratches or pits.

MASTER CYLINDER HONING. If the cylinder walls are scratched or pitted, have the cylinder honed. The walls have to be highly polished for efficient operation.

Wagner Electric Corporation branches have the equipment necessary for reconditioning master cylinders.

MASTER CYLINDER ASSEMBLING

Use new rubber cups.

Wash master cylinder and the cups in clean alcohol.

Dip master cylinder and all parts in HUDSON HYDRAULIC BRAKE FLUID for lubrication.

Install valve (16), Fig. 295, and return spring (9).

Install primary cup (4) Piston assembly (2) and piston ring (8).

Snap the retainer spring in its groove.

Assemble boot and link in place.

Replace the large boot strap.

Install on car.

MASTER CYLINDER REPAIR KIT is available and is a very convenient way of obtaining all of the parts necessary for the repair of the master cylinder.

Consists of:

1 Piston complete
1 Piston cup (primary)
1 Check valve assembly
1 Check valve seat
1 Master cylinder cap gasket
1 Outlet fitting bolt gasket
1 Outlet fitting gasket

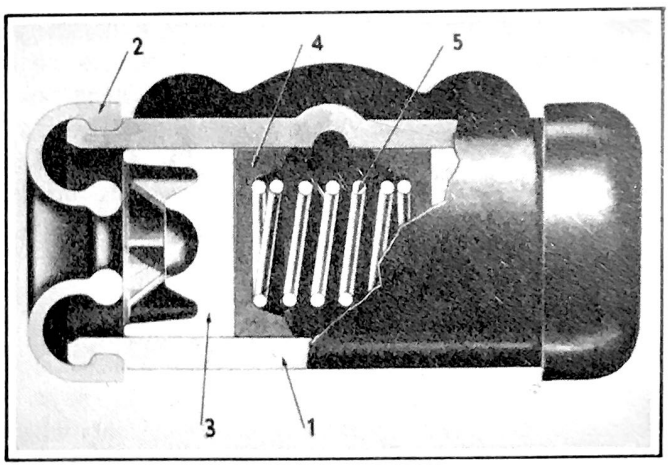

Figure 296 - Wheel Cylinder

1. Wheel cylinder.
2. Wheel cylinder end guard.
3. Piston.
4. Piston cup.
5. Piston cup spring.

WHEEL CYLINDER. The wheel cylinder is the unit which changes the applied hydraulic pressure into a mechanical force.

The wheel cylinder is composed of:

1. Wheel cylinder casting.
2. Wheel cylinder end guard.

3. Pistons (opposed to each other).
4. Piston cups (opposed to each other).
5. Piston cup return spring.

At the uppermost position and between the piston cups is a bleeder connection used to expel air from the system.

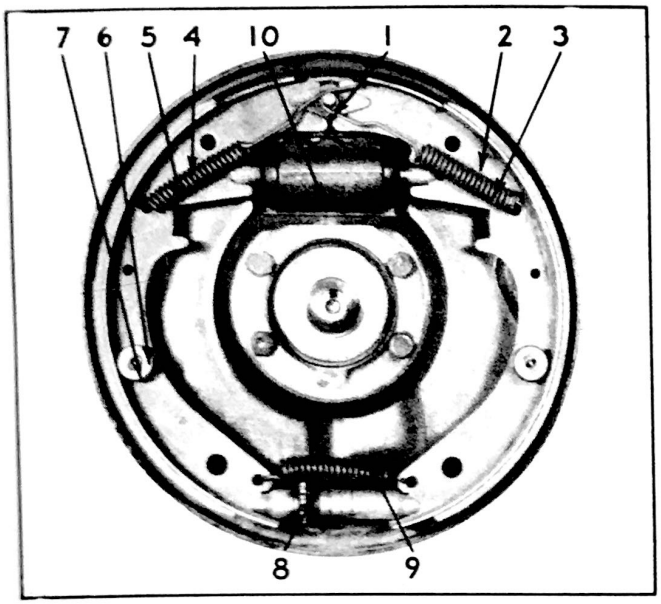

Figure 297 - Front Brake

1. Brake anchor pin.
2. Primary brake shoe.
3. Primary brake shoe to anchor spring.
4. Secondary brake shoe.
5. Secondary brake shoe to anchor spring.
6. Brake shoe hold down spring cup.
7. Brake shoe hold down spring pin.
8. Brake adjusting screw.
9. Brake adjusting screw spring.
10. Wheel cylinder.

FRONT WHEEL CYLINDER REMOVING

Disconnect tube from hose at frame or axle bracket.

Remove hose lock nut at frame bracket.

Remove the two cylinder fastening screws on rear of shield.

Place piston clamp on wheel cylinder Fig. 299.

Remove brake shoe retracting spring Fig. 297, which permits shoe to move outward.

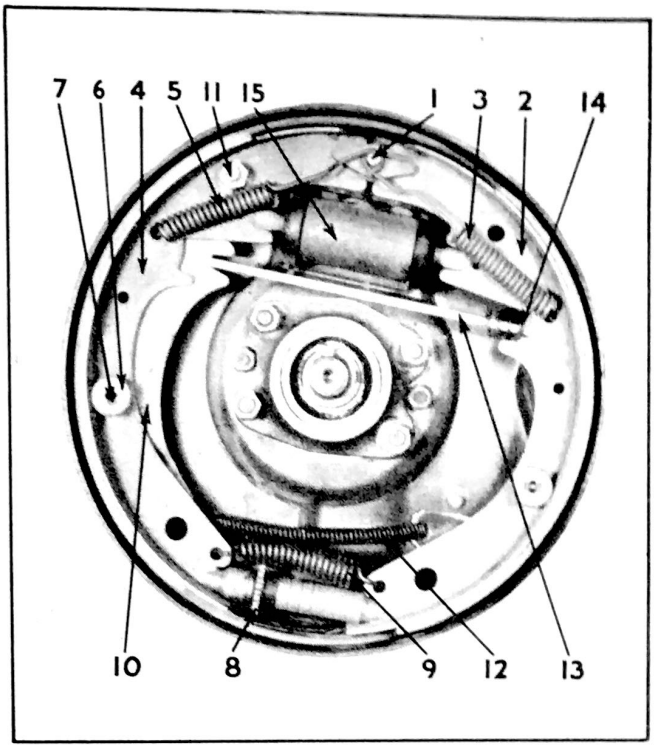

Figure 298 - Rear Brake

1. Brake anchor pin.
2. Primary brake shoe.
3. Primary brake shoe to anchor spring.
4. Secondary brake shoe.
5. Secondary brake shoe to anchor spring.
6. Brake shoe hold-down spring pin.
7. Brake shoe hold-down spring cup.
8. Brake adjusting screw.
9. Brake adjusting screw spring.
10. Brake shoe cable lever.
11. Brake shoe cable lever to shoe pin.
12. Brake cable spring.
13. Brake shoe cable lever strut.
14. Brake shoe cable lever strut to shoe spring.
15. Wheel cylinder.

Remove connecting links (4) between cylinder pistons and brake shoes. Cylinder and hose may be withdrawn as a unit.

REAR WHEEL CYLINDER REMOVING

Disconnect tube from cylinder fitting.

Remove the two cylinder fastening screws on rear of brake shield.

Place piston clamp on wheel cylinder as shown in Fig. 299.

Remove brake shoe retracting springs Fig. 298, and connecting links.

Cylinder may then be withdrawn.

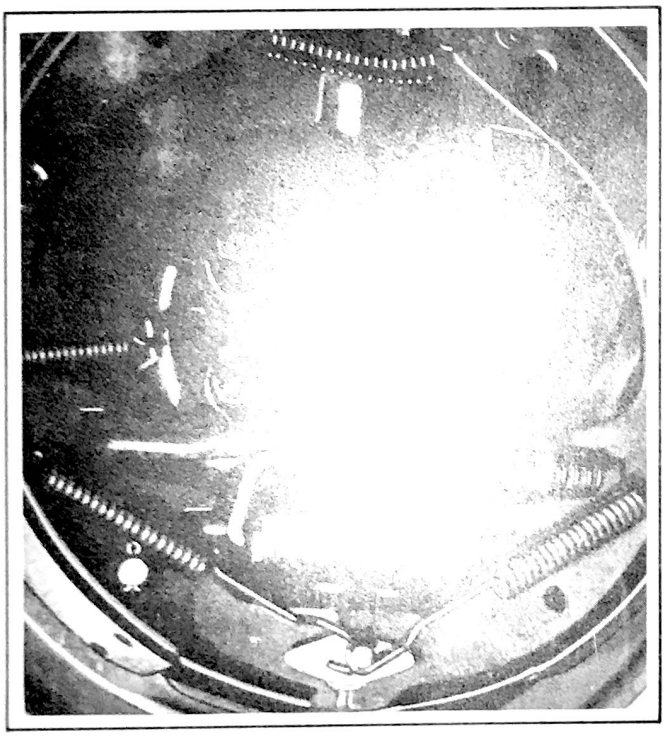

Figure 299 - Wheel Cylinder Clamp

WHEEL CYLINDER DISASSEMBLING. The front and rear wheel brake cylinder requires the same inspection as the Master Brake cylinder.

See Master Cylinder Honing Page 226.

To disassemble -
Remove end guards (2) Fig. 296.
Remove pistons (3).
Remove piston cups (4).
Remove piston cup spring (5).

WHEEL CYLINDER ASSEMBLING

Use new rubber cups.

Wash master cylinder and the cups in clean alcohol.

Dip master cylinder and all parts in Genuine HUDSON HYDRAULIC BRAKE FLUID for lubrication.

Assemble as shown in Fig. 296.

The wheel cylinder screws should be tightened with a torque wrench to 180 to 200 inch pounds or 15 to 17 foot pounds, using a torque wrench J 1313 or J 1300.

WHEEL CYLINDER REPAIR KIT is available through the Factory Parts Department which contains all of the parts necessary for efficiently repairing wheel cylinders.

It consists of:
2 wheel cylinder pistons
2 wheel cylinder piston cups
2 wheel cylinder end guards
1 wheel cylinder tube fitting gasket

HYDRAULIC BRAKE FLUID must have a high boiling point to prevent evaporation and to prevent any tendency to vapor lock, yet at the same time a good brake fluid must remain fluid at cold temperatures.

There are some types of brake fluid that are composed of ethyl alcohol and castor oil; cellosolve and castor oil; alcohol, water, and glucose with some chromate added to retard corrosion; mineral oil; anti-freeze alcohols with no castor oil added.

Brake fluids of the above types are all harmful because -

Ethyl alcohol has a lower boiling point than HUDSON BRAKE FLUID, causing it to vaporize more rapidly and increasing the tendency to produce a vapor lock in the lines.

Cellosolve has a rather severe action on the rubber parts and should not be used for that reason.

Water and glucose is worthless as water will corrode the metal parts of the system and glucose forms a sticky mass when exposed to air and has no lubricating qualities at all.

Mineral oil of any kind is the fluid to guard against. The slightest trace of mineral oil will destroy the sealing qualities of the rubber piston cups in

two or three days. Never wash any hydraulic brake parts in gasoline as even the slightest amount of mineral oil present in gasoline will affect the rubber parts.

Plain alcohols (most of which contain up to 10% water) should not be used because alcohol has no lubricating quality and due to its extreme thinness, will leak past the rubber cups and possibly saturate the brake linings.

Use Hudson Hydraulic Brake Fluid which can be purchased in -

1 Quart Cans or
1 Gallon Cans

BLEEDING AT ALL WHEELS. Whenever a main pipe line is removed from the master cylinder or the supply tank becomes empty then the brake system must be bled at all four wheels.

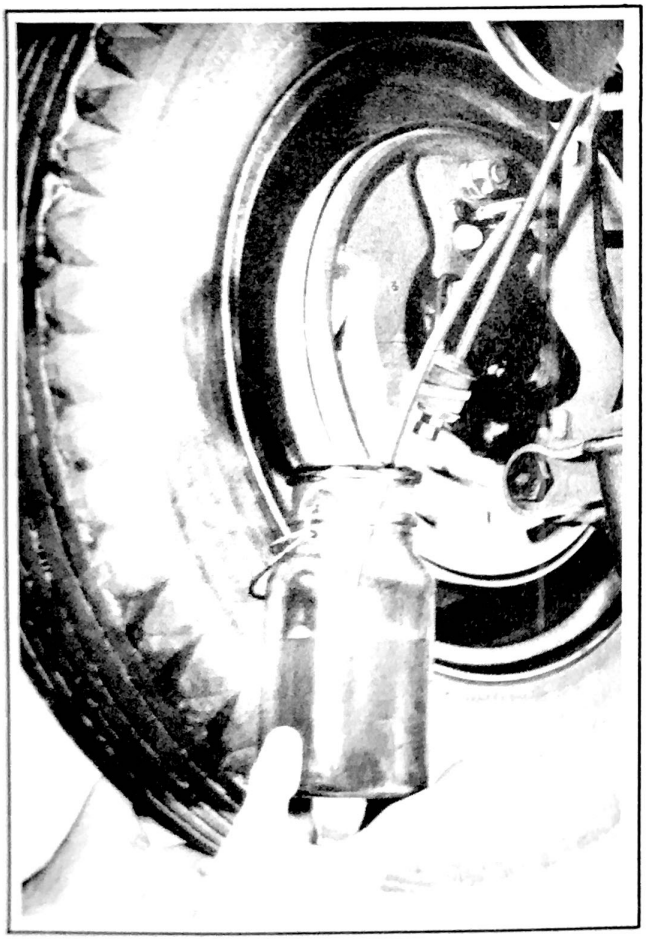

Figure 300 - Bleeding Wheel Cylinder

BLEEDING AT ONE WHEEL. Whenever a line is disconnected from any individual wheel then that wheel cylinder only must be bled.

HOW TO BLEED. The bleeding operation should be performed at only one wheel cylinder at a time and repeated at the other wheel cylinders if necessary

Fill the bottle J 713 Fig. 301, using Genuine HUDSON HYDRAULIC BRAKE FLUID.

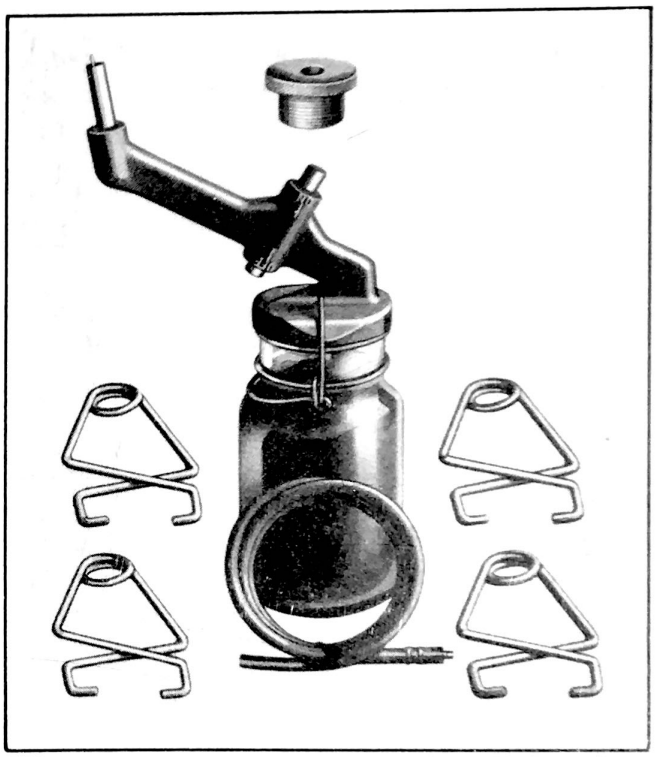

Figure 301
Filling and Bleeding Equipment Consists of Filler Bottle with Threaded Adapter J-713B - Bleeder Drain Tube J-628 Wheel Cylinder Clamps KMO-145 (Set of 4)

Put nozzle in master cylinder reservoir and open filler bottle valve before starting.

This will keep the tank half full of fluid during the bleeding operation.

If the filling bottle is not used, fill the reservoir with HUDSON HYDRAULIC BRAKE FLUID and keep it at least half full during the bleeding operation.

Remove screw, Fig. 300, from end of bleeder valve and attach bleeder tube (J 628) Fig. **301.** Allow tube to hang in a clean container partly filled with fluid such as a pint Mason jar.

Unscrew bleeder valve, Fig. 300, three fourths of a turn and depress foot pedal by hand, allowing pedal to return to released position slowly. This gives a pumping action which forces fluid through the tubing and out at the wheel cylinder carrying with it any air that may be present.

After the brake pedal is depressed it must be allowed to return slowly, otherwise air may be drawn into the system.

Watch the flow of fluid from hose and when all air bubbles cease to appear, close the bleeder connection.

The end of the hose must be kept below the surface of the fluid in the pint jar.

Fluid withdrawn in any bleeding operation should not be used again.

Replenish fluid in the master cylinder after each cylinder is bled. If filler bottle J 713 C (filler and threaded adapter) is used, this constant check on the master cylinder is not necessary because of its larger capacity and the fact that the quantity is easily watched.

If the master cylinder is drained during the bleeding operation, air will enter the system and the bleeding will have to be done all over again at all four wheels.

When bleeding operation is completed the master cylinder must be refilled.

Check fluid level in master cylinder every 1000 miles.

HAND BRAKE LEVER ADJUSTMENT. Pull the hand brake lever two notches from full release or until a 1/8" clearance is obtained between the hand brake control lever (10) Fig. 294 and the end of the slot in the lever guide plate.

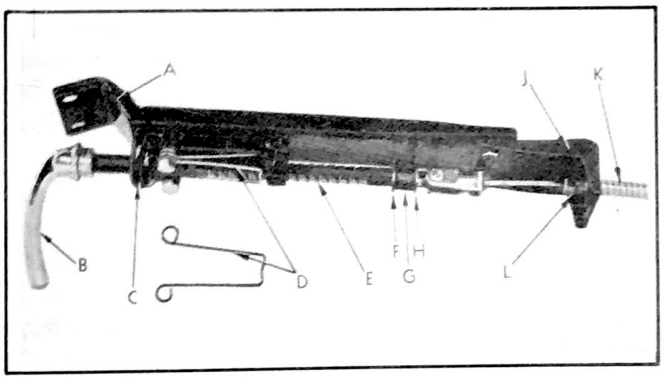

Figure 302 - Hand Brake

A. Hand brake mounting bracket.
B. Hand brake grip.
C. Hand brake ratchet rod housing.
D. Hand brake ratched rod lock spring.
E. Hand brake ratchet rod.
F. Hand brake ratchet stabilizer - inner.
G. Hand brake ratchet stabilizer spring.
H. Hand brake ratchet stabilizer - outer.
J. Mounting bracket support.
K. Hand brake cable and conduit assembly.
L. Hand brake to dash retainer.

BRAKE PEDAL ADJUSTMENT. The pedal return spring holds the bottom of master cylinder operating lever (26) Fig. 294, against the stop.

Check to see if the lever is in position.

If the pedal shank (in the fully released pedal position) touches the floor board or has more than 1/4" clearance, it should be adjusted.

Loosen pull rod adjustable end nut (19) on the pull rod assembly (17).

Remove clevis pin from the bottom of master cylinder operating lever (26).

Turn the pull rod (18) to increase length until the clevis pin just enters the rod with the pedal shank (12) one fourth of an inch from the toe board and the bellcrank against its stop.

Reinsert clevis pin in the bottom of master cylinder operating lever (26) and tighten pull rod adjustable end nut (19).

This adjustment is important because if the master cylinder piston does not return to the end of the cylinder, the brakes will drag.

"HARDER" BRAKE PEDAL ADJUSTMENT. The master cylinder operating lever, (26), Fig. 294, has two holes for an adjustment in cases where a "harder" brake pedal adjustment is desired with a less sensitive brake action.

The factory standard adjustment utilized the left hole, see Fig. 294.

Changing the clevis pin of the master cylinder operating linkage from left hole to right hole will give a harder brake pedal with a less sensitive brake action.

Recheck brake pedal adjustment.

PEDAL PUSH ROD ADJUSTMENT. With brake control lever (10), Fig. 294, against stop, loosen lock nut (15) and adjust push rod (16) until rear face is 1 1/4" from front end of push rod (14).

Tighten lock nut.

This adjustment is important in order to obtain the proper mechanical follow-up to the hydraulic operation of the rear brakes. The safety factor of having mechanical brakes following the hydraulic brake action is lost unless this adjustment is checked on every car whenever brake work or inspection is done.

MINOR ADJUSTMENT TO TAKE CARE OF BRAKE LINING WEAR. Brake drum should be at approximately room temperature when making adjustments, because if brakes are adjusted when the drums are hot and therefore expanded, the shoes may drag when the drums cool and contract.

1. Jack up all wheels clear of the floor.

2. Check and remove end play in wheel bearings if necessary.

3. See that parking brake lever is in the fully released position. Check parking brake cables connecting to the rear brakes to insure that the cables have not been adjusted so short that the shoes have been moving off of their anchor pin seat (in other words, the brakes are partially applied).

4. The brake pedal shank should not have more than 1/4" clearance with the brake pedal in its fully released position.

The brake control lever should be against its stop when the push rod is 1 1/4" from its rear face to the front end of the push rod.

5. Check the anchor pin nut with a J 1313 torque wrench to make sure it is tight. It should check to 85 foot pounds.

If an anchor pin nut is found loose, reset the anchor according to instructions under "Major Brake Adjustment".

6. Remove adjusting hole cover from the backing plate (Fig. 303). Expand the brake shoes by turning adjusting screw. Move handle of Brake Adjusting Tool J 1028 as shown in Fig. 303, until the brake

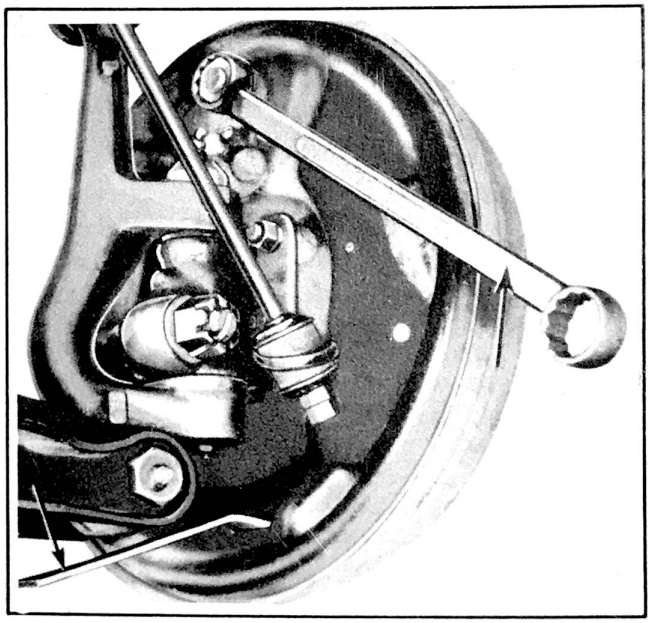

Figure 303 - Brake Adjustment

drum can just be turned by hand. Then back off adjusting screw moving handle of Tool J 1028 approximately 14 notches.

Back off each screw the same number of turns.

Make this adjustment at all four wheels.

The brake drum should turn freely and if there is a heavy drag between shoes and drum, reset the anchor pin as given under "Major Brake Adjustment".

7. Re-install the adjusting hole covers in the backing plates.

8. Pull the parking brake lever two notches from full release or until 1/8" clearance is had between the brake control lever (10, Fig. 294) and the end of slot in the lever guide plate.

9. Pull cables tight and adjust the ends so that the clevis pins just enter the holes in the toggle (22, Fig. 294).

10. Release hand brake.

11. Reinstall wheels and lower the car.

12. Test for operation on a level road. Do not test on the side of a crowned road.

NOTE: Lubricate brake cables with Lubriplate Grade 107.

COMPLETE BRAKE ADJUSTMENT is necessary when a minor adjustment fails to give satisfactory results or when replacing shoe and lining assemblies.

1. Jack up all wheels clear of the floor.
2. Remove wheels.

Check linings for wear and loose rivets. Inspect linings for metal or foreign particles that may be inbedded in the surfaces and remove any that are found.

Shoe and lining assemblies having linings soaked with lubricant or Hydraulic brake fluid should be replaced. They cannot be satisfactorily cleaned.

Use wheel cylinder clamp KMO 145 if brake shoes are to be removed. This clamp prevents the piston being forced out of the wheel cylinder either from the natural back pressure in the hydraulic system (combined with the spring pressure between the cups), or by an accidental movement of the brake pedal. Piston ejection would cause loss of fluid and allow air to enter the hydraulic system, necessitating bleeding the system to remove the air.

3. Inspect each drum braking surface and rebore the drum if necessary. *Remove only sufficient metal to provide a smooth surface. If excess material is removed the drum may be weakened to the extent that erratic braking and rapid lining wear may result.* The drum braking surface must also be very smooth and true to prevent excessive lining wear and faulty brake operation.

4. Disconnect hand brake cables at the equalizer bar.

5. Thoroughly clean shoes and brake backing plates with a steel wire brush. All brake frictional points should be thoroughly cleaned after which a thin coat of Bendix Brake Lubricant should be applied at these points.

6. Clean the exposed portion of all hand brake cables and then pull the cables thru conduit from the wheel end to expose that part of cable that is sheathed by the conduit. Clean this portion of the cable and lubricate freely with Bendix Cable Lubricant.

7. Push cable into conduit and after the shoes have been reinstalled, connect the cable to the shoe operating lever (10, Fig. 298), leaving the adjustable yoke end of cable disconnected.

8. To connect brake cable to shoe operating lever move cable return spring away from cable end and place end into groove at the end of operating lever.

Remove any excess lubricant from end of the conduit.

After the cable is in place allow the cable return spring to return against the lever to hold the cable in place.

9. Inspect backing plates for looseness and tighten if necessary.

10. When newly lined shoes are installed it will be necessary to back off on the adjusting screw to provide clearance for drum installation. After rear shoes are in place attach the cable end to the rear brake lever but *do not connect front end of cable.*

11. Before installing the front wheels remove any excess grease from inside the hub and hub cap to prevent grease leakage onto the brake assembly and lining.

Lubricate the front wheel bearings by applying a milled sodium soap base lubricant to the bearings and races only (3 ounces is sufficient).

12. Check the level of lubricant in the rear axle housing. This should not be above the lower edge of the filler plug hole. Too high a level will cause lubricant leaks at the rear wheel oil seals.

Excessive looseness at front or rear wheel bearings should be corrected.

13. After installing wheels insert a pry between the lining of the secondary shoe and the drum (thru drum feeler gauge hole) and move the shoe assembly until the *primary* shoe is against the opposite side of the drum. The primary shoe can be pried against the drum by inserting the .015" feeler gauge between the adjusting screw end of secondary shoe lining and the drum and then spreading the shoes by rotating the adjusting screw.

The secondary shoe is always toward the rear and the primary shoe toward the front of the car.

14. Insert a .015" feeler gauge between the secondary shoe lining and the drum and check the clearance between the lining and the drum at each end of the secondary shoe.

A clearance of .015" at each end of secondary shoe with the primary shoe against the opposite side of the drum indicates a good anchor pin and adjusting screw positioning.

If a .015" clearance cannot be obtained at both ends of the secondary shoe by rotating the adjusting screw, the anchor pin must be adjusted.

15. The anchor pin is adjusted radially. Loosen the anchor pin nut just enough to permit moving the pin by tapping the nut with a soft hammer.

Do not back the nut off too much as this would result in moving the shoes out of position when re-tightening the nut.

To *reduce* the clearance between the lining and the drum at the *anchor end* of the secondary shoe, move the anchor pin *away* from the center.

To *reduce* the clearance at the *adjusting screw end,* move the anchor pin *toward* the center.

After moving the anchor pin it will be necessary to pry the primary shoe against the drum by inserting a pry between the lining of the secondary shoe and drum (thru the drum feeler gauge hole) and move the shoe assembly until the primary shoe is against the opposite side of the drum. The primary shoe can be pried against the drum by inserting the .015" feeler gauge between the adjusting screw end of the secondary shoe lining and drum and then spreading the shoes by rotating the adjusting screw.

Insert the .015" feeler gauge between the secondary shoe lining and drum and

check the lining to drum clearance at each end of the secondary shoe. The clearance should be .015" at both ends of the secondary shoe.

16. Tighten the anchor pin nut to 750 to 900 inch pounds or 63 to 75 foot pounds using torque wrench J 1313.

Make sure that the anchor pin does not move during the tightening operation by again checking the secondary shoe clearance after tightening the nut.

17. *At the rear wheels only,* tighten the adjusting screws until the wheels can hardly be turned by hand. Be sure that parking brake lever is applied approximately two notches or 1/8" at brake control lever from the fully released position. Adjust parking brake cable so that all cable slack is removed when the cable is connected.

18. Back off adjusting screw at the rear wheels approximately 14 notches.

19. Replace adjusting screw hole covers in the backing plate and feeler gauge hole cover on the drum at all four wheels.

BRAKE SHOE AND MOUNTING DISASSEMBLING

1. Place wheel cylinder clamps on wheel cylinders. Fig. 299.

2. Remove retracting springs for both primary shoe and secondary shoe and anchor bracket spring. Fig. 298.

3. Remove brake shoe hold down spring cups, springs and spring pins (6).

4. Remove shoes (2) and (4).

5. Remove brake adjusting screw spring (9) and screw (8).

6. Remove shoe to cylinder links and shoe cable lever to shoe pin (11).

7. Disconnect rear brake cable shoe cable lever (10) shoe cable lever strut (13).

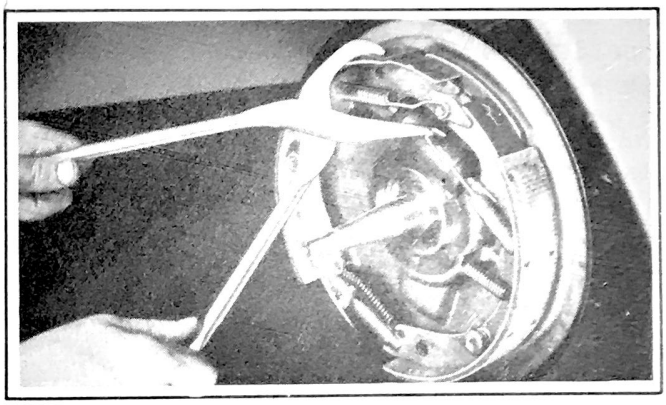

Figure 304
Brake Shoe Spring Tongs HMO-142

8. Remove eccentric by taking off nut.

9. Remove wheel cylinder by disconnecting hose at backing plate. Remove two cylinder mounting bolts and withdraw cylinder with cylinder clamp in place.

To reassemble reverse order of removal.

Wash and thoroughly clean all parts and then lubricate.

BRAKE LINING. The Hudson primary shoe lining is constructed to give a slightly harder pedal at the low end and thereby minimizing the tendency of the brakes grabbing on slow speed.

Different linings have different characteristics and when relining brakes this should be kept in mind, otherwise it will produce a different brake operation on one wheel than another with a tendency of the car to pull sidewise.

1. Do not attempt to wash and use greasy linings as they cannot be cleaned.

2. Linings that are chipped should be replaced.

3. Lining surfaces not accurately ground should be replaced. Lining surfaces must fit squarely and evenly against the drum.

4. Linings held with loose rivets should be replaced.

5. Lining ends not properly chamfered should be replaced.

GENUINE HUDSON LINING sets are supplied in a package together with rivets. The primary shoe lining is moulded and the secondary shoe lining is woven. The linings are accurately ground and carefully inspected to assure you of the Hudson Standard of Service Material.

BRAKE SHOE SETS LINED. New brake shoes with the proper lining, accurately fitted and ground, are available for replacement of shoes with worn linings.

The use of these new brake shoe assemblies makes it possible to reline brakes in a very short time. The time of removing old linings, installing new linings, etc., is saved.

There is no exchange allowance for the old shoes.

POINTS OF CAUTION. Oil or grease should never come in contact with the brake linings.

All surplus grease after filling the wheel hubs must be removed.

No oil or grease should be used on the cams or pins of the brakes and the shoes should be free of any oil or grease.

The drums should be inspected for oil or grease and it should be removed if present. This applies particularly in cases where the wheel hub assemblies have been removed and are being remounted.

LINKAGE LUBRICATION. A thin film of chassis lubricant should be applied to parking brake cable connections, brake eccentrics, anchor links and all moving or possible friction contact points.

In particular, a film of graphite grease should be placed on the brake shoe support ledge on the backing plate as in the course of time an accumulation of rust may interfere with a free brake shoe action. This lubrication has to be done with the hubs and drums removed and with brake cylinder clamps in place. Slide the brake shoes away from the backing plate.

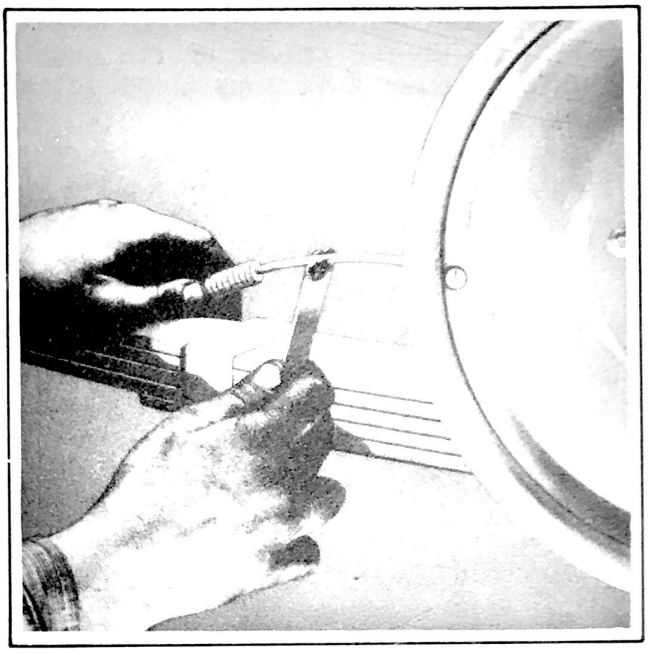

Figure 305 - Lubricating Brake Cables

BRAKE PEDAL GOES TO FLOOR BOARD. If brake pedal goes to floor board the cause is -

1. Normal wear of lining.
2. Leak in hydraulic system.
3. Air in hydraulic system.
4. No fluid in master cylinder.

Remedy -

1. When a driver states that it is necessary to pump the pedal several times before the brakes take hold it is an indication that the brake linings are worn and that it is necessary to set the shoes closer to the brake drums.

Shoes should be set to .015" clearance. See Page 233. Brake drum should be cool. Do not disturb brake anchor pin settings on single anchor brakes.

2. A connection leak in the hydraulic system will allow the brake pedal to go to the toe board gradually.

A cup leak does not necessarily result in any loss of the travel of the pedal but will be shown by a loss of fluid in the master cylinder.

If no leaks are found at the wheels or connections then remove the master cylinder and check the bore for scores or scratches. See Page 226.

3. Air in the hydraulic system will cause a springy or rubbery action of the pedal. Should a sufficient quantity be allowed to get into the system the pedal will go to the toe board under normal pressure. In this case the hydraulic system should be bled. See Page 229.

4. The fluid level in the master cylinder should be checked. If the tank ever becomes empty then air will get into the system and make it necessary to bleed the hydraulic system. See Page 229.

ALL BRAKES DRAG. Cause -

1. Mineral Oil in system.
2. Port hole in master cylinder is closed. See Page 225.

1. The use of any oil having a mineral base (engine oil, kerosene, etc.) will cause the rubber piston cups in master and wheel cylinders to swell and distort, making them useless and it is necessary to replace all piston cups.

The system will have to be thoroughly flushed out with clean alcohol and then refilled with GENUINE HUDSON HYDRAULIC BRAKE FLUID.

2. The port hole (3) Fig. 295, must not be blocked by the piston cup not returning to its proper release position.

This port hole is a relief port and the pressure in the hydraulic system will gradually build up and cause the brakes to drag.

ONE BRAKE DRAGS. Cause -

1. Brake shoe return spring is weak.
2. Brake shoe set too close to the drum.
3. Wheel cylinder cups distorted.
4. Loose wheel bearings.
5. Dirt in the line.

Remedy -

1. Replace brake shoe return spring.
2. Readjust brake shoes to .015" clearance.
3. See "All Brakes Drag."
4. Tighten wheel bearings.
5. Remove dirt and flush out entire system with alcohol.

CAR PULLS TO ONE SIDE. Cause -

1. Oil soaked lining.
2. Brake shoes set incorrectly.
3. Brake backing plate loose.
4. Brake linings are of different makes and, therefore, have different characteristics.
5. Tire not inflated correctly.
6. Caster of front wheels is incorrect.
7. Loose wheel bearing.
8. Dirt in lining or drum scored.

Remedy -

1. Oil or grease soaked linings cannot be saved by washing or cleaning. Replace the linings. See Page 234.

2. The construction of the braking system will cause a slight pull or drift to one side in cases where a brake shoe is set too close on a front wheel.

A rear wheel brake that is set too close will not cause this pull or drift but will make one of the rear wheels lock and slide before the other.

Adjust brake shoes. See Pages 231-234.

3. A loose backing plate will allow the brake assemblies to shift on their locating bolts. These locating bolts determine the exact centers and any shift causes an unqeual brake efficiency.

Tighten backing plates and readjust the brake shoe.

4. Different makes of brake linings are built to reach a certain aim of the manufacturer and the mixing of two different makes of linings on any of the wheels will very possibly give what is known as Soft Pedal Action on one shoe and Hard Pedal Action on another shoe and these shoes may be on one wheel or different wheels.

See "Brake Lining", Page 234.

GENUINE HUDSON BRAKE LINING (in sets) give positive assurance of the best engineering skill to give the best results.

5. Check front tires for proper inflation and approximate equal wear.

6. Check front wheel caster - See "Suspension" section.

7. Adjust wheel bearing.

8. Dirt or foreign matter on the face of the lining. Seriously scored drums should be replaced.

BRAKE PEDAL ACTION SPRINGY OR SPONGY. Cause -

Brake shoes improperly adjusted.
Air in hydraulic system.

Remedy -

Adjust brakes (See Pages 231-234.)
Air in hydraulic system. See "Brake Pedal goes to Floorboard" on Page 235, Remedy 3.

BRAKE PEDAL PRESSURE EXCESSIVE AND STOP UNSATISFACTORY. Cause -

1. Brake shoes improperly adjusted.
2. Improper grade of lining.
3. Oil or grease on lining.
4. Lining making a partial contact with brake drum.
5. Pedal rod adjustment incorrect.

Remedy -

1. Adjust brake shoes. (Pages 231-234)

2. The use of the incorrect grade of brake lining will cause it to lose its gripping power in a short time, making an extra heavy pressure necessary on the brake pedal in an attempt to make up for that lost gripping power the lining should be giving.

3. Oil or grease that has been on the brake lining for the length of time necessary for it to soak in cannot be removed by washing. Replace brake lining that has oil or grease on it.

4. Remove high spots.

5. Adjust pedal rod (Pedal Push Rod Adjustment, Page 231).

LIGHT PEDAL PRESSURE BUT SEVERE BRAKES. Cause -

1. Brake shoes incorrectly adjusted.
2. Loose backing plate.
3. Grease soaked lining.
4. Improper lining.

Remedy -

1. Adjust brakes. (Pages 231-234)
2. Tighten backing plates.
3. Replace brake lining. (Page 234)
4. Install HUDSON lining.

BRAKES SQUEAK. Cause -

1. Backing plates bent or shoe twisted.
2. Dirt imbedded in lining.
3. Lining rivets loose or lining not held tight against the shoe at the lining ends.

Remedy -

1. Straighten or replace damaged parts.

REFERENCES

SOURCE OF INFORMATION	DATE	SUBJECT

SUSPENSION

SPECIFICATIONS

Caster	0° preferred + $1/4^{o}$ to -$1/4^{o}$ permissable
Camber	$1/4^{o}$ to $3/4^{o}$
Maximum variation between right and left wheel caster or camber	$1/2^{o}$
Toe-in	0 - 1/16"
Pivot Pin Inclination	4° 36'
Toe-out	+ or - 30' between wheels
Spindle Pivot Pin Thrust Bearing	Ball
Wheel Bearing Type	Taper roller
Wheel Bearing End Play	.001" to .003"
Tie Rod End Type	Plain bearing
Tie Rod Adjustment	Turn rod
Tie Rod Adjustment - To Increase	Turn in direction of forward wheel travel
Tie Rod Adjustment - To Decrease	Turn in opposite direction
Steering center arm bolt nut - tighten to	65 foot pounds
Steering arm nut - tighten to	105 foot pounds

REAR SPRINGS - LIGHT SCALE

600/100 . 10, 3 and 4 Coupes, Convt
650/100 . 10 Coach, Convt
675/100 . 10 Sedan, Pass chassis
650/100 . 11,12, 3 and 4 Coupes, Convt
675/100 . 11,12,14,15, 2 door Sedans; Convt 14,15, 3 and 4 Coupes, Convt
725/100 . 11,12,14,15 Sedan, Pass Chassis
810/110 . 17,18 Sedan Pass Chassis
Load may vary plus or minus 20 lbs.
Rate may vary plus or minus 5 lbs.

FRONT SUSPENSION

INDEPENDENT FRONT WHEEL SUSPENSION permits either front wheel to take road irregularities without any appreciable effect on the opposite front wheel.

The ability of one front wheel to act independently of the other minimizes road variations that cause "wander" of the car and steering wheel "fight".

Road variations seldom occur simultaneously at both front wheels and when the front wheels are tied together the tendency of one wheel is to follow the other which causes "wander" and creates much of the energy that causes wheel shimmy and the driver to "fight" the steering wheel.

Steering is from a center point which permits easy steering because it is possible to eliminate frictional points not possible with off-center steering.

The vertical (up and down) movement of the front wheels on the road is taken care of by --

FRONT SUSPENSION UPPER SUPPORT. The brake backing plate is bolted to the steering spindle. The steering spindle is attached to the spindle support by a hardened and ground steel pivot pin which has seven ball bearings at the top to carry the thrust load. The steering spindle is held at the bottom by a pivot pin riding in a hardened and ground steel bushing in the spindle support. At the top it is held by an eccentric bushing which is clamped in a centralized position by a lock screw.

This eccentric bushing has several duties to perform. It is the adjustment for front wheel caster and camber. It also joins the spindle support to the upper support arm and pivot.

The upper support arms and pivot are one unit and the pivot is not removable. This assembly rides in bushings at the front and rear of the pivot which is fastened to the frame front cross member by three bolts. The outer end is fastened to the steering spindle support by the eccentric bushing.

FRONT SUSPENSION LOWER SUPPORT. The lower support arms carry the vertical movement of the front wheels and they are joined to the steering spindle support by a threaded pivot pin and nut. The steel seat for the coil springs is riveted to the lower support arms. The upper end of the coil spring is carried in the frame front cross member which is recessed for it. Between the upper end of the coil spring and its seat is a silencer of sound deadening material to eliminate noise, also a shim for adjustment of spring height. In the center of the coil spring is the shock absorber and it operates in a vertical plane. The lower support arms fasten to a pivot that is held to the front frame cross member.

A rubber bumper is attached to the frame side bracket and this limits the downward movement of the suspension. Another rubber bumper is attached to the lower support arm and limits the upward movement of the suspension.

FRONT WHEEL SUSPENSION BUSHINGS are at all of the following attaching points:

Lower support arm pivot, see 13, Fig. 313.
Lower support arm to spindle support pivot, see 17, Fig. 313.
Upper support arm pivot bushing - Front, see 22, Fig. 317.
Upper support arm pivot bushing - Rear, see 23, Fig. 317.
Eccentric bushing, see 24, Fig. 316.

These five points are fitted with hardened steel threaded bushings which provide means for adjustment.

The clearance is from .012" to .026" between the threaded pins and their bushings. This provides clearance for lubrication, the necessary rolling action, side adjustment and freedom of action for movement.

The pivot pins and their hardened and ground steel bushings are threaded into one another, thus they are tied together even though one fits loosely in the other, due to wear.

Wear and noise will not be experienced if the bushings are properly lubricated.

LUBRICATION of the threaded bushings used in the front end suspension should be thorough and with the weight of the car off the bearings.

The front end of the car should be lifted with a jack placed under the front cross member so that the car is supported at the frame and the front suspension relieved of all weight.

See Lubrication Section for specifications of lubricant and lubricate every 1,000 miles.

A grease pressure relief valve is installed in the expansion plug at the bottom of the steering pivot bolt - see Fig. 320.

A GENERAL INSPECTION should be made before starting any adjustments as:

Inflate all tires to the proper pressures. Check front wheel bearing adjustments and if incorrect adjust it. See Chassis Section. Check for looseness at the steering spindle pivot pin and if it is excessive it must be corrected before alignment readings have any value. See Page 251. Check for looseness at drag link and connecting rod ends. Adjust drag link if necessary. See Steering Section. Check for run out of wheels and tires and correct if necessary. See Chassis Section. Check the wheels and tires for balance and correct if necessary. See Chassis Section. Check shock absorber action and correct if necessary. See Page 265.

FRONT END ALIGNMENT is composed of five factors and they comprise the proper adjustment of the front wheels. They are related and dependent on each other.

CASTER is the backward tilt of the steering spindle pivot pin usually measured in degrees.

CAMBER is the outward tilt of the front wheels at the top and usually measured in inches or degrees.

TOE-IN is the drawing together of the front wheels at the front.

PIVOT PIN INCLINATION is the inward tilt of the steering spindle pivot pin at the top.

STEERING GEOMETRY or toe-out on turns is controlled by the movement and angularity of the tie rods.

A front end alignment, therefore, necessitates a general check of all these factors.

JIFFY CASTER AND CAMBER GAUGE. The front end alignment can be checked with the jiffy caster and camber gauge with turning angle plates available through the Hinckley-Myers Company of Jackson, Michigan.

When these are used it is important that the car is level. A level section of the floor should be marked with zone line paint for the position of the front wheels while checking. Wooden blocks 1-1/4" thick should be placed under the rear wheels to compensate for the height of the turning angle plates.

See "Checking Caster Angle" for procedure and "Checking Camber Angle" for procedure.

CAMBER is the outward tilt of the wheels at the top and brings the bottom of the wheel more nearly under the load.

Always make the "General Inspection," on page 240, before checking or adjusting camber angle.

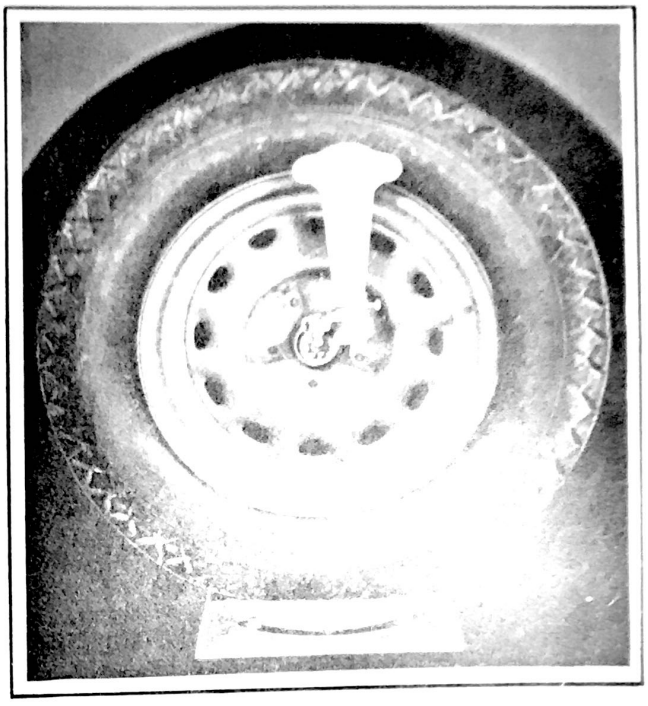

Figure 306 - Jiffy Gauge and Turn Plate in Starting Position

The weight of the car must be on the wheels and the tires properly inflated. The car must also be level crosswise. Always rock the car back and forth several times and allow it to settle before checking the camber. Do not rock at the bumper but at the side of the car. See General Inspection and check the wheel and tire run-out - Chassis Section, and place the point where the run-out chalk mark is the heaviest on the tire toward the front or rear of the car.

The amount of toe-in depends upon camber and, therefore, the toe-in should be considered every time camber is checked or corrected. See "Checking Toe-in" on page 245.

No camber correction should be made before the caster angle and pivot pin inclination have been checked.

See "Camber, Caster and Steering Pivot Pin Correction" for adjustment and Fig. 307, for details of checking camber angle.

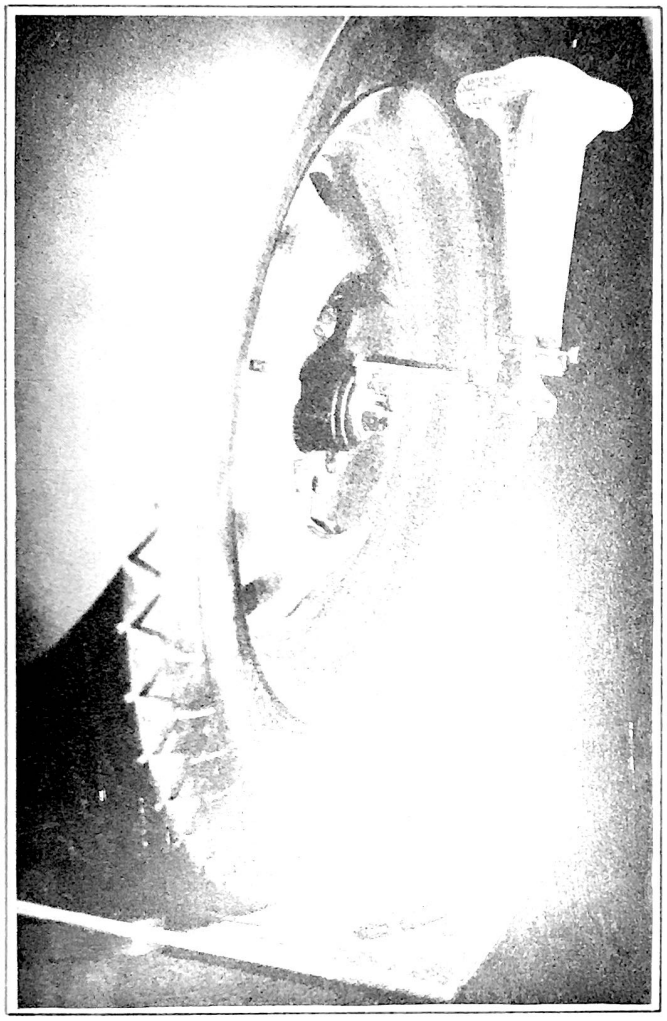

Figure 307
Jiffy Gauge-Checking Camber

PIVOT PIN INCLINATION is the inward tilt of the pivot pin at the top.

Before checking pivot pin inclination Always perform the operations under "General Inspection" on page 240.

When checking the pivot pin inclination angle it is necessary that all readings be taken with the weight of the car on the wheels, tires properly inflated and the car level crosswise. Rock the car sidewise several times before starting any check - do not rock the car at the bumper.

Pivot pin inclination should be $4^{\circ}36'$. The difference from one side to the other should not be over $1/2^{\circ}$. See Fig. 329, also Camber, Caster, Pivot Pin Inclination.

Pivot pin inclination can be checked very accurately with tool J 800-A, Fig. 308, used along with two full floating turn tables.

Incorrect pivot pin angle indicates bent suspension arms of steering spindle supports.

CAMBER AND PIVOT PIN INCLINATION CHECKING WITH JIFFY GAUGE.

1. Set wheels in a straight ahead position and adjust scales on turning angle plates to zero.

2. Remove outer and inner hub caps from front wheels.

3. Remove left hand spindle nut and washer and install jiffy caster and camber gauge as shown in Fig. 306, so that level bubble is between gauge lines when pointer is set at zero.

4. Turn the head of the jiffy gauge so that it is parallel to the axle as shown in Fig. 307, with wheels still straight ahead and adjust the pointer with the thumbscrew until the level bubble is between the lines on the glass. The reading taken on the lower scale is the camber of the left wheel. A reading toward the wheel is positive and away from the wheel is negative camber; THE CORRECT CAMBER IS $1/4^{\circ}$ TO $3/4^{\circ}$ POSITIVE.

If camber is insufficient or reversed, check pivot pin inclination as follows:

5. Turn the head of the jiffy gauge parallel to the wheel as shown in Fig. 308, and turn wheels to left until pointer on left turning angle plate points to 25°.

6. Set pointer on zero and turn gauge on spindle until level.

7. Turn left wheel to the right 25° and adjust level. The pointer reading on the top scale is the pivot pin inclination. THE CORRECT PIVOT PIN INCLINATION IS 4° 36'.

NOTE: If the pivot pin inclination and the camber are off in approximately the same amount (for example, camber 1/4°, pivot pin inclination 4°), it is probably due to worn pivot pin bushings. If camber is off and pivot pin inclination is correct, the spindle is bent. Camber should not be more than the specified 3/4°; however, a decrease in camber, if pivot pins are not loose in the bushings, is not detrimental to steering unless an actual reverse camber exists.

CASTER ANGLE is formed by the backward tilt of the pivot pin at the top with a vertical line.

Before checking caster follow "General Inspection" on page 240.

The weight of the car must be on the wheels with the tires properly inflated and the car level lengthwise. Always rock the car back and forth several times and allow it to settle before checking the caster. Do not rock at the bumper but at the side of the car. *No caster correction should be made until after the camber angle and pivot pin inclination angle have been checked.*

See "Camber, Caster and Pivot Pin Inclination Correction" also Fig. 307 for details of checking camber angle.

When checking the caster the wheels should be turned on their bearings to bring the high spot or that portion of the tire with the greatest run-out toward the front or the rear. See "Wheel and Tire Run-out," Chassis Section.

The amount of caster a front end requires depends on the friction in the spindle pins, tie rod ends and the steering linkage. A well-lubricated car requires less caster than one infrequently lubricated.

CASTER CHECKING WITH JIFFY GAUGE.

1. Turn the wheels back to the straight ahead position and reset the jiffy gauge as in paragraph 3, see Fig. 306 and 307.

2. Turn the wheels to the right until the pointer on the left turn plate is at 25°, level the gauge with the adjusting screw and take the reading of the pointer on the upper scale.



Figure 308 - Jiffy Gauge-Checking Caster-First Position

3. Turn the left wheel 25° to the left and level the gauge and take the reading on the upper scale (Fig. 309). If both readings are on the same side of zero, subtract the one from the other to get the caster angle of the left wheel. If the two readings are on opposite sides of zero, add them to get the caster angle. Readings toward the wheel are positive and away from the wheel are negative caster angle.

4. Repeat operations 3 to 7 under "Camber and Pivot Pin Inclination Checking

with Jiffy Gauge" and 1-3 (above) on the right wheel, turning the wheels so that the pointer of the right turn plate reads 25° to the right for the first caster reading, Fig. 308, and 25° to the left for the second caster reading, Fig. 309.

The correct caster settings are as follows - 0° preferred with plus 1/4° to minus 1/4° permissible and should not vary more than 1/2° between both front wheels.

CAMBER, CASTER AND STEERING PIVOT PIN INCLINATION. If camber is incorrect the inclination of the pivot pin should be checked - See Fig. 329 Pivot pin inclination is 4°36'.

If pivot pin angle is incorrect it indicates bent suspension arms or steering spindle supports which have a direct effect on the camber.

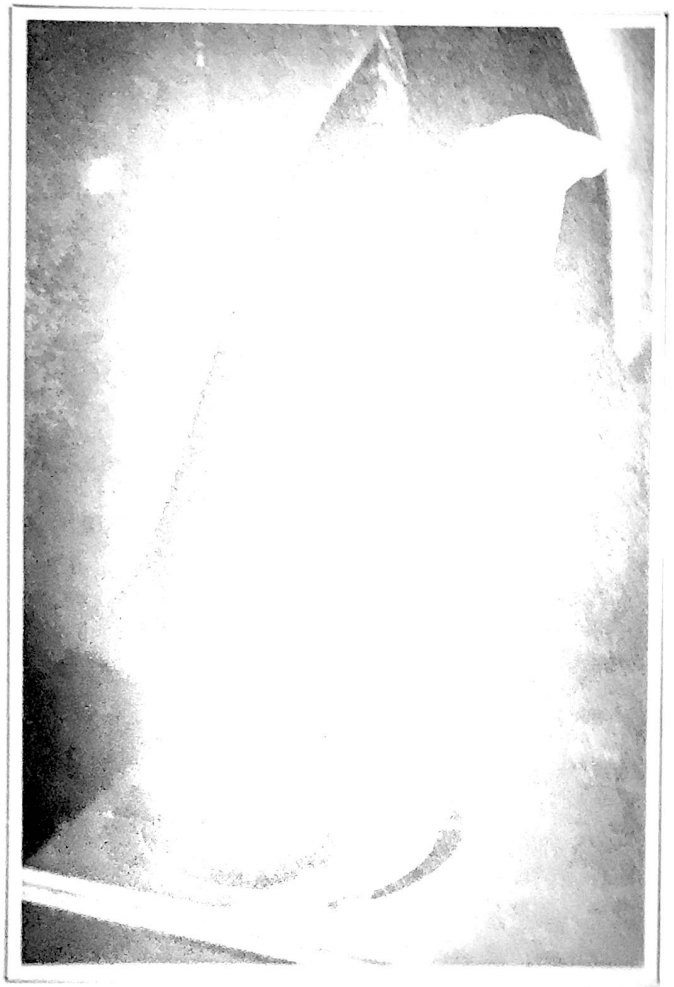

Figure 309 - Jiffy Gauge Checking Caster Second Position

Replace any bent parts and check the steering geometry whenever new parts are installed because new parts may affect the turning angle of the wheels.

If the camber and the pivot pin inclination are found to differ from the recommendations given in "NOTE," page 243, by approximately the same amount it is an indication that the camber and pivot pin inclination can be corrected with the camber and caster eccentric bushings.

Whenever the eccentric bushing is turned, the caster, camber and pivot pin inclination must be checked as all three are affected by it.

It is seldom necessary to turn the eccentric bushing over a half turn to obtain 1/2° for camber and this half turn should be all that is ever necessary for camber adjustment and give a minimum of caster change.

If camber is increased, pivot pin inclination is decreased and if camber is decreased pivot pin inclination is increased.

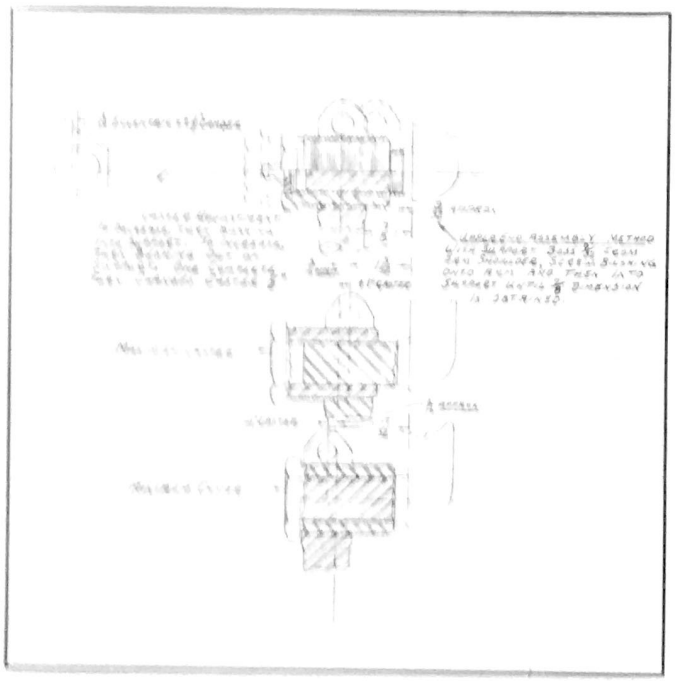

Figure 310 - Caster Adjustment

NOTE: Turning eccentric bushing into the support decreases caster. Turning eccentric bushing out of the support increases caster. One complete turn of eccentric bushing changes caster 1/2°. First set caster to 0 preferred with 1/4° negative or 1/4° positive permissible but in equal amounts on both wheels if possible but never over 1/2° variation Right and Left. Set camber with the least possible change of caster. Set camber to 1/4° to 3/4° with normal top of the frame horizontal. The car should have oil, gasoline and water but no passengers (curb weight).

Always rock the car back and forth several times and allow it to settle before checking or adjusting caster or camber or pivot pin inclination. The purpose of this is to relieve any tension in the front end suspension or in the tires.

DO NOT ROCK AT THE BUMPER BUT AT THE SIDE OF THE CAR.

TOE-IN is the setting or adjustment of the front wheels by means of tie rods, so that the distance between the wheels is less at the front than at the rear. Camber tends to cause the wheels to run out or separate at the front and sufficient toe-in is necessary to compensate this tendency and make the wheels run straight.

Accurate toe-in is of great importance in obtaining the maximum of tire life. Toe-in must be within definite limits of 0" to 1/16" measured on the complete car at the wheel rim.

Make the "General Inspection" on page 240 before attempting any check or adjustment of toe-in.

The weight of the car must be on the wheels and the wheels and tires made to run as true as possible regardless of the method to be used in measuring the toe-in.

When making the adjustment or check, the rear end of the center steering arm should be exactly at the center (crosswise) of the car. Use tool J 1442, Fig. 311, which attaches to the under side of the frame cross member and is used to centralize the steering center arm in relation to the exact center line of the car. This tool is also used to adjust toe-in and makes possible the setting of the steering center arm on dead center, setting the steering gear on the high point for the straight ahead position.

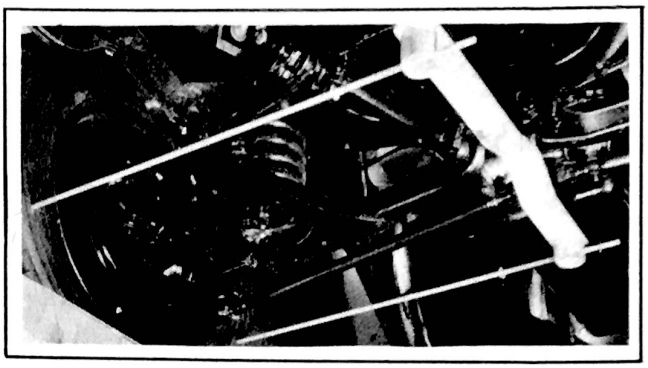

Figure 311 - Checking Toe-In and Centralizing Steering Center Arm with Tool J-1442

To install the gauge remove the center steering arm retainer nut and attach body of tool to under side of frame cross member. Loosen the tie rod end clamps. Place rods of tool against the side walls of tires. To increase the toe-in, turn the tie rods in the direction of wheel travel and to decrease, turn in the opposite direction. When the correct setting is obtained tighten the tie rod end clamps and remove the gauge. Replace the center steering arm retainer nut. Always rock the car back and forth sidewise several times and then let it settle. This relieves any tension in the front suspension system or in the tires.

When checking the toe-in, the front wheels should be in the straight ahead position and in cases where the measurements are taken from the side of the tire the wheels must be turned on their bearings so as to bring the high spot or that portion of the tire with the greatest amount of run-out either at the top or the bottom of the wheel.

Toe-in is adjusted by means of the tie rods which are of equal length. Tie rod ends are removable - see Tie Rod End, page 257.

If the toe-in is seriously out it will indicate a possible bent steering spindle arm.

Toe-in must be corrected before checking toe-out on turns.

Turn both tie rods an equal amount to retain the same distance between the rear end of the center steering arm and the front wheels.

Steering geometry or toe-out on turns is controlled by the movement and angularity of the tie rods.

Toe-out of the front wheels should be as shown under "adjustment of steering geometry".

When the front wheels are turned to the right or left they separate slightly at the front depending upon the amount of deflection from the straight ahead course. The wheel making the inside circle turns at a greater angle than the outside wheel thus making toe-out necessary on curves. *The amount of toe-out increases as the turn increases due to the change in angle between the tie rods.*

The toe-out is checked by turning the wheels to the right or left, locating the inside wheel in a definite position.

Errors in the setting of the outside wheel are due to bent tie rods. *When the tie rods are bent the wheels will not turn in their proper relation on curves. This will affect the toe-out and result in excessive tire wear.* Straight ahead driving will not be affected. When the tie rods are badly bent they should be replaced with new ones. Always check the steering spindle support and support arm to determine if they are bent; the caster and camber if they are correct and equal on both sides; the toe-in; and the front and the rear wheels for being parallel before changing tie rods or the steering arm.

Always rock the car back and forth several times before making any checks or adjustments. Do not rock at the bumper but at the side of the car.

STEERING GEOMETRY must always be checked with the weight of the car on the wheels.

Front wheels must rest on full floating turn tables and the turning angles should read as follows:

Left Turn

Left Wheel	Right Wheel
30°	25°

Right Turn

Left Wheel	Right Wheel
25°	30°

The variation between the left and right wheel angle must not vary more than 30 minutes plus or minus.

SETTING STEERING ON DEAD CENTER. To properly set the center steering arm, disconnect the drag link at the pitman arm, attach tool J 1442, Fig. 311, on the center steering arm mounting bolt using the threaded bushing and insert the pin in the hole provided for it in the frame cross member.

The clip on the tool snaps around the center steering arm and holds it in line with the center line of the car.

Set steering gear on its high point, see "Setting Front Wheels in Straight Ahead Position," Steering Section.

Toe-in can be checked at the same time with this tool in the position described above - see page 245.

STEERING GEAR HIGH POINT. The setting of the front wheels in a straight ahead position is given under "Steering Gear" group.

FRONT WHEEL SUSPENSION REMOVAL for assembly replacement may be done as follows:-

Raise car and place stand jacks under inner ends of the lower support arms.

Remove wheel and hub assembly. Remove brake backing plate and place so as not to injure the brake hose. Remove steering arm using tool J 1373. Remove shock absorbers. Remove lower support arm pivot to frame bolts. Raise car, allowing coil springs to expand and remove the springs. Remove upper support arm pivot to frame bolt nuts. Remove front wheel suspension assembly.

FRONT WHEEL SUSPENSION - REPLACING. Replace assembly and fasten upper support arm pivot to frame cross member securely. Replace spring making sure flat end is to the top and rests in the frame cross member. Also be sure open end of spring rests in the stamped recess in the lower support arm. Lower car which will compress spring and replace lower support arm pivot to frame bolts and tighten securely. Replace shock absorber. Replace steering arm. Replace backing plate. Replace wheel and hub assembly. Remove car from stand jack and lower car to floor. Adjust caster, camber and toe-in.

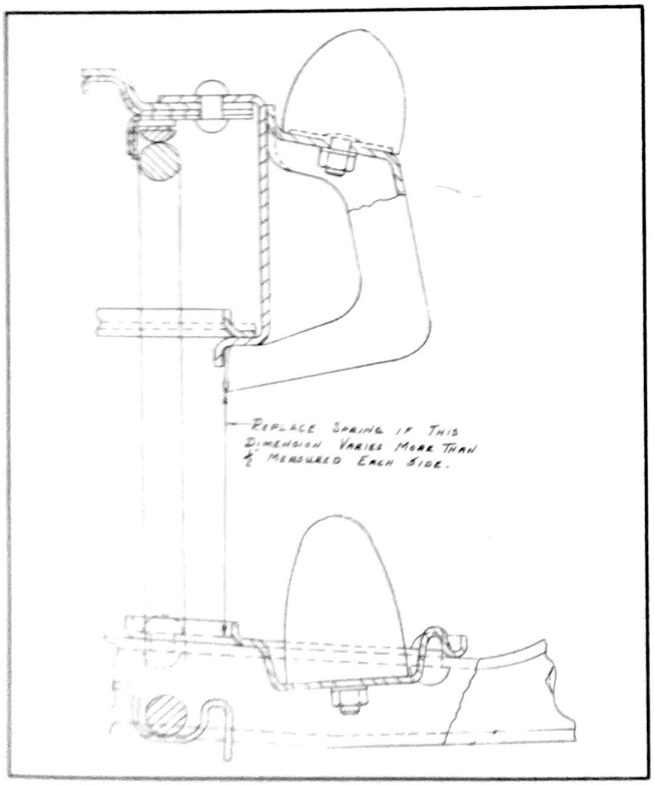

Figure 312 - Riding Height or Spring Sag Dimensional Check

RIDING HEIGHT. Where the car does not seem to be level and a check of the coil spring height is desired, proceed as follows:

Place the car so that the front end is level crosswise and then rock the car sidewise several times - not at the bumper but rock it at the center - and allow it to settle. This will remove any binding that might cause a dimensional difference.

Measure the distance from the top of the seat from the lower support arm rubber bumper (Fig. 312) to the bottom of the bracket (Fig. 312) which is for the upper rebound rubber and is riveted to the frame.

Measure the distance on the other side.

If the two measurements are not approximately the same, a shim that is .120" thick can be added at the top of the coil spring.

If more than two shims are required, it is advisable to replace the coil spring.

COIL SPRING SAG is measured as shown in Fig. 312 at curb weight.

Rock the car sidewise several times before making any measurements. Do not rock car at the bumper.

An insulator or silencer made of rubber and fibre is assembled in the upper seat in frame front cross member.

A shim .120" thick can be used at the top of the coil spring for adjustment of Riding Height.

The coil springs are all identified after inspection by marking them in the following manner.

Part No.	Color Identification	Load at Pass. Height	Rate	Models
162530	Brick Red	1396	253	10,11,12
162531	Pink	1456	290	18
162532	Violet	1630	290	14,15,17 Right Side
162533	Steel Gray	1735	290	Left Side

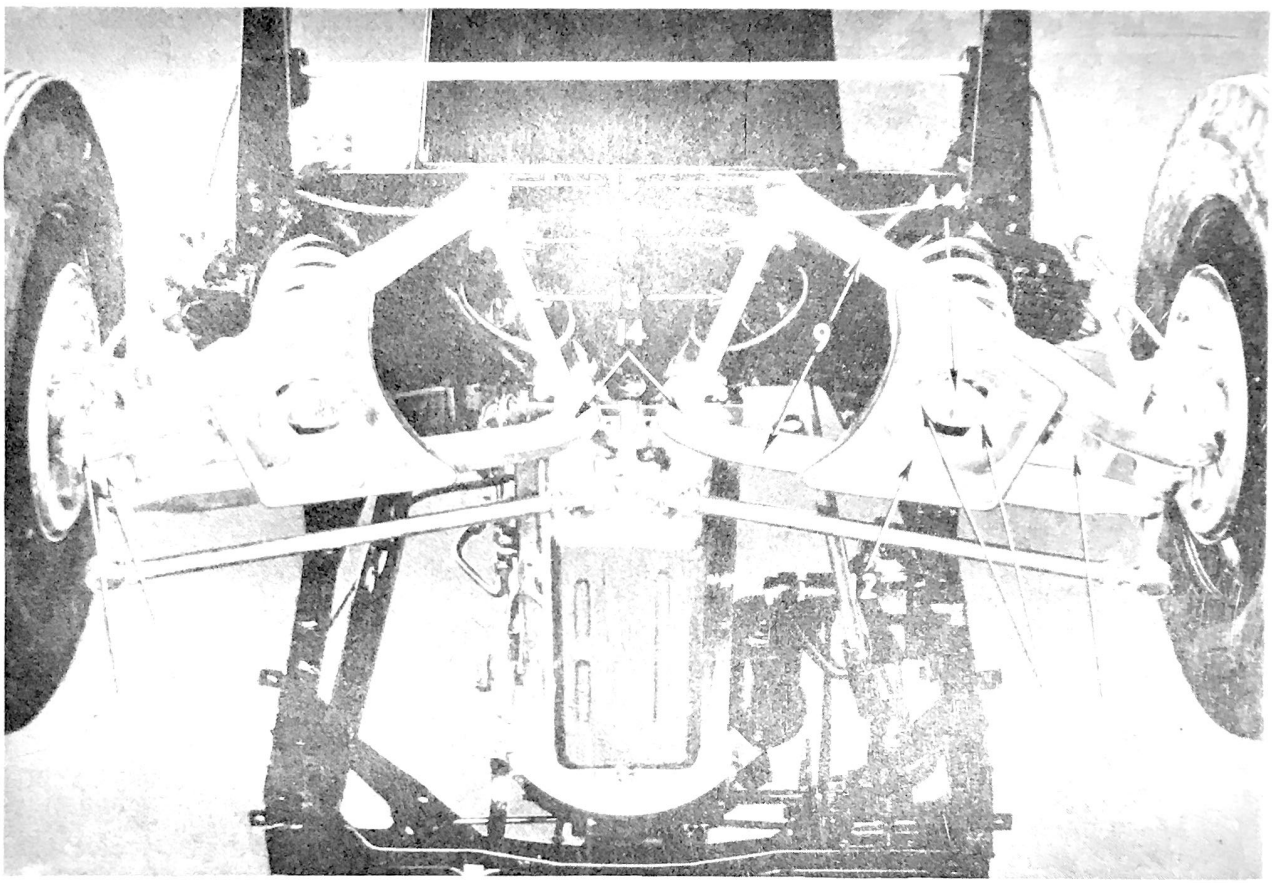

Figure 313 - Front Suspension Detail

9. Lower support arm assembly
11. Lower support arm rubber bumper stud
12. Lower support arm spring seat
13. Lower support arm pivot
14. Lower support arm pivot seal
15. Lower support arm pivot bushing front
16. Lower support arm pivot to frame bolt
17. Lower support arm to spindle support pivot
18. Lower support arm to spindle support bushing
44. Shock absorber lower mounting plate
45: Shock absorber lower mounting nuts

Brinell mark, part number and limit marks show on flat end of each spring. *A light limit spring has one grind mark and a heavy limit spring has two grind marks.* Use heavy limit springs on the driver's side.

FRONT COIL SPRING REMOVAL. Jack front wheels clear of the floor. Place a stand jack under the inner side of the lower support arm (9), Fig. 313, on the side that the spring is being removed from. Lower car until it touches the stand. Remove shock absorber. Remove the four bolts (16) that fasten the lower support arm pivot (13) to the frame cross member at the inner end of the lower support arm (9). Raise car carefully, thus allowing the coil spring to expand and drop out of place.

The coil spring is under heavy pressure and care must be exercised in releasing it.

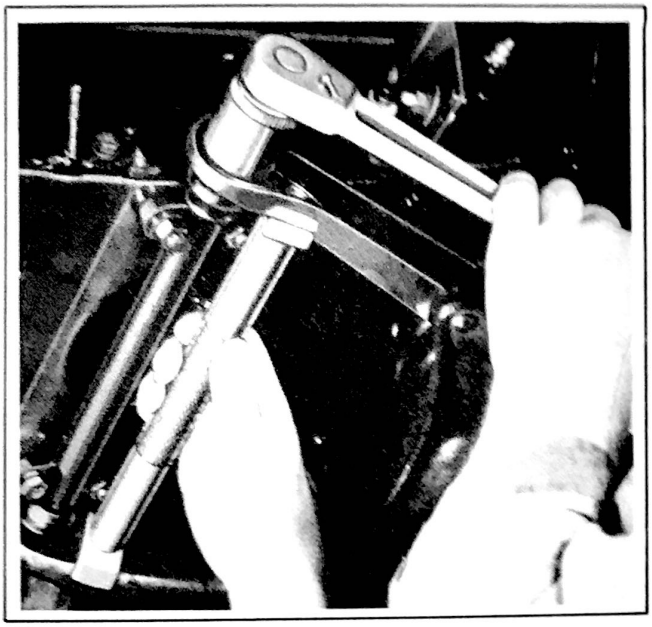

Figure 314 - Maintaining Lower Support Alignment Using Tool J-1052

FRONT COIL SPRING REPLACING is a reverse of the above procedure. Check these points -

Flat end of spring must be at top. Bottom end must rest in the seat stamped in the lower support arm spring seat (12), Fig. 313. Silencer material must be in the upper spring seat. Check "Riding Height" and use shims if necessary. If installing a new spring be certain it is the correct one. Coil springs are all identified.

FRONT SHOCK ABSORBER REMOVING. Remove top retainer nut, washer and rubber bushing. Remove the two screws (45), Fig. 313, holding shock absorber anchor plate (44) to the lower support arm (9). Turn the shock absorber one fourth turn and lower through the opening.

FRONT SHOCK ABSORBER INSTALLING. Reverse above procedure.

LOWER SUPPORT ARM REMOVING. Perform the operations of removal of FRONT coil spring. Remove the lower support arm outer pivot (17), Fig. 313.

LOWER SUPPORT ARM REPLACING. Install front coil spring. Install all lower support arm pivot to frame bolts (16), Fig. 313. Install the lower support arm outer pivot (17).

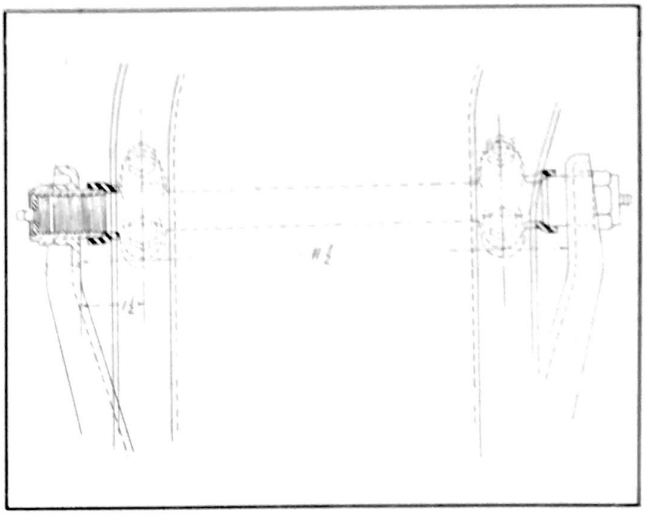

Figure 315 - Lower Support Arm Bushing

LOWER SUPPORT ARM PIVOT AND BUSHING REMOVAL. Jack front wheels clear of the floor. Place stand jack under inner side of lower support arm (9), Fig. 313. Remove front (15) and rear bushings of the lower support arm pivot (13). Remove the four nuts (16) that hold lower pivot to front cross member. Remove lower pivot (13) from lower support arm (9).

NOTE: Use tool J 1052, Fig. 314, to maintain the exact distance of 11-1/2" between the inner faces of support arms and an exact distance of 1-1/2" between the inner face of support arm and the center line of the nuts holding the pivot to the cross member. These distances must be maintained.

LOWER PIVOT PIN AND BUSHING REMOVING. Place a jack under the lower support arm (9), Fig. 313, and raise the car off the floor. Remove cotter pin, nut and washer from the pivot pin (17). Remove the lower pivot pin (17) and bushing.

LOWER PIVOT PIN AND BUSHING REPLACING. Hold the steering spindle support (5), Fig. 316, squarely between the yoke (formed

by lower support arm) (9). Install the outer pivot pin (17) and index the pin so that the spindle support (5) is centralized between the inner faces of the outer end of the lower support arm (9). Screw the outer pivot pin (17) in place. Install the washer, the nut, and the cotter pin. Check caster, camber and toe-in.

UPPER STEERING SPINDLE SUPPORT ARM AND PIVOT REMOVING. Jack up car so that wheels are clear of the floor. Remove wheel and hub assembly. Remove shock absorber retaining nut (43), Fig. 317,

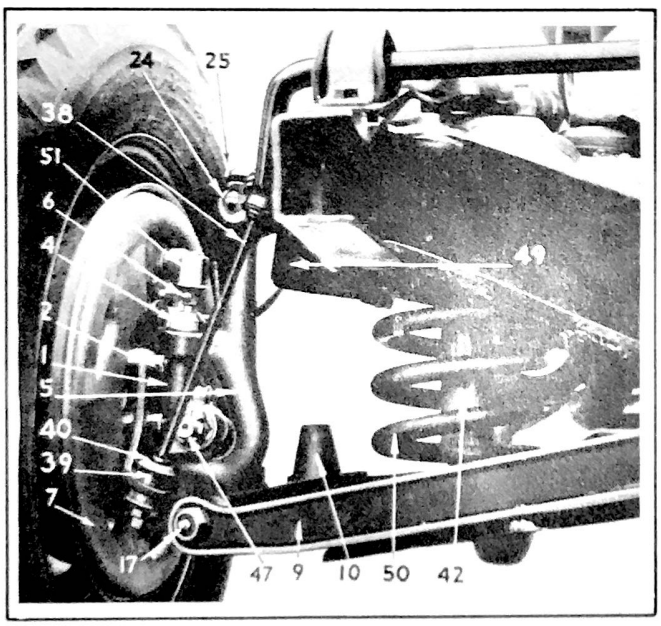

Figure 316 - Front Suspension Detail

1. Steering spindle
2. Steering spindle to backing plate bolt
4. Steering spindle pivot pin upper bearing
5. Steering spindle support
6. Steering spindle pivot pin grease fitting
7. Front wheel brake backing plate
9. Lower support arm assembly
10. Lower support arm rubber bumper
17. Lower support arm to spindle support pivot
24. Upper support arm eccentric bushing
25. Upper support arm eccentric bushing lock screw
38. Auto-poise connector
39. Auto-poise connector cushion
40. Auto-poise connector cushion retainer
42. Shock absorber
47. Steering arm

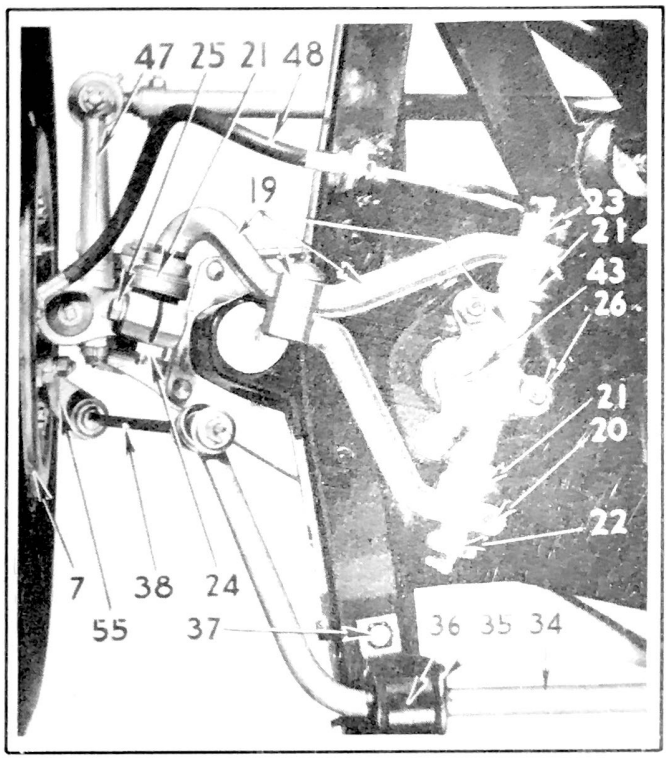

Figure 317 - Front Suspension Detail

7. Front wheel brake backing plate
19. Upper support arm and pivot assy.
20. Upper brace clamp bolt
21. Upper support arm pivot seal
22. Upper support arm pivot front bushing
23. Upper support arm pivot rear bushing
24. Upper support arm eccentric bushing
25. Upper support arm eccentric bushing lock screw
26. Upper support arm pivot to frame bolt
34. Auto-poise bar
35. Auto-poise rubber bushing
36. Auto-poise bracket
37. Auto-poise bracket bolt
38. Auto-poise connector
43. Shock absorber upper stud nut
47. Steering arm
48. Front wheel hydraulic brake line
55. Auto-poise connector bracket-on steering spindle

at top of pivot. Remove the three cap screws (26) holding pivot to cross member. Remove eccentric bushing (24). Remove upper steering spindle support arm and pivot (19).

NOTE: The eccentric bushing is removed by removing lock screw (25), Fig. 317, and unscrewing eccentric bushing off from the upper arm. Check caster and camber after replacing. Use tool J 1360 in re-installing the pivot bushings (22 and 23).

Place tool on the outer stud (26) of the pivot and locate the bushing so that the pivot is central with the tool.

UPPER SPINDLE SUPPORT ARM PIVOT FRONT BUSHING REMOVING. Jack up car so that wheels are clear of the floor. Remove upper arm bushing clamp bolt (20), Fig. 317. Screw bushing (23) off of the pivot.

NOTE: Use tool J 1360 in reinstalling the bushing. Place the tool on the outer stud of the pivot (26), Fig. 317, and locate the bushing so that the pivot is central with the tool.

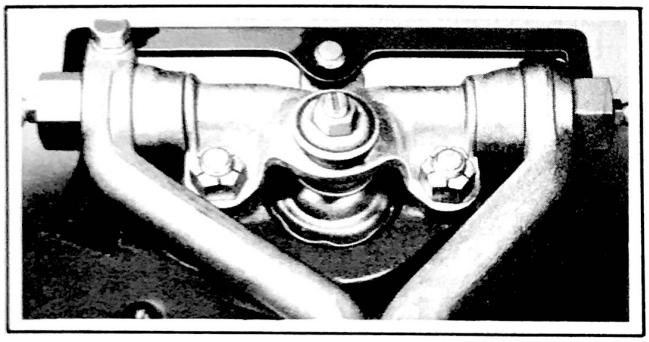

Figure 318 - Locating Pivot Bushing With Tool J-1360

UPPER SUPPORT ARM PIVOT REAR BUSHING REMOVAL. Jack up car so that wheels are clear of the floor. Screw bushing (22) Fig. 317, out of upper support arm and off the pivot arm.

NOTE: Use tool J 1360 in reinstalling the bushing. Place tool on the outer stud (26), Fig. 317, of pivot and locate the bushing so that pivot is central with the tool.

ECCENTRIC BUSHING REMOVING. The eccentric bushing (24), Fig. 317, can be removed by: Placing jack under lower support arm and raise the car off from the floor. Remove the eccentric bushing lock screw (25). Remove the bushing from the steering spindle support and upper support arm.

Do not remove brake hose but protect it against possible damage by fastening the spindle support to the rebound bumper bracket.

ECCENTRIC BUSHING REPLACING. Hold the steering spindle support 9/32" away from the boss on the upper support arm. See Fig. 310. Screw the eccentric bushing onto the upper support arm until it starts to enter the steering spindle support. Continue turning the eccentric onto the upper support arm until this upper support arm is located 7/8" from the boss. See Fig. 310. This setting should give a zero caster and a zero camber and two complete turns (3/16") of the eccentric bushing into the steering spindle support would give a plus 1° of caster and two complete turns (3/16") out of the spindle support would give a minus 1° of caster.

The correct caster setting is 0 preferred with $1/4^{o}$ negative or $1/4^{o}$ positive permissible but in equal amounts on both wheels if possible but never over $1/2^{o}$ variation between right or left sides.

See Camber, Caster and Steering Pivot Pin Correction page 244.

Set Camber and Caster - See page 244. Install eccentric bushing locking screw and tighten securely.

LOWER SUPPORT ARM RUBBER BUMPER REMOVING AND REPLACING. Remove the cap screw nut and shakeproof washer. Lift the bumper out of position. To replace - reverse procedure.

FRONT SUSPENSION UPPER RUBBER BUMPER (ON FRAME) REMOVING AND REPLACING. Remove the cap screw nut and shakeproof washer. Lift the bumper out of position. To replace - reverse procedure.

STEERING PIVOT PIN LOOSENESS. Adjust the front wheel bearings before starting any check for looseness in the pivot pin or its bushings.

Jack up the front of the car so that the wheels are clear of the floor.

Place one hand on the top of the tire and the other hand on the bottom of the tire.

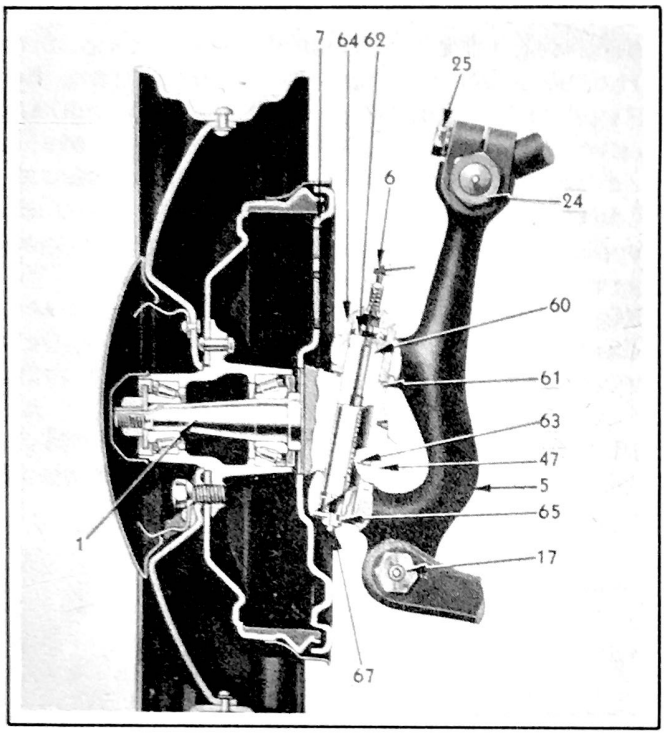

Figure 319 - Steering Spindle Section

1. Steering spindle
5. Steering spindle support
6. Steering spindle grease fitting
7. Brake backing plate
17. Lower control arm pivot bolt
24. Eccentric bushing
25. Eccentric bushing lock screw
47. Steering arm
60. Pivot pin
61. Pivot pin oil seal
62. Pivot pin thrust balls
63. Pivot pin key
64. Pivot pin thrust washer and ball cup
65. Pivot pin bushing
67. Expansion plug and relief valve

Alternately pull with one hand while pushing with the other so as to determine the amount of play between the pivot pin and its bushings.

If there is an appreciable amount of movement in and out at the top of the tire the bushings should be replaced.

STEERING SPINDLE PIVOT PIN REBUSHING KIT has been made up for convenience in replacing worn pivot pins and bushings.

Wear at the spindle pivots is very seldom confined to one part and it is advisable, therefore, to renew the parts on both sides.

The Rebushing Kit Part No. 159519 contains:

2 Pivot pins
2 Pivot pin bushings
2 Pivot pin thrust washers and ball cups
14 Pivot pin balls
4 Pivot pin oil seals
2 Pivot pin key seals
2 Pivot pin expansion plugs and relief valve assemblies.

NOTE: The pivot pin key seal is made of lead and is used with the key that holds the steering arm to the steering spindle. This key also holds the pivot pin and the lead seal prevents lubricant being forced down the outside of the pivot pin into the key way and then outside to cause loss of lubricant.

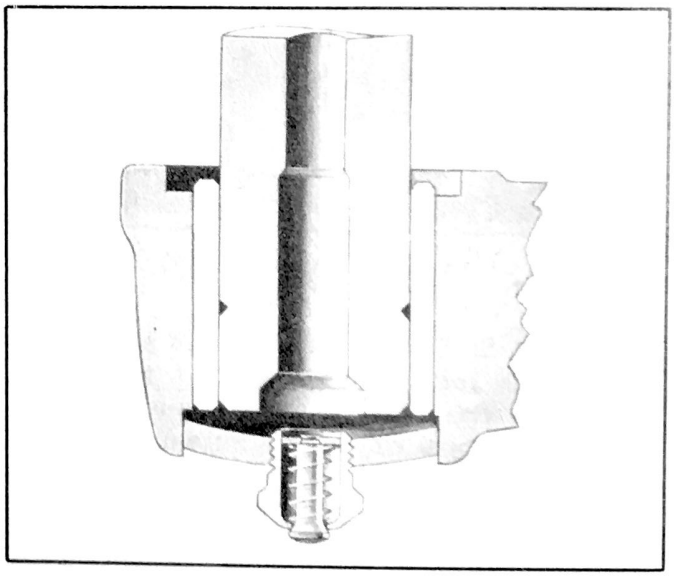

Figure 320 - Steering Spindle Pivot Pin Relief Valve

Figure 321 - Steering Spindle Pivot Pin Reservoir Type Grease Fitting Models 14, 15, 17

STEERING SPINDLE PIVOT BOLT EXPANSION PLUG AND RELIEF VALVE - Fig. 320. A grease pressure relief valve is fitted into the expansion plug at the bottom of the steering spindle pivot bolt.

This is to relieve excessive grease pressure (500 to 600 lbs. per square inch) that may be applied at the grease fitting at the top of the plug. This prevents

grease from leaking out around the expansion plug and any possibility of the grease pressure blowing it out.

The spring on the relief valve is heavier than the one in the upper fitting so that the reservoir will be filled before the valve opens.

When lubricating spindle pivot pins, always continue supplying grease until it comes out of the valve. This will assure the filling of the reservoir and the removal of all air from the passages which might cause an air lock in the passages.

To install the expansion plug and relief valve -

1. Leave the relief valve in the expansion plug.

2. Coat edges of expansion plug with white lead.

3. Use a short piece of tubing or hollow pipe that will clear the relief valve and place it over the relief valve and against the plug.

STEERING PIVOT PIN GREASE RESERVOIR. A 90° reservoir type of grease fitting, Fig. 321, is used on models 14,15,17 and a 67-1/2° grease fitting, Fig. 319 not of the reservoir type, is used on all other models.

When grease is supplied to the reservoir type fitting, Fig. 321, it flows into the spindle pin bushing and also into the reservoir, pushing the leather piston upward against its spring. As additional lubricant is needed the spring forces the plunger down, delivering the lubricant from the reservoir to the bearings.

STEERING SPINDLE REMOVING. Jack front wheels clear of the floor. Place a stand jack under the outer side of the lower support arm and if both spindles are to be removed, place stand jack under both lower support arms. Pry off front wheel

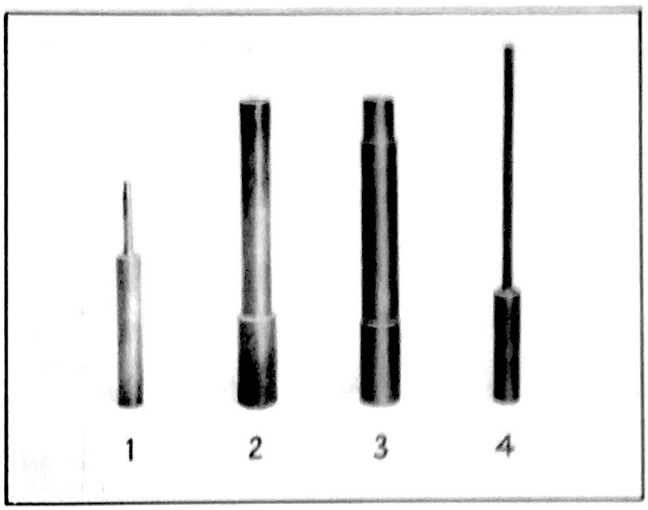

Figure 322 - Steering Spindle Pivot Pin and Bushing Removing and Replacing Set

1. J-479=1 Driver for loosening pivot pin
2. J-469-1 Driver for installing lower bushing
3. J-990 Driver for removing lower bushing and installing upper bushing
4. J-4/9-2 Driver for removing pivot pin

hub cap. Remove inner cap with tool J 728 A. Remove steering spindle nut cotter pins. Remove steering spindle nuts, spindle washer, outer bearing cage, front wheels and brake drum assemblies. Remove the nuts from the four bolts holding brake backing plate (7), Fig. 316, to the spindle. Push Auto-Poise connectors (38), Fig. 316, out of the way. Remove brake backing plate (7) and place it or wire it to the front suspension upper arm assembly. Remove key, nut and washer holding the steering arm (47) to the steering spindle (1). Drive steering arm (47) out of steering spindle (1) with tool J 1373. Remove cotter pin, nut and lower control arm pivot bolt (17). Remove eccentric bushing locking screw (25) and bushing (24). Remove steering spindle (1) and steering spindle support (5) together. Remove grease fitting (6) at the top of steering spindle (1). Drive pivot pin (60) from the top using tool J 479 (No. 1, Fig. 322) through the hole in the upper end of steering spindle left when the oiler was removed. The expansion plug and relief valve (67) at the bottom of the spindle will be forced out. Then insert the long driver tool J 479 (No. 4 in Fig. 322) and drive pivot pin (60) out.

CAUTION: Remove steering spindle pivot pin carefully so that the 7 ball bearings (62) will not be lost.

The removal of the steering spindle pivot pin separates the steering spindle (1) from the steering spindle support (5).

Reverse procedure for reassembly.

See page 254 under "Steering Spindle Installation" for adjustment procedure.

STEERING SPINDLE SUPPORT BUSHING AND THRUST BALL CUP REMOVING. Hold steering spindle support (5), Fig. 319, in a vise so that bushing can be forced out. Drive thrust ball cup (upper bushing) (64) out with a copper hammer. Insert driver tool J 990, Fig. 322, into the lower bushing (65) and drive it out.

STEERING SPINDLE SUPPORT BUSHING AND THRUST BALL CUP REPLACING. Support steering spindle support (5), Fig. 319, in a vise so that bushing (65) and thrust ball cup (64) can be driven in. Use the tool J 990 (No. 3 in Fig. 322) and install the thrust ball cup (upper bushing). Have the top of steering spindle support well supported. Use the tool J 990 (No. 3 in Fig. 322) and install the lower bushing. Have the bottom of steering spindle support well supported.

The bushing and thrust ball cup are hardened and ground and require no reaming after being installed. The thrust ball cup has the thrust washer for the ball bearing pressed into it.

STEERING SPINDLE SUPPORT REMOVING. Place jack under lower support arm (9) and raise front wheels clear of the floor. Remove outer hub cap, and inner hub cap, using tool J 728 A, outer wheel bearing, tire wheel and hub assembly and inner wheel bearing. Remove brake backing plate (7) and place on top of frame so as not to injure or disconnect hydraulic brake tube. Remove cotter pin nut and washer holding steering arm (47) to steering spindle (1). Drive steering arm (47) out of the steering spindle (1) with tool J 1373. Remove cotter pin, nut, and lower support arm outer pivot bolt (17). Remove eccentric bushing lock screw (25). Remove eccentric bushing (24) and steering spindle (1) with steering spindle support (5). Remove grease fitting (6). Drive pivot pin from the top using tool J 479 (No. 1, Fig. 322) through the hole in the upper end of the steering spindle left when the oiler was removed. The expansion plug and relief valve at the bottom of the spindle will be forced out. Then insert the long driver tool J 479 (No. 4 in Fig. 322) and drive the pivot pin out.

CAUTION: Remove steering spindle pivot pin carefully so that the 7 ball bearings will not be lost.

The removal of the steering spindle pivot pin separates the steering spindle (1) from the steering spindle support (5).

STEERING SPINDLE SUPPORT INSTALLATION. The reassembling of the steering spindle support on the car requires particular attention to two adjustments.

Lower pivot pin and its bushing.

Eccentric bushing - controlling the caster and camber setting.

The steering spindle support is held to the lower support arms by the lower pivot pin removed in operation 6. This steering spindle support must be squarely between the yoke formed by the lower support arms. In installing, index the pivot pin so that the spindle support is centralized between the inner faces of the outer end of the lower support arm.

The eccentric bushing controls the caster and camber setting and it must be installed as follows:

Hold the steering spindle support 9/32" away from the boss on the upper support arm. See Fig. 310, page 244.

Screw the eccentric bushing onto the upper support arm until it starts to enter

the steering spindle support. Continue turning the eccentric onto the upper support arm until this upper support arm is located 7/8" from the boss. See Fig. 310.

This setting should give a zero caster and a zero camber.

See "Eccentric Bushing Replacing" page 251.

Set caster and camber - page 245. Install the eccentric bushing locking screw and tighten securely.

FRONT WHEEL REMOVING. Place jack under lower support arm and raise front wheels clear of the floor. Remove hub cap, inner hub cap, spindle nut and washer. Remove wheel and hub assembly.

STEERING ARM REMOVING. Remove cotter key, nut and washer from steering arm. Remove tie rod cotter key and nut and remove the tie rod (tool HM 844 C). Remove steering arm (tool J 1373).

Tighten, with a torsion wrench, the steering arm nut to 105 foot pounds.

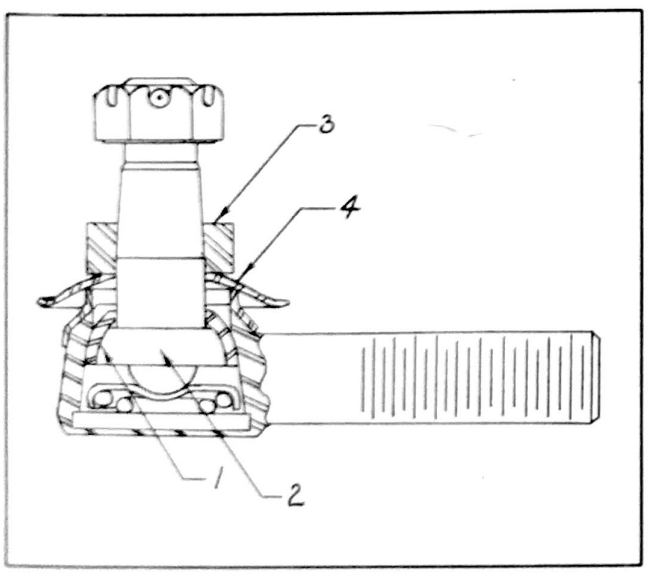

Figure 323 - Tie Rod End

1. Tie rod end bearing
2. Tie rod end stud
3. Tie rod end rubber seal
4. Tie rod end dust cover

TIE ROD ENDS are the self-adjusting type. The ground steel bearing (1), Fig. 323, is located between the stud (2) (which is prevented from loosening or rattling by the tension spring) and the tie rod end forging. A curved steel dust cover (4) makes a tight metal seal, but to insure this being as nearly dust proof as possible a rubber seal (3) also seals the unit.

The lubrication is by means of the pressure fitting and lubricating instructions are in the "Lubrication Section".

TURNING PULL. The amount of steering pull on the front wheels required to turn the wheels is measured with a spring scale hooked over the tread of the tire.

Disconnect drag link and place roller plates under the front wheels. Use a spring scale as described above.

Models 10,11,12,18 should require 26 lbs. maximum pull.

Models 14,15,17 should require 27 lbs. maximum pull.

If greater pull is required to turn the wheels, lubricate the spindle pivot pins and tie rod ends. If this does not reduce the pull required, remove the wheels and tie rod ends and check as noted on pages 257-258.

STEERING CENTER ARM REMOVING - 6 Cylinder Models. Remove drag link at front. See Steering Section. Remove tie rod ends (8) from steering center arm (28) using tool J-624 H - See Fig. 324. Remove bolt (30) holding steering center arm to frame cross member. Remove steering center arm.

NOTE: Bushings are pressed in and can be removed in an arbor press.

STEERING CENTER ARM REMOVING - 8 Cylinder Models. Raise the front of the car and place on stand jacks.

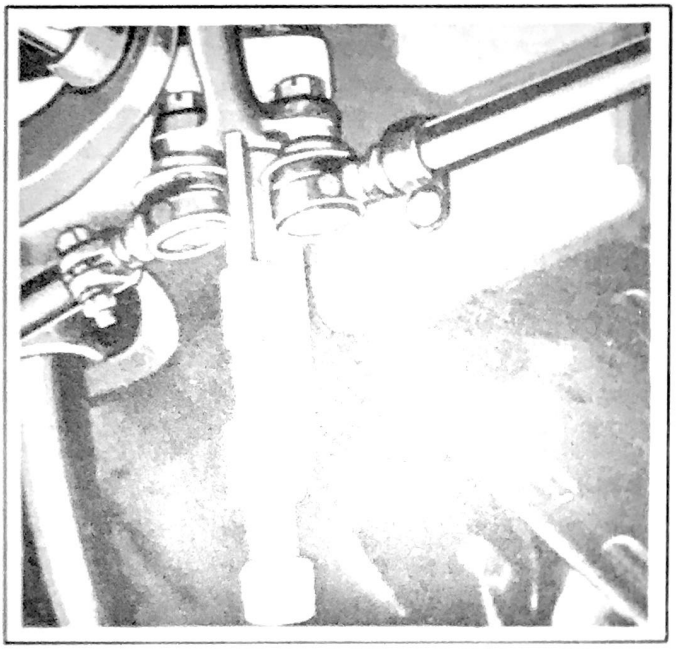

Figure 324 - Steering Arm Ball Stud Screw Press J-624-H

Remove the drag link at the front end by turning the wheels so that the drag link is in its farthest rear position and then remove the cotter key at the front ball and socket joint.

Move the drag link forward so as to enable the removal of the drag link adjusting plug and ball seat through the hole in the frame front cross member.

Remove the tie rod ends from the steering center arm with tool J 624 H, Fig. 324. Remove the steering center arm bolt nut. Remove the radiator louver panel center moulding. Remove the front bumper bracket bolts and allow the bumper to drop down. Loosen the generator mounting bolt and remove the fan belt. Unscrew the starting crank jaw. Place the jaw of the vibration dampener puller tool over the dampener and place the screw of the puller tool through the starting crank hole engaging with the threads of the puller jaw. Pull off the dampener just enough to obtain clearance for the removal of the center steering arm bolts. Remove the center steering arm bolt. It is necessary to raise the engine slightly to obtain clearance between the bolt head and the timing gear cover. Remove the center steering arm.

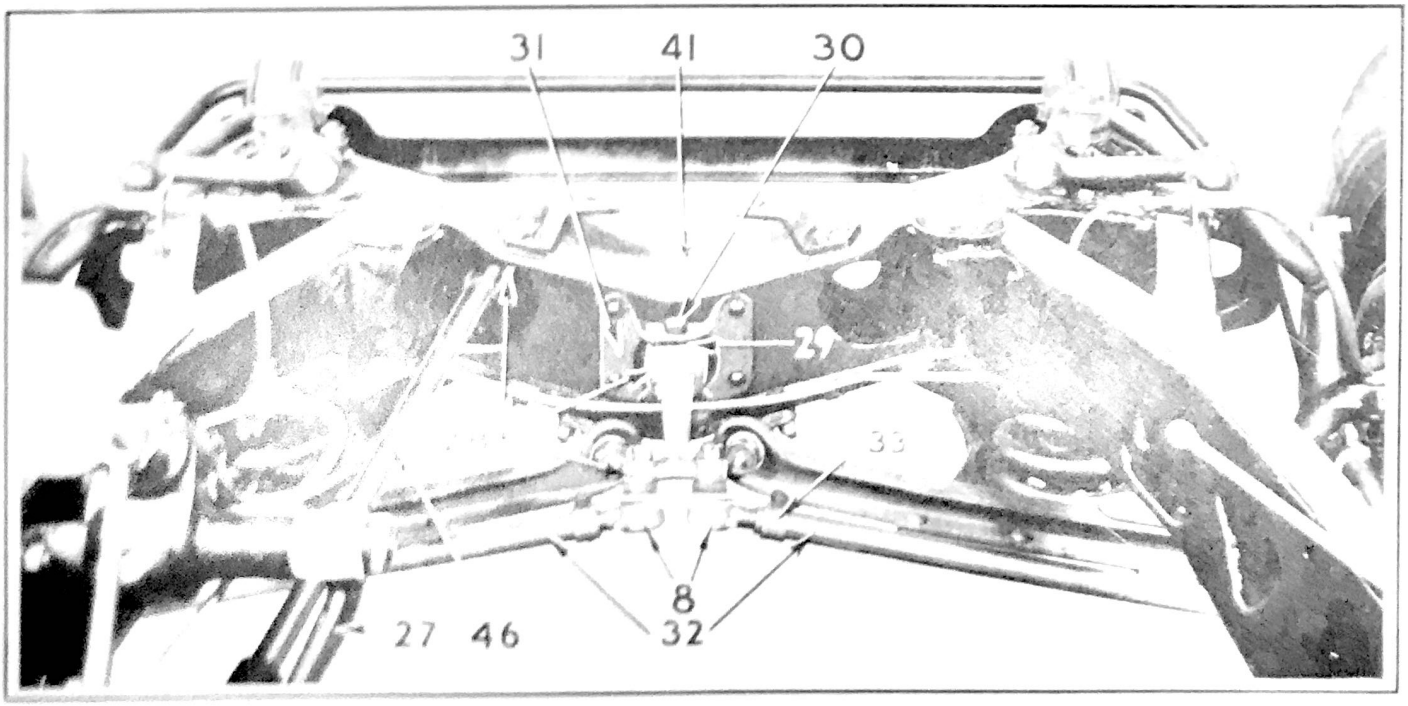

Figure 325 - Front Suspension Detail

8. Tie rod end
27. Steering pitman arm
29. Steering center arm
29. Steering center arm bearing
30. Steering center arm bearing bolt
31. Steering center arm bracket
32. Tie rods
33. Tie rod clamp
41. Frame front crossmember
46. Drag link

STEERING CENTER ARM REPLACING - 6 or 8 Cylinder - is the reverse procedure of removal.

Tighten the steering center arm bolt nut with a torsion wrench to 65 foot pounds.

TIE ROD END KIT is provided for convenience in ordering tie rod ends.

Tie Rod Kit contains:

Tie rod end assembly - Right
Tie rod end assembly - Left
With necessary clamps, bolts and nuts

The replacement of a tie rod end usually requires the replacement of both ends and this package has the parts necessary for a repair.

TIE ROD REMOVAL. Remove cotter key and nut from both ends of the tie rod. Use tool HM 844 C to remove outer end. Use tool J 624-H to remove inner end. See Fig. 324.

TIE ROD INSTALLING. It is necessary to adjust toe-in when installing tie rods. Reverse process or removal and then adjust toe-in.

STRAIGHTENING BENT PARTS OF FRONT SUSPENSION SYSTEM. Heat treated parts should not be straightened if they are sprung more than 5°. Parts that are not heat treated may be straightened cold if they are not sprung more than 10°.

If parts are sprung more than these amounts, any attempt to straighten will show strains and cracks that may not be visible if attempted while cold. Straightening hot may destroy the effect of the heat treating and may result in overheating, making the steel soft and weak, while underheating makes the part brittle and easily broken.

HARD STEERING. If the hard steering seems to be caused by tightness in the steering mechanism the cause may be -

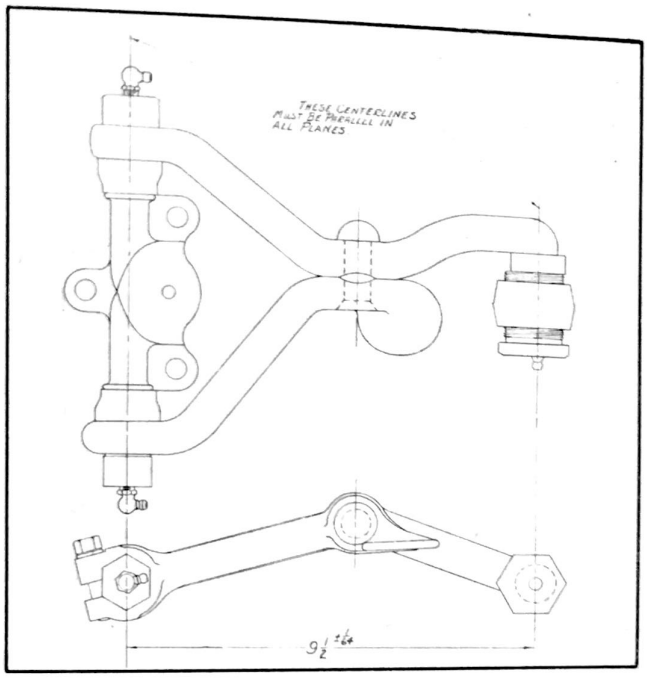

Figure 326 - Upper Support Arm Alignment

Low or uneven tire pressure. Inflate tires according to pressures given in Chassis Section.

Steering gear or steering connections adjusted too tight. Jack up front wheels off the floor and test the steering system for binding. Adjust if necessary and lubricate.

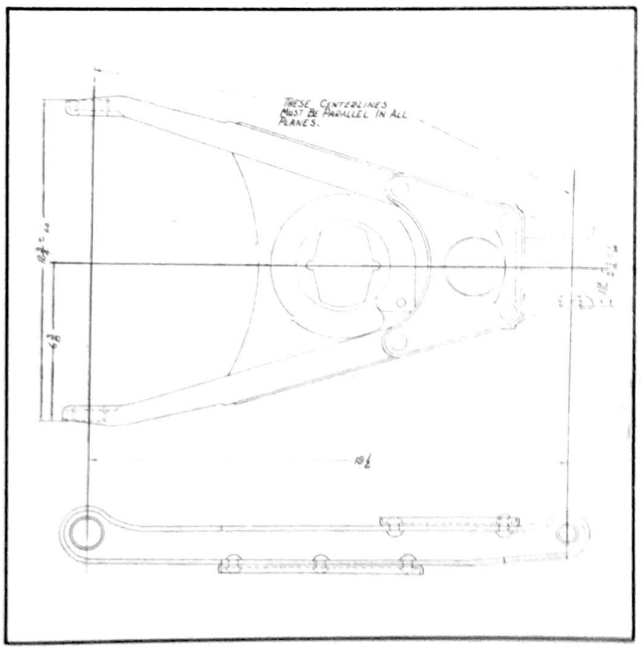

Figure 327 - Lower Support Arm Alignment

Insufficient or incorrect lubricant used. Check lubricant in the steering gear and lubricate steering system. See Lubrication Section,

Too much caster.

Support arms bent or twisted. Check wheel alignment by testing camber, steering spindle bolt inclination and caster. If arms are out of car, check against specifications shown on Fig. 326, 327, 328. Replace arms with new - do not attempt straightening.

Front springs sagged. Check over-all length of springs. The distance from the bottom of the upper rebound bumper bracket to the lower support arm bumper bracket should not vary more than 1/2" each side. See Fig. 312, page 247.

Frame bent or broken. Check frame for proper alignment. See Chassis Section.

Steering spindle, steering spindle support, steering arm are bent. Check against specifications on Fig. 327, 328, 329. Replace if bent. Do not attempt straightening.

LOOSENESS OR EXCESSIVE PLAY IN STEERING SYSTEM. Steering gear or steering connections either adjusted too loose or worn. Steering spindle bearings worn. Front wheel bearings incorrectly adjusted or worn.

STEERING ERRATIC WITH BRAKES APPLIED. Low or unequal tire pressures. Brakes incorrectly or unevenly adjusted. Oil soaked brake lining. Coil springs weak. Replace or shim. See page 247. Insufficient or uneven caster. Steering spindle or spindle support bent. Check according to Fig. 328, 329 and replace if necessary.

CAR PULLS TO ONE SIDE. Low or uneven tire pressure. Rear wheels not tracking with front wheels. Check alignment of rear wheels with front wheels and correct if necessary. Oil soaked brake linings. Shock absorbers not functioning at all or partly operating. Check shock absorbers for lack of fluid, adjustment, and dirt in the operating parts. See page 265. Wheel bearings adjusted too tight. Check for binding with front wheels off the floor. Adjust bearings and lubricate. Toe-in correct. Incorrect or unequal caster or camber.

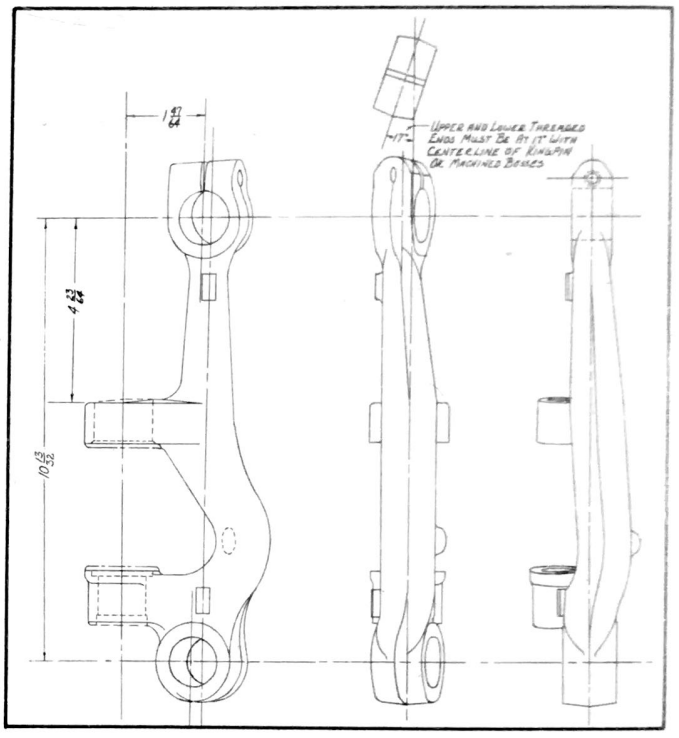

Figure 328
Steering Spindle Support Alignment

Coil springs sagged. Check as shown in Fig. 312. Rear axle shifted. Check spring clips for looseness. Check distance from rear spring pivot bolt to axle housing. This distance should be the same on both sides. Check the rear spring center bolt to determine if it is sheared. Frame bent or broken. Check frame for proper alignment. See Chassis Section. Also possible breakage. Steering spindle, spindle support, or steering arm bent. Check according to Fig. 327, 329, 330. Auto-Poise not centralized. See page 260.

SCUFFED TIRES. Tires incorrectly inflated. Toe-in correct. Adjust tie rods to give front wheels correct toe-in. Wheels or tires out of true. Check for wheel and tire wobble. Check wheel and tire

mounting. Steering spindle bearings worn. Suspension arms bent or twisted. Check wheel alignment by testing camber. Spindle pin inclination and caster. If steering spindles are out of the car, check them against specifications in Fig. 326, 327, 328. Unequal caster. Toe-in incorrect on turns. Check for bent tie rods; steering arm. Steering spindle or tie rods bent. Install new steering spindles or tie rods. Turning corners at high speeds.

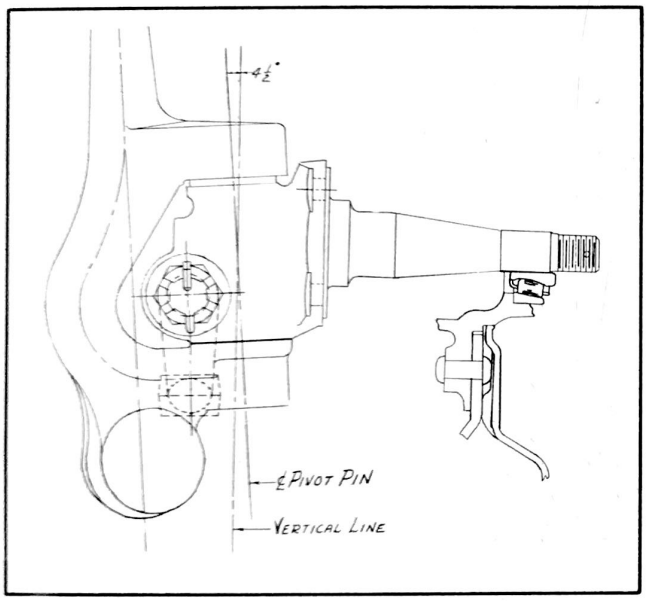

Figure 329 - Pivot Pin Inclination

CUPPED TIRES. Tires incorrectly inflated. Normal cupping of tires can be expected - tires should be frequently interchanged. Dragging brakes. Wheels, tires or brake drums out of balance. Balance tires and wheels. Check for bulged or eccentric tire conditions. Steering spindle bearings or wheel bearings worn or out of adjustment. Unequal caster. Steering spindle or spindle support or tie rods bent.

FRONT WHEEL SHIMMY. Low or unequal tire pressure. Steering connections worn or incorrectly adjusted. Steering gear incorrectly adjusted. Front wheel bearings worn or incorrectly adjusted. Wheels, tires or brake drums out of balance. Wheels or tires out of true. Incorrect or unequal caster. Shock absorbers low or out of fluid or dirt in them. Steering spindle or tie rods bent. Lack of lubrication or wrong lubricant. See Lubrication Section. Eccentric or bulged tires. Auto-Poise incorrectly installed. See page 260.

WHEEL TRAMP. Wheels, tires and brake drums may be out of balance. Coil springs weak. Shock absorbers low or out of fluid or dirt in them. Lack of proper lubrication. Auto-Poise incorrectly installed. See page 260.

CAR WANDER. Low or unequal tire pressure. Steering gear or connections too loose or worn. Steering gear or connections adjusted too tight. Check for binding with front wheels off the floor - Lubricate. Steering spindle bearings worn. Wheels toe-in too much or toe-out in straight ahead position (bent tie rods). Caster incorrect or unequal. Steering spindle bent. Steering spindle pivot pin bent. Rear axle shifted. Check spring clips for looseness. Check distance from rear spring pivot bolt to axle housing. The distance should be the same on both sides. Auto-Poise incorrectly installed. See Page 260. Tread better on rear tires than on the front. Put tires with the best tread on the front.

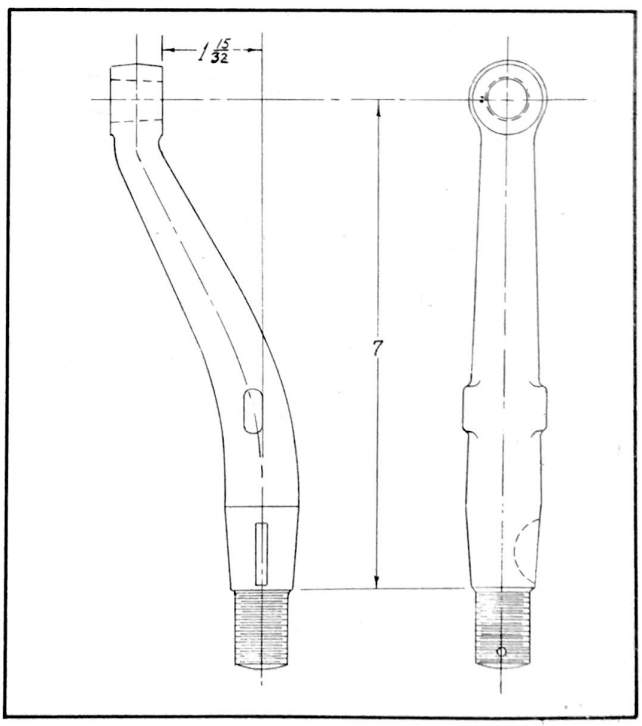

Figure 330 - Steering Arm Alignment

ROAD SHOCK. Low tire pressure. Steering gear or connections incorrectly adjusted. Too much caster. Shock absorbers low or out of fluid. Dirt in them. Coil springs weak or sagged. Incorrect size or type of tires. Steering spindle bent.

AUTO-POISE

Auto-Poise control consists of a specially designed bar attached to the frame across the front of the chassis with the ends directed backward to form lever arms.

The lever arms of the Auto-Poise bar (34), Fig. 317, are connected to the brake backing plate (7) by means of connectors (38).

The Auto-Poise bar being connected to the brake backing plate is immediately affected by anything that turns the front wheels out of a straight ahead position because the brake backing plate turns with the wheels.

Side winds, road shock, rough roads and even the action of the driver in turning the wheels with the steering wheel sets up a twisting of the bar and immediately it tends to untwist and bring the wheels back into a straight ahead position again.

The Auto-Poise is in addition to the caster of the front wheels and does not take the place of caster but is independent of it.

Caster and camber of the front wheels is the adjustment of the front wheels which permits easier steering because of gravity, but gravity is not always present in the same amount, as for instance when the wheels leave or nearly leave the ground on very rough roads and if this is accompanied by sudden gusts of side wind then caster does not function.

Caster and camber adjustments are necessary and are provided for (See page 245).

Auto-Poise rides in rubber bushings (35), Fig. 317, held to frame by brackets (36), and the connectors (38) holding the Auto-Poise to the brake backing plate (7) are cushioned in rubber with retainers.

No lubrication is necessary.

AUTO-POISE BAR MUST BE CENTRALIZED and when the Auto-Poise has been removed and it is necessary to make a new installation, precaution should be taken to obtain proper centralization of the Auto-Poise bar in the rubber bushings.

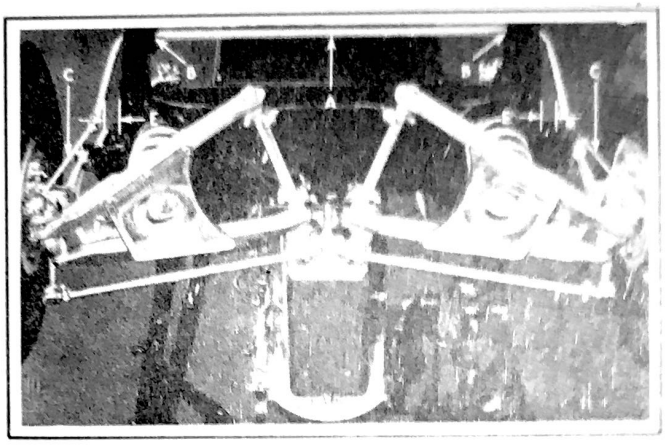

Figure 331 - Auto Poise Centralizing

Due to the twisting characteristics improper position of the bar in the rubber bushings may cause the front wheels to pull to one side.

To check this condition:

1. Jack up front of car so that wheels are clear of floor.

2. Disconnect drag link at steering gear pitman arm.

3. Note carefully the position of both front wheels as related to their straight ahead position. A tendency of the car to steer to the right would indicate unequal projection of the torsion bar to the right.

Steering to the left would indicate unequal projection to the left.

NOTE: When checking, be sure the steering spindle pivot pins are properly lubricated.

AUTO-POISE ADJUSTMENT. Loosen the two bushing bracket bolt nuts (37), Fig. 317, onnboth sides just enough to relieve the pressure of the bushings on the bar. Turn the wheels to the extreme right and then to the extreme left to equalize the position of the bar in the bushings.

When the distance between the center of the connector and the outside surface of the frame side member is equal on both sides, the front wheels will automatically return to the straight ahead position when turned to either right or left and released.

After proper position has been determined, tighten bushing bracket bolts, (37) and again turn the wheels to extreme right and left positions as a final check. Attach drag link to pitman arm.

NOTE: It is necessary to adjust the Auto-Poise bar whenever it has been removed or the connecting bracket has been removed.

AUTO-POISE REMOVAL. Disconnect Auto-Poise bar (34), Fig. 317 at the top of connectors (38) (both sides). Open the bonnet. Remove Auto-Poise bushing brackets (35) (on frame). Cut one rubber bushing (35) off from Auto-Poise bar, slicing through the bushing so that it can be used again. Work shaft out of the hole in the fender on the opposite side from which the rubber bushing was cut. Remove the shaft from the other fender, working from bonnet opening.

AUTO-POISE INSTALLING. If a new Auto-Poise bar is to be installed it will be necessary to slice one bushing and remove it from the bar before installing to facilitate installation.

The rubber bushings cannot be pulled through the holes in the fenders; therefore, the cutting of one rubber bushing makes it possible to work under the bonnet and work the Auto-Poise bar out and in from that point.

Install the Auto-Poise bar through the bonnet opening, installing the end without the bushing through the fender hole first. Work the end with the bushing on through the opposite fender hole. Install the rubber bushing and both bushing brackets. Connect Auto-Poise bar to connectors. Be sure to centralize bar in bushings before final tightening. See "Adjusting Auto-Poise".

REAR SUSPENSION

REAR SPRINGS on all except 10 models are 60" in length, 1-3/4" wide with 9 and 7 leaves and are splay mounted with the widest portion at the rear. The model 10 spring is 52-1/2" long.

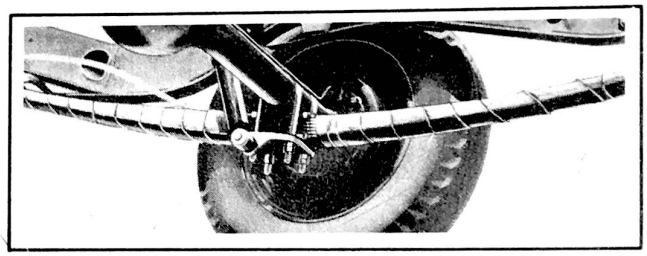

Figure 332 - Rear Spring Suspension

The leaf spring clips are doweled for the 1 and 4 locations with spacers between them and this together with the rear lateral stabilizer (all models except Commercial and model 10 Trav.) prevents fanning or spreading of the leaves during car operation.

The front end of the rear spring is mounted in rubber and is entirely insulated from the rest of the chassis. This eliminates noise at this point and allows increased riding comfort through reduction of torque and brake reaction shock.

A shoulder pin with a round head is used, the top of which sets flush in the pressed steel bracket and the other end is threaded. The pin is pressed through two rubber bushings fitted in the spring eye. A lockwasher and nut are used to lock the pin and bushings in place.

No lubrication is required at this point.

The rear end of the rear spring is attached to the frame through threaded self-adjusting shackles. The shackles are provided with shoulders to hold rubber dirt seals in place, to prevent dirt and road splash entering the threaded bushings. These dirt seals are in the form of short rubber sleeves and are assembled on the shackle before it is inserted in the bushings or mounted on the frame.

Rubber cushions and retainers are used between the spring and axle housing to reduce road noises to a minimum.

Inter-leaf friction affects performance of springs to a great extent and to keep this friction as nearly constant as possible in all weather and climates, the springs are thoroughly lubricated during car production and spring covers are installed.

The spring covers prevent road dirt from getting between the spring leaves and avoid the necessity of adding lubrication for several thousand miles.

REAR SPRING REMOVAL. Jack up the rear axle on a roller jack and place stand jacks under the chassis frame side rails. Disconnect lower end of shock absorbers. Remove the rear spring to axle clip nuts, clip plate and clips. Remove rear spring front mounting pin nut and lockwasher. Remove rear spring front mounting pin using J 1438 Rear Spring Pivot Bolt Remover and Replacer tool (Fig. 336). Unscrew the threaded bushing in the spring frame bracket at the shackle end of the rear spring.

On cars having the spare tire well in the rear compartment (trunk) it is first necessary to punch out the knock-out plug in the well in order to remove the upper threaded bushing.

Remove the spring from under the car.

REAR SPRING DISASSEMBLY. Clamp the spring in a vise so that the spring leaf center bolt is outside of the jaws of the vise. Unscrew the shackle threaded bushing. Remove the two leaf clip bolt nuts and spacers at the outer ends and cut the two inner clips off. Remove the center bolt and nut. Open the vise and disassemble the spring.

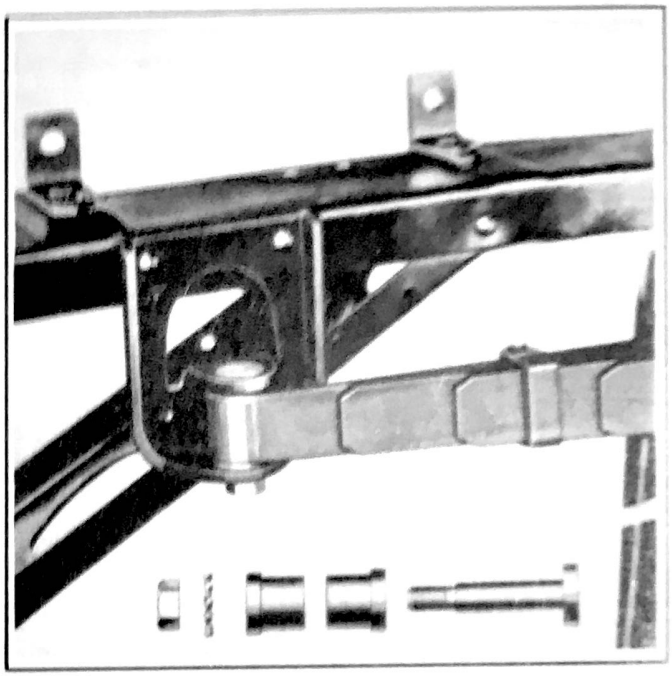

Figure 333 - Rear Spring Front Mounting

REAR SPRING ASSEMBLING AND INSTALLING. The leaves should be lubricated with viscous chassis lubricant and assembled in their proper order with a piece of 1/4" rod passing through the center bolt hole of each leaf. Clamp the loose assembly in a vise and draw the leaves together, keeping them in alignment as the vise is tightened. The bracket for holding the brake cable clip is assembled under the second from front leaf clip. Use two new box type leaf clips, bolts, nuts and spacers. Insert the center bolt and tighten the nut. Use the original leaf clips that are riveted to the bottom spring leaf at outer ends, install the spacers, the bolts, and nuts. Insert one end of the rear spring shackle through the main leaf eye after placing rubber dust seals in place on shackle and place tool J 524 between the spring eye and shackle as shown in Fig. 335. Start the threaded bushing in the shackle thread and draw it tightly into the spring eye. Place the spring in position with the shackle passing through the threaded tube welded into the frame

side rail. Locate the shackle with the spacer tool J 524 as shown in Fig. 325 and start the threaded bushing on the shackle and draw it tightly into the mounting.

It is important that the shackle be located properly so as to insure the bushing being threaded far enough on the shackle but not far enough to bottom the thread in the bushing as the shackle moves in its normal operation. Bottoming will cause a hard ride and shackle breakage.

NOTE: In using shackle bushing locating gauge it is necessary to slide rubber dust seals out of the way.

Replace the rear spring front mounting pin, using tool J 1438 (Fig. 336). The rear spring should be mounted in the front shackle so that there is no unnatural twist set up in the rubber bushings. The rubber bushings and the mounting pin should be assembled in place as shown in Fig. 333, but the nut not tightened until the spring has been compressed to a normal position which will give it a correct camber. Then tighten the mounting pin nut. Replace clip plate and clips. Tighten securely. Connect lower end of shock absorber to the clip plate. Remove stand jacks and lower car to floor.

REAR SPRING LEAF KIT having an extra No. 2 leaf with leaf clips to take care of the extra thickness can be obtained from the Hudson Parts Department for use when spring reinforcement is necessary.

The extra leaf will be the No. 2 leaf next to the eye leaf and four box type leaf clips with bolts, nuts and spacer (used on bolt) also center bolt will be supplied.

REAR SPRING SHACKLE IDENTIFICATION. The right hand rear spring shackle has right hand threads on both upper and lower ends and the left hand rear spring shackle has right hand threads on the upper and left hand threads on the lower end.

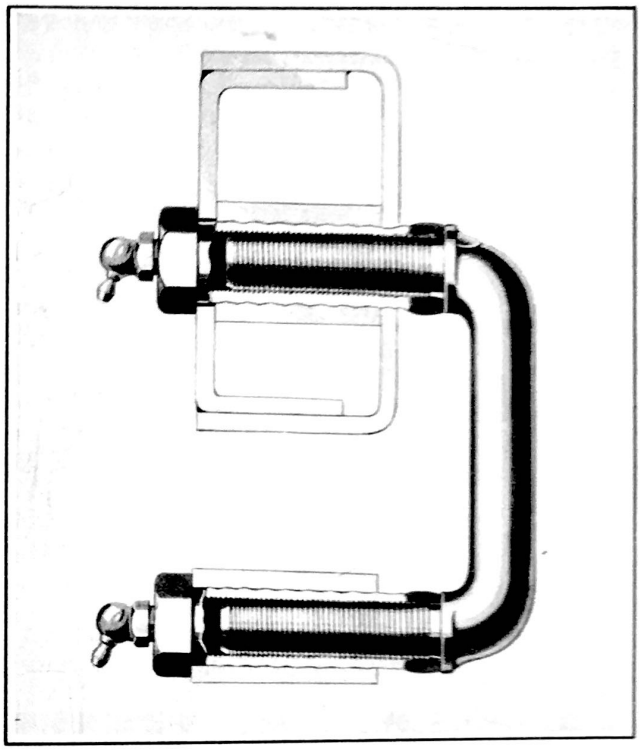

Figure 334 - Rear Spring Shackle Mounting

The lower left hand shackle bushing is left hand thread and has an identification groove 1/16" wide on the head.

The shackle having the left hand thread has a single forging mark at the shoulder.

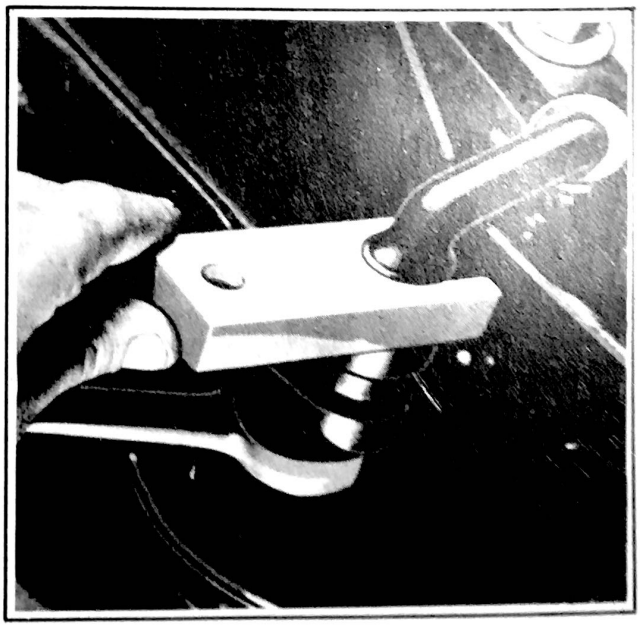

Figure 335 - Rear Spring Shackle Bushing Locating Gauge J-524

If the zerk fitting is removed and replaced for any reason it must not be turned into the tapped hole so tightly as to cause the zerk fitting to bottom on the end of the shackle and thus loosen the plug that is in the end of the shackle bushing.

REAR AXLE STABILIZING BAR is used on all models except 10 Traveler and Commercial Cars. This lateral stabilizing bar controls horizontal movement of the car body and frame. It is mounted to the frame at one end and to the axle at the other end.

These points (frame and axle) are cushioned in rubber.

Vertical movement of the frame and body is controlled by the shock absorber.

Side to side or lateral movement is controlled by the lateral stabilizer bar.

The stabilizing bar eliminates axle "hopping" and the setting up of vibrations in the axle that continue indefinitely after the original cause has gone.

There is no torque or twist action in this bar and possible replacement of the rubber cushions is practically all that is required in servicing this unit.

REAR AXLE STABILIZING BAR REMOVAL is started at the rear axle end of the stabilizing bar by removing the outside nut (C), Fig. 337, the cushion (rubber) (A) and the cushion washer (B). Loosen the inside nut (D) and run it up on the threads. Push the cushion and washer up on the bar and remove the cushion spacer. At the frame end remove the pal nut and the hexagon nut (E). Remove the cushion, the washer and the spacer. Push the stabilizing bar toward the axle stabilizer bracket and remove the frame end of the bar from the frame. Do not lose or destroy the rubber grommet in the frame for the stabilizer bar guide rod (F) (welded to the bar). Pull the bar toward the frame stabilizer bracket and out of the axle stabilizer bracket.

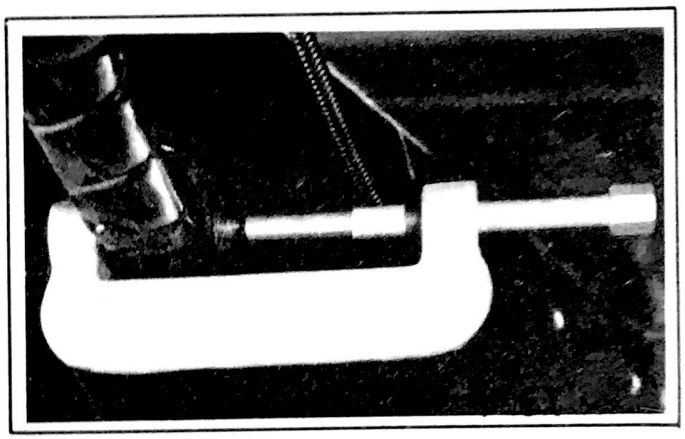

Figure 336 - Rear Spring Front Mounting Pin Remover and Replacer Tool J-1438

REAR AXLE STABILIZING BAR INSTALLATION is started at the frame end of the stabilizing bar. Have the inside nut at axle and well up on the bar and the cushions and washers in place at both ends. Push the bar through the axle bracket and then put the frame end in place with the locating guide rod in the rubber grommet in the frame. Place the outside cushion spacer and washer on the frame end of the bar and install the hexagon nut. Tighten the nut and install the pal nut. Spin the companion or pal nut with the smooth face first onto the bolt until it touches the nut. Then tighten the companion nut with a wrench not over one quarter to one third more in order to lock it.

The shoulder on the bar rests against the cushion spacer and frame and allows the bar to pass through the frame far enough to install the nuts and tighten them in place. This locates the bar in position.

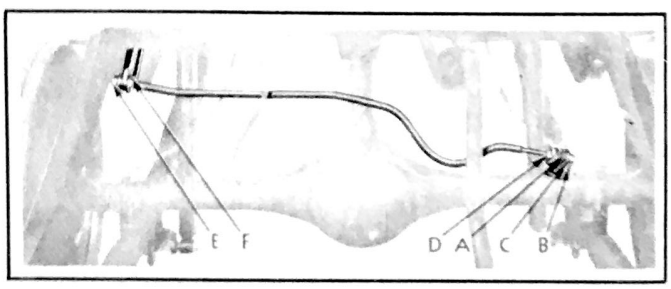

Figure 337 - Stabilizer Bar

A. Cushion (rubber)
B. Cushion washer
C. Outside nut
D. Inside nut
E. Hex nut
F. Guide rod

Place the outside cushion, cushion washer and spacer on the axle end of the bar and install the outer nut. Tighten it securely. The nut tightens the spacer against a shoulder on the bar. Run the inside locking nut and rubber cushion down on the threads and up against the axle bracket. Tighten it securely.

SHOCK ABSORBERS

The following calibrations are standard:

MONROE

Front - Light Control	10,11,12, (3 & 4 Coupe) 14,15 (3 & 4 Coupe)	..... 3-8 (4) 10-10-B2
Rear -- Light Control	10,11,12, (3 & 4 Coupe) 14,15 (3 & 4 Coupe)	..... 5-8 (4) 10-10-J6
Front - Light Control	18	..... 2-6-8 (4) 10-10-E2
Rear -- Light Control	18	..... 4-8 (4) 10-10-A2

DELCO

Front - Light Control	12,14,15,17 (except 3& 4 Coupe)	3-8-6 (4) 10-10-E2
Rear - Light Control	12 (except 3 & 4 Coupe)	..... 5-8 (4) 10-10-A2
Front - Light Control	14,15,17 (except 3 & 4 Coupe)	. 2-10 (4) 10-10-E2
Rear - Heavy Control	14,15 (except 3 & 4)Coupe) 17	. 3-10 (4) 10-10-A2

The 8 and 6 on the front recoil means one .008" and one .006" valve put on top of one another. The same condition is true on the 10 and 10 on both front and rear.

The valve code is stamped on the dust shield and is translated as follows:

The last figure represented by a letter and a numeral such as (E 2) is the compression relief valve code.

Other figures in this code represent the piston rebound valve code.

1st digit is orifice disc.

2nd digit and/or 3rd digit is the spring disc.

Digit in parenthesis is the spacer disc.

Last or last two digits preceding the compression valve code are spring discs.

Front valving 3-8-6-(4)-10-10-E2. This represents a No. 3 orifice disc; a No. 88 and a No. 6 spring disc; a No. 4 spacer disc and two No. 10 spring discs. Compression valve is code E2.

Capacity	Front	Rear
Ounces	3-3/4	6-1/4

SHOCK ABSORBER COMPRESSION STROKE. When the car spring is being compressed, the piston (X), Fig. 338, moves toward the lower end of the cylinder. Fluid is forced through the holes (M) in the piston, lifting intake valve plate (C) and entering the upper chamber (B). The volume of fluid thus displaced by the piston is forced out of the lower chamber (F) through compression valve (U) and into the surrounding reservoir (A). As this opening is below the level of the fluid in the reservoir, no emulsion of air and fluid can be formed. The resistance to the vehicle spring travel is determined by the orifice in the valve disc and in the spring tension of the spring discs (J).

REBOUND STROKE. When the car spring rebounds, the resistance is instantly effective. As the piston (X), Fig. 338, is pulled up, the fluid in the upper chamber (B) is forced through the slot in valve

plate (C) through holes in piston at (W) against metering washer (V). This Valve Assembly is known as a 2-Stage Valve, see Fig. 339. Metering washer (V) and spring disc (D) can be considered the 1st stage. Spring disc (E) and valve back plate (G) can be considered the 2nd stage.

Spacing disc (H) from its name acts as a means of separating the 2nd stage of the valve from the 1st stage.

The 1st stage of this valve is mainly effective on low velocity fluid movements and controls the car on the "Boulevard Ride." On high velocity fluid movements the 1st stage orifice disc and bending disc move and engage the 2nd stage discs. thereby providing additional shock absorber control.

The action of this valve allows the fluid to pass into the lower chamber (D). Fig. 338. Since the piston is moving out of the inner chamber, the added displacement is compensated by a return flow of fluid drawn into the lower chamber from the surrounding reservoir (A) through compression valve (U). The valve plate (T) is lifted off its seat in this operation allowing the fluid to fill the inner chamber (D).

FRONT SHOCK ABSORBER REMOVING. Remove shock absorber nut and pal nut and rubber bushing at the top of the shock absorber. Remove the two cap screws, holding the shock absorber support plate to the lower support arm. Turn shock absorber 1/4 turn and remove. To reinstall, reverse procedure of removal.

In reinstalling, place the shock absorber stud nut on so that 1/4" of stud projects for the installation of the pal nut.

REAR SHOCK ABSORBER REMOVING. Remove lower stud nut and washer, Fig. 340. Remove upper mounting bolt and nut and remove shock absorber. To reinstall, reverse procedure of removal.

SHOCK ABSORBER DISASSEMBLY (DELCO OR MONROE). Remove the shock absorber from the car. Clean the outside of the shock absorber thoroughly. Extend the shock absorber fully and place the lower end of the shock absorber in a vise using holding fixture J 993-1 and with the double spanner wrench J 993-2 inserted through the slots in the dirt shield tube, engage the notches of the piston rod guide and unscrew the guide.

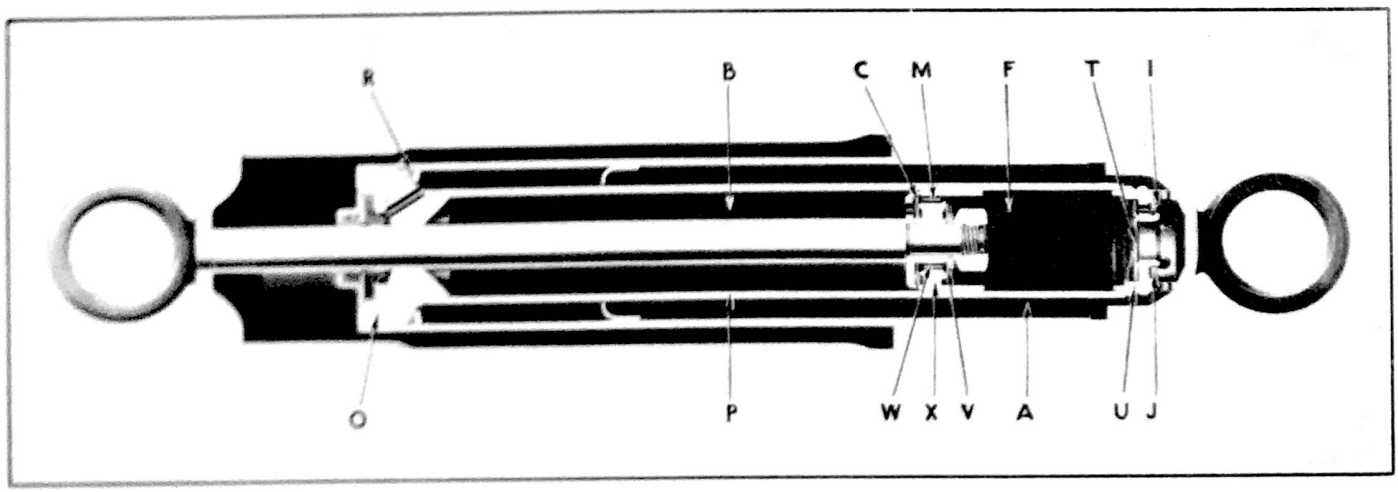

Figure 338 - Delco Shock Absorber Sectional View

A. Reservoir
B. Upper chamber
C. Intake valve plate
D. Lower chamber
J. Spring discs
M. Piston ports
T. Valve plate
U. Compression valve
V. Metering washer
W. Piston ports
X. Piston
Z. Valve ports

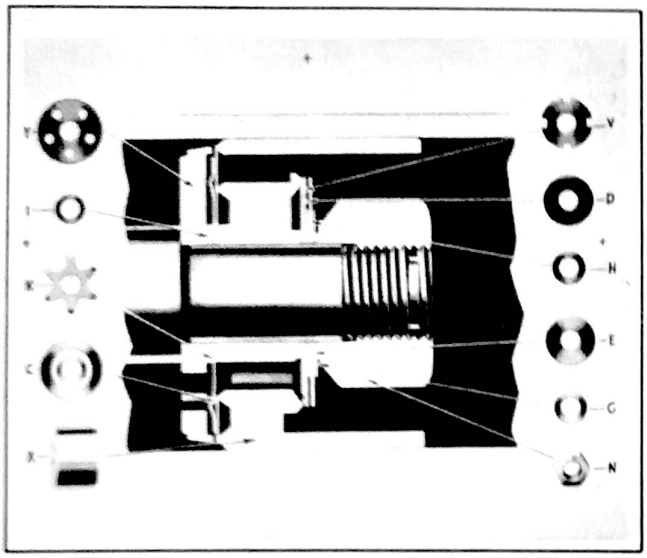

Figure 339 - Delco Shock Absorber Relief Valve Detail

C. Intake valve plate
D. Valve disc
E. Valve disc
G. Valve back plate
H. Spacing disc
I. Spacing washer
K. Star spring
N. Piston nut
X. Piston
V. Metering washer
Y. Valve washer

DO NOT CLAMP THE TUBE OR STUD IN A VISE.

Pull out the upper part of the shock absorber.

Remove the lower part from the vise and empty out the old fluid.

Remove the rubber gasket at the top of the reservoir tube (A), Fig. 338. Discard this gasket and always use a new one when rebuilding.

Open the compression valve (U), Fig. 338, by pressing it inward and drain all fluid from the inner chamber.

Remove compression valve (U) from bottom of pressure tube. This valve is a light press fit in the tube and can be easily taken out by placing a punch or screw driver against the "V" groove machined on the outside of the valve body and tapping lightly with a hammer.

Do not injure pressure tube or valve by placing them in a vise when doing this. The relief valve is assembled as a unit and cannot be taken apart for servicing. If repairs are necessary, replace complete assembly with a new one.

Place the upper part of the shock absorber in holding fixture J 993-1 and clamp in vise with the open end of the shock absorber up and then push the pressure tube down as far as it will go. Remove the parts on the Front Shock Absorber in the order given - on Fig. 341.

VALVE DISASSEMBLY, FRONT MONROE SHOCK ABSORBER. Remove piston rod nut (10), Fig. 341, pressure relief valve disc (9) (2 used), pressure relief valve back plate (8), pressure relief valve disc (7), pressure relief valve disc (6), metering washer (5), piston (4). Be sure to mark location of piston on rod to insure it being replaced in same position, intake valve (3), intake valve star spring (2) and support washer (1).

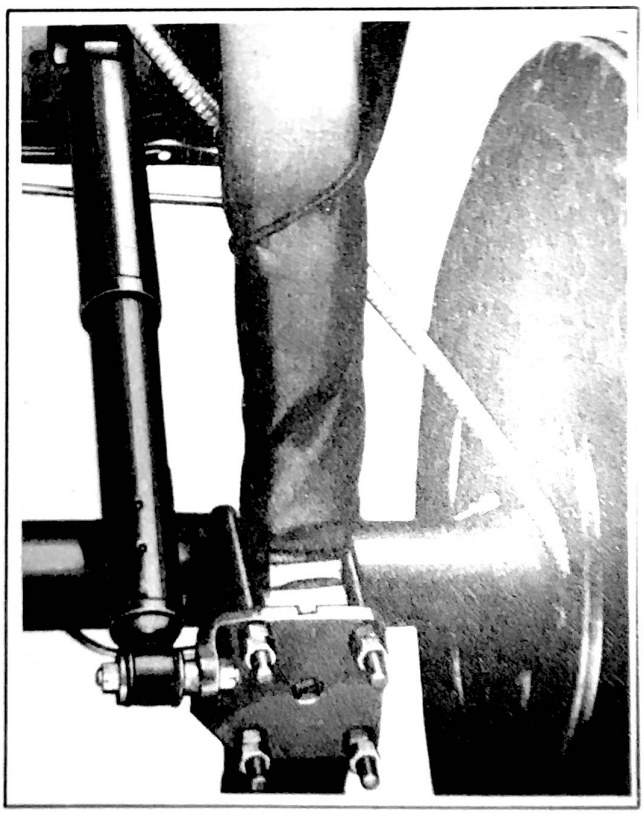

Figure 340
Rear Shock Absorber Mounting

VALVE DISASSEMBLY, REAR MONROE SHOCK ABSORBER. Remove piston rod nut (21), Fig. 341, pressure relief disc (20) (2 used), pressure relief valve back plate (19), pressure relief valve disc (18), metering washer (17), piston (16). Be sure to mark location of piston on rod to insure it being replaced in same position, intake valve (15) intake valve star spring (14) and support washer (13).

VALVE DISASSEMBLY, DELCO SHOCK ABSORBER, FRONT AND REAR. Remove piston nut (N), Fig. 339, back plate (G), relief valve disc (E), spacing disc (H), relief valve disc (D), metering washer (V), piston (X), intake valve plate (C), star spring (K), spacer washer (I) and valve washer (Y).

The component parts of the piston rod guide and oil seal assembly not replaceable separately; therefore, if parts are worn or not in good condition, the complete assembly should be replaced.

This assembly is a light press fit in the pressure tube and is best removed by inserting a fibre or wood rod and tapping the guide against it.

SHOCK ABSORBER CHECK-UP. Check all shock absorber brackets to be sure that they are tight.

Check rubber mounting bushings and replace if worn.

Check piston operation by pulling the shock absorber back and forth to insure the piston is not binding in the cylinder tube and that it is perfectly free.

Check valve assembly to see that the parts are thoroughly clean and in correct relation to each other as shown in Fig. 339

See that piston nut is tight.

See that the rod guide is screwed down tightly and that the seal assembly or gasket is not leaking.

CHANGING VALVES (DELCO AND MONROE). It is possible to change the amount of control by removing certain valve parts and replacing them with others.

The change affects the riding characteristics or riding qualities of the car and before changing shock absorber valves the tire pressures should be checked and the quality, also quantity of shock absorber fluid should be checked.

All four shock absorbers should be changed at the same time. Satisfactory results will not be obtained by changing the front or the rear shock absorbers only.

SHOCK ABSORBER ASSEMBLING. Place end of shock absorber in vise fixture so piston rod and tube point upward. Screw thimble supplied in shock absorber repair kit onto threaded end of piston rod, Fig. 342. This should always be done in order to prevent damaging the piston rod oil seal when reassembling. Install the pressure tube and piston rod guide, sliding oil seal over piston rod.

Install piston and valve parts on piston rod in the reverse order from which they were removed, and exactly as shown in Fig. 339 and 341. Be sure the marks previously made on the piston and rod line up in order to insure free operation, and that valves and washers face in the proper direction.

Replace and tighten piston rod nut and move pressure tube up and down on piston a few times to check for freedom of movement. In the event that the piston and rod have not been assembled in their original positions and binding results, loosen the piston nut and move pressure tube up and down a few strokes, at the same time turning the piston to a new position and tightening the nut. Repeat this procedure until smooth, free operation without evidence of binding is secured. Securely tighten piston rod nut and stake to prevent loosening.

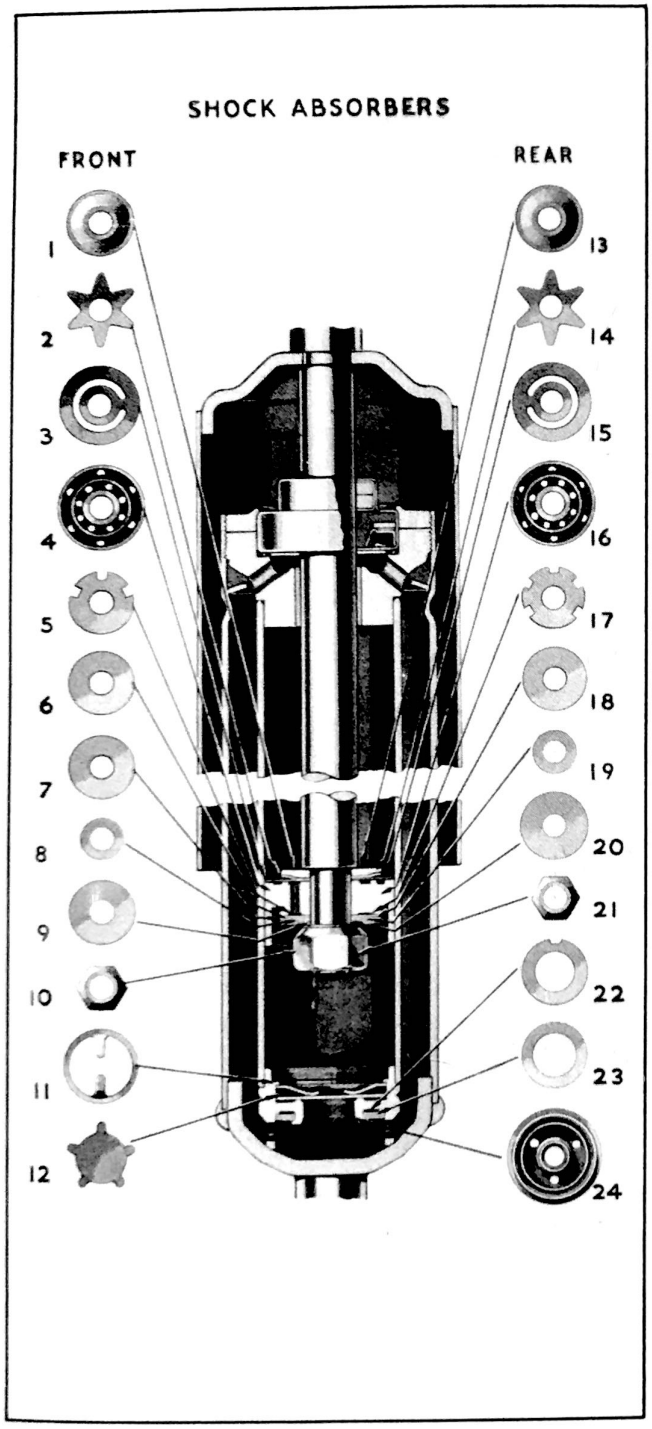

Figure 341 - Shock Absorber - Monroe

PARTS OF FRONT
1. Support washer
2. Intake valve star spring
3. Intake valve
4. Piston
5. Metering washer
6. Pressure relief valve disc
7. Pressure relief valve disc
8. Pressure relief valve back plate
9. Pressure relief valve disc (2 used).
10. Piston rod nut
*11: Intake compression valve spring
*12. Intake compression valve
*22. Intake compression valve metering washer
*23. Intake compression valve spring disc 3 required
*24. Cylinder end

PARTS OF REAR
13. Support washer
14. Intake valve star spring
15. Intake valve
16. Piston
17. Metering washer
18. Pressure relief valve disc
19. Pressure relief valve back plate
20. Pressure relief valve disc (2 used)
21. Piston rod nut
*11. Intake compression valve spring
*12. Intake compression valve
*22. Intake compression valve metering washer
*23. Intake compression valve spring disc 3 required
*24. Cylinder end

*Part of Intake Compression Valve - not sold separately - order a complete valve.

With shock absorber filler cup J 993-3-A properly adjusted, measure out the exact quantity of genuine HUDSON SHOCK ABSORBER FLUID to fill unit being serviced (3-3/4 ounces for front, 6-1/4 ounces for rear).

Pull pressure tube upward on piston to full extent or until piston contacts guide; then pour into the tube enough of the measured fluid contained in the measuring cup to fill it.

Install relief valve assembly in end of pressure tube, carefully tapping it in place, so that shoulder contacts edge of tube all around.

Place eye of lower assembly in vise fixture and install beveled piston rod guide gasket retainer in counterbore at top of reservoir tube so that convex side will face open end. Make sure that retainer is not bent or damaged in any way.

Install new piston rod guide rubber gasket, on top of retainer after soaking it in shock absorber fluid and stretching to fit properly.



Figure 342 - Piston Rod Thimble

Pour into reservoir tube remainder of the previously measured quantity of shock absorber fluid.

Turn upper assembly right side up and insert pressure tube into reservoir tube of lower assembly as far down as it will go, then turn it clockwise to engage the threads on the piston rod guide with those in the reservoir tube.

Pull upward on upper half of shock absorber until the slots in the dirt shield tube are above piston rod guide, then insert double spanner wrench and engage notches in top of guide. Complete tightening operation with wrench, making sure that piston rod guide is drawn down tightly on gasket to preclude possibility of leakage.

Remove air from pressure tube by moving the upper half of the shock absorber up and down a few times. This can best be done by holding the lower eye in a vise as it is imperative that the unit be held in a vertical position as on the car. A certain amount of air is necessary in the reservoir chamber for proper operation. As this is largely determined by the level of the fluid, it will be seen that it is absolutely essential to use exactly the recommended quantity when servicing.

SHOCK ABSORBER REFILLING. It is unnecessary to refill shock absorbers unless the unit is disassembled for repair or changing valve control.

REFERENCES

SOURCE OF INFORMATION	DATE	SUBJECT

STEERING GEAR

SPECIFICATIONS

Type	Worm and roller tooth
Ratio, Models 10, 11, 12, 14, 15, 18	18.2 to 1
Models 17	18.4 to 1
Adjustments -	
Worm shaft	Shims
Cross shaft bearing, Models 10, 11, 12, 14, 15, 18	Bronze pressed in bushing
Cross shaft bearing, Models 14, 15, 17	Needle Roller
Cross shaft nut - Tighten with torsion wrench	70 foot pounds
Turning pull, Models 10, 11, 12, 18	26 lbs. maximum
Turning pull, Models 14, 15, 17	27 lbs. maximum
Wheel pull to turn from mid-position	2 lbs. applied at rim
High Point	Main column tube notch points down
Wheel diameter, Models 10, 11, 14, 17, 18 (7 Sedan)	17"
Wheel diameter, Models 12, 17 (5 Sedan), 15	18"
Wheel diameter, optional on Models 10, 11, 14, 18, except 7 Sedan	18"
Lubrication - all seasons	S.A.E. 90 E.P.
Drag link - Models 11, 12, 14, 15, 17	26-11/16" long
Drag link - Models 10, 18	21-15/16" long
Steering wheel nut - tighten to	25 foot pounds
Pitman arm nut - tighten to	140 foot pounds
Steering arm nut - tighten to	105 foot pounds

STEERING GEAR ATTACHMENT. The steering gear bolts to the frame side member front reinforcement on the inside of the frame with the gear shaft on which the ball arm assembles pointing to the inside. Three serrated neck bolts (A), Fig. 345, attach the gear to frame.

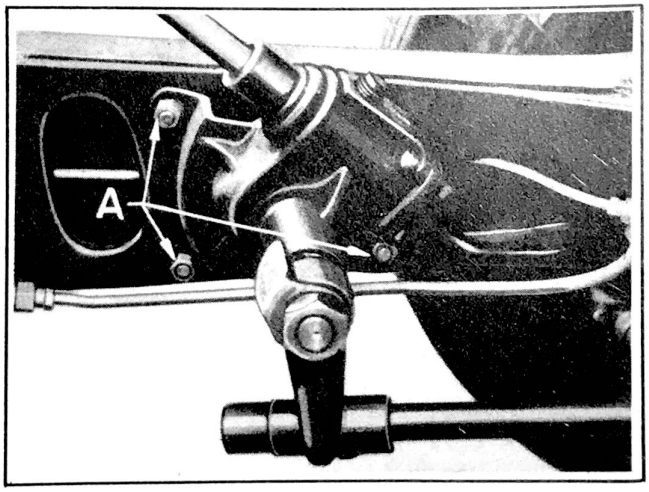

Figure 345 - Steering Gear Mounting

STEERING WHEEL.

17" Wheel Standard on Models 10, 11, 14, 17, 18 7 Sedan.

18" Wheel Standard on Models 12, 15, 17 (5 Sedan)

18" Wheel Optional on Models 10, 11, 14, 18, except 7 Sedan

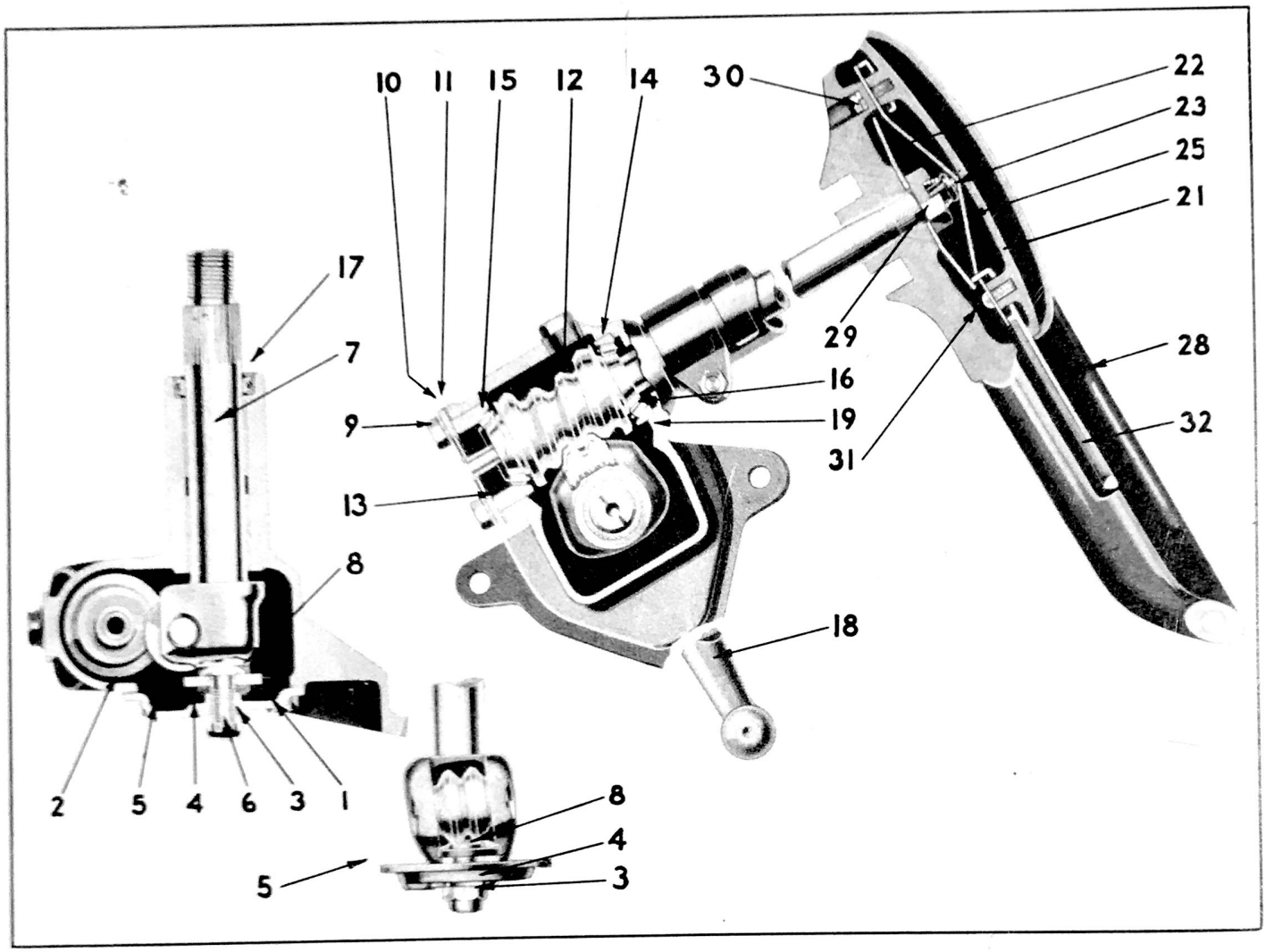

Figure 346 - Steering Gear Details

1. Housing cover screws
2. Housing cover gasket
3. Cross shaft adjusting screw lock nut
4. Cross shaft adjusting screw lock plate
5. Steering gear housing cover
6. Cross shaft adjusting screw
7. Cross shaft and roller tooth assy.
8. Cross shaft thrust washer
9. Steering gear worm housing cover bolt
10. Worm housing cover
11. Worm housing cover shim
12. Main column tube and worm assembly
13. Worm bearing lower ring - adj.
14. Worm bearing assembly - upper
15. Worm bearing assembly - lower
16. Worm bearing upper ring - adj.
17. Cross shaft oil seal
18. Cross shaft pitman arm
19. Housing
20. Cross shaft bushings

HORN BUTTON PARTS

21. Horn button
22. Contact spring
23. Horn wire
25. Contact cup
28. Steering wheel
29. Steering wheel nut
30. Horn button to wheel screw
31. Horn ring to button screw
32. Horn button ring

CONSTRUCTION. Adjustments for the elimination of all play within the steering gear have been provided and these adjustments are external, making it very simple to always keep the steering gear free of lost motion and free of stiffness of operation.

The worm (12) Fig. 346, is mounted in two roller bearings (14 and 15), which run in hardened steel races (13 and 16) adjustable by means of shims (11) located at the bottom between the steering gear housing and the worm housing cover (10).

The roller shaft (7) is fitted in two thin bronze bushings (20) pressed into the housing on Models 10,11,12,14,15,18.

Due to the type and thinness of the roller shaft bushings (20), these parts are not serviced separately. It is necessary to install a new or factory reconditioned housing assembly.

Some of the Models 14, 15, 17 use this bronze bushing and some Models 14, 15, 17 use needle roller bearings.

ROLLER SHAFT MESH IN WORM ADJUSTMENT for closer mesh of the shaft roller with the worm for the elimination of excessive play, is by means of a slotted adjusting screw, the head of which extends out thru the housing cover on the left hand side (Fig. 347). The inner end of the screw is fitted with a hardened steel thrust washer set in a groove in the roller shaft, see (6), Fig. 346.

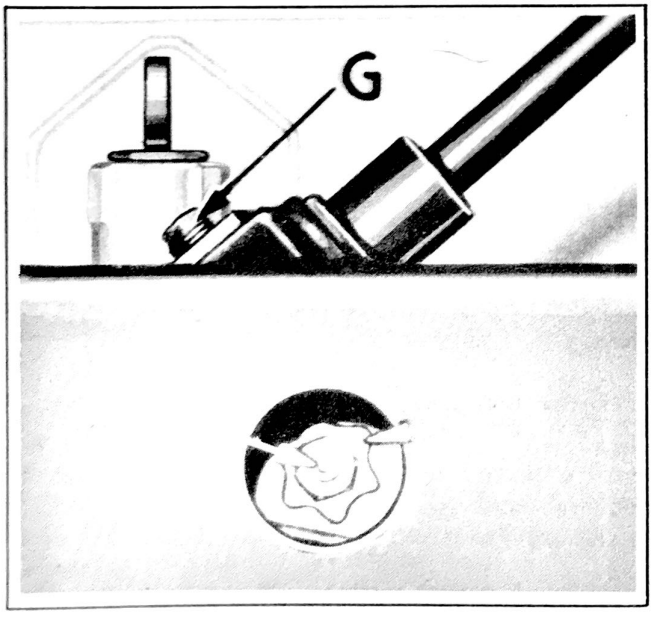

Figure 347
Steering Gear Adjustment and Lubrication

The position of the roller contact with the worm is offset from the center of the worm, hence when the screw is tightened the roller is moved into closer mesh with the worm.

1. Remove the roller shaft adjustment screw lock nut (D), Fig. 347, which is accessible thru a hole in the left frame side rail.

2. Slide the lock plate (E) far enough off to clear the lock boss on the roller shaft cover.

3. Place steering wheel in its mid-position or in the straight ahead driving position.

4. Disconnect drag link at steering gear ball arm.

5. Tighten roller shaft adjusting screw (6), Fig. 346, just enough to remove excessive play between the roller shaft roller tooth and the worm.

6. Check this by determining the amount of play felt at the end of the ball arm.

It is better to leave a slight amount of play at this point than to tighten too much. When tightened beyond the point of taking up lash, serious results will occur that are a detriment to continued good steering gear results.

7. Slide the lock plate (E) in position against the roller shaft cover in its locked position.

8. Replace the roller shaft adjustment screw lock nut (D) and tighten. See "Steering Gear Assembling" for check.

WORM BEARING INSPECTION. It is advisable to check the condition of the worm bearings as follows before starting any adjustment.

1. Jack up the front end of the car.

2. Turn the steering wheel about one turn to the right from a straight ahead driving position.

3. Hold the wheel in this position firmly. This is to prevent any oscillation when the front wheels are shaken violently.

4. Grip the steering column with the other hand just below the steering wheel hub with the side of the finger barely touching the lower end of the steering wheel hub.

5. Have a helper shake the front wheels hard sidewise. Any end play in the worm bearings can be felt at the wheel hub.

6. If any end play exists, the worm bearings need adjusting.

CAUTION: Make certain the end play is plainly felt and do not become confused with play or give in the jacket bushing.

WORM BEARING ADJUSTMENT.

1. Remove the drag link at the steering gear ball arm.

2. Loosen the four worm cover screws (9), Fig. 346, about 1/8".

3. Use a knife and separate the top shim, passing the knife blade all the way around between the shims (11), Fig. 346, being careful not to damage the remaining shims.

4. Remove only one shim at a time and inspect or check as given above before removing any more shims.

5. Revolve steering wheel to determine if any stiffness exists and if it does, too many shims have been removed or the steering gear is misaligned in the car.

HORN BUTTON AND RING. The horn button ring with the horn button is a unit and is held to the wheel by 3 screws that can be removed from underneath.

The horn ring and the brass contact plate are held to the button by 3 screws that can be removed after the unit has been removed from the wheel.

The brass contact plate is the means of contact which permits the horn to be blown by pressure on the ring.

STEERING GEAR ALIGNMENT. Loosen the frame bracket bolts (A), Fig. 345, just enough to allow the steering gear to shift in the frame so as to line up at an angle determined by the height setting of the steering gear bracket on the instrument board.

Retighten the frame bracket bolts.

Loosen the instrument board steering gear bracket and allow it to shift to match the steering gear column position.

Retighten the steering gear bracket.

STEERING GEAR LUBRICATION. Remove oil filler plug (G), Fig. 347, and the vent hole cover.

Fill with S.A.E. 90 E.P. until it comes out of the oil vent.

Replace the oil filler plug and vent hole cover.

Do not use graphite, white lead or heavy solidified oil.

TURNING PULL. The amount of steering pull on the front wheels that is required to turn the wheels is measured with the spring scale hooked over the tread of the tire as follows: -

Disconnect drag link and place roller plates under the front wheels. Use a spring scale as described above.

Models 10, 11, 12, 18 should require 26 lbs. maximum pull.

Models 14, 15, 17 should require 27 lbs. maximum pull.

If greater pull is required to turn the wheels, lubricate the spindle pivot pins and tie rod ends. If this does not reduce the pull required, remove the wheels and tie rod ends and check as noted in "Front Suspension" section.

STEERING GEAR REMOVING.

1. Disconnect battery cable at negative battery post and remove cable clip bolt and nut on fender.

2. Disconnect horn wire at lower end of steering gear.

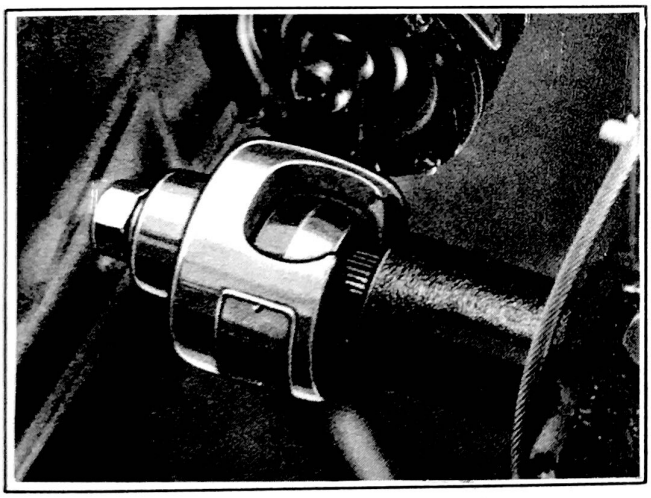

Figure 348
Pitman Arm Puller Tool J-1374

3. Remove steering gear jacket tube, clamp bolt and nut.

4. Disconnect handy shift control wire by removing anchor clip and wire casing anchor bracket.

5. Disconnect handy shift control tube rod at tube lever by removing two nuts, washers and grommets.

6. Remove control tube lower bracket clamp bolt with Allen wrench.

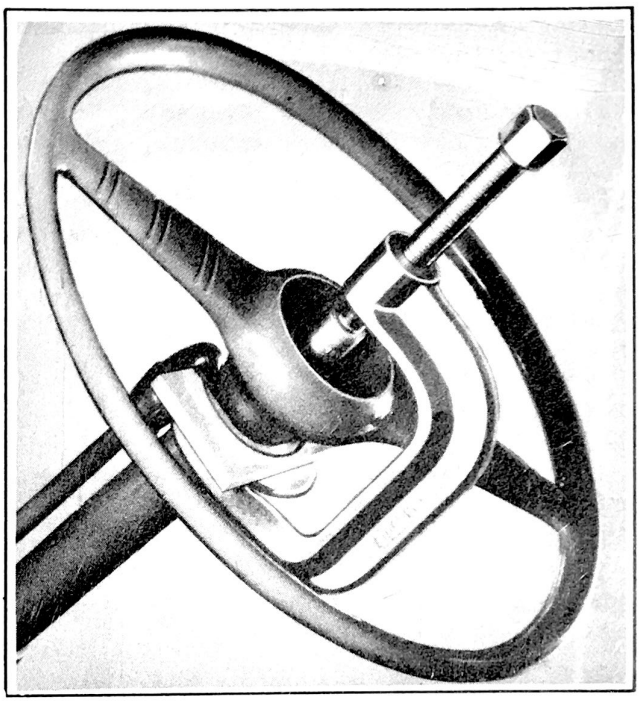

Figure 349 - Removing Steering Wheel

7. Disconnect drag link at pitman arm end.

8. Remove pitman arm with puller J-1374, Fig. 348. Do not drive or pry off as damage will result.

9. Remove horn button and wire.

10. Remove steering wheel nut and steering wheel with puller J 739 and adapter J-739-7, Fig. 349.

11. Remove jacket tube bracket cap and bolts, using a Phillips screw driver.

12. Remove handy shift control tube upper bracket clamp bolt bracket and ring, using a Phillips screw driver.

13. Slide the jacket tube off the steering gear main column tube and out of the jacket tube clamp and control tube lower bracket.

14. Remove the handy shift control tube by working the lower lever up thru the hole in the toe board.

15. Disconnect the radiator stay rod at the dash and push up out of the way.

16 Disconnect bonnet hinge at the bonnet on the right hand side.

17. Remove the steering gear housing mounting stud nuts and washers.

18. Remove the steering gear by raising the lower end up over the engine and out of the right hand side. This can be done by turning the lower end frequently to obtain clearance.

STEERING GEAR INSTALLING.

1. Lay the steering gear across the engine and the right hand fender.

2. Slide the jacket tube clamp and handy shift control tube lower bracket over the main column tube.

3. Insert the steering column main tube through the hole in the toe board and work the steering gear up through the toe board.

4. Insert the rollershaft through its hole in the frame side member.

5. Install the plain washer, lockwashers and nuts on the steering gear housing mounting studs and turn the nuts up until they just start compressing the lockwashers.

6. Insert the lower end of the handy shift control tube and lever through the hole in the toe board.

7. Install the jacket tube over the main column tube and through the hole cover, handy shift control tube lower bracket and jacket tube clamp.

8. Install the jacket tube clamp bolt and parking brake cable and tighten the nut.

9. Place handy shift control tube in position and install the control tube upper bracket and ring on the upper end of the control tube. Tighten the clamp bolt securely so that the upper face of the bracket is 25/32" below the top of the jacket tube.

10. Install the compression spring and washer on the lower end of the control tube. Slide the control tube lower bracket in place and secure in place approximately 7-1/2" above the lower end of the jacket tube.

11. Secure the jacket tube and handy shift control tube to the jacket tube bracket with the cap and its screws.

12. Slide the steering gear hole cover in place.

13. Install the steering wheel, horn wire and horn button. Tighten the steering wheel nut with a torque wrench to 25 foot pounds.

The notch at the top of the steering gear main column tube should be pointing downward and the steering wheel be installed with the two spokes horizontal.

14. Install the pitman arm, washer and nut and tighten with a torque wrench to 140 foot pounds.

15. Revolve the steering wheel to the right and left to align the column and tighten the three gear housing stud nuts at the frame side member.

16. Insert the end of the control wire in the control tube push rod end and secure with the anchor clip.

17. Attach the control wire casing to control tube lower bracket and adjust so that the clearance below and above the anchor clip is equal with the control lever in up position. Tighten bracket bolt.

18. Install control tube rod to lever with grommets, washers and nuts.

19. Attach battery cable to negative battery post. Fasten battery cable clip to fender. Connect horn wire. Fasten radiator tie rod and bonnet hinge.

20. Fill steering gear with S.A.E. 90 E.P. lubricant. See "Lubrication" section.

21. Turn steering gear to the high point mesh and attach drag link to the pitman arm. The wheels should be in a straight ahead position. If adjustment is necessary, proceed as instructed under Drag Link, Page 278.

SETTING FRONT WHEELS IN STRAIGHT AHEAD POSITION. The steering wheel can be turned to bring the steering gear mesh to its high point, where it should be set to insure easy handling.

Remove the horn button and a small notch will be found on the steering gear main column tube. When the wheels are in the straight ahead driving position the notch should be pointing down.

The steering wheel should be installed with the two spokes in a horizontal position.

PITMAN ARM REMOVING.

1. Remove pitman arm nut and lockwasher.

2. Remove pitman arm with tool J 1374.

Do not remove by driving or prying, as damage will result.

Tighten pitman arm nut with a torsion wrench to 140 foot pounds.

STEERING GEAR DISASSEMBLING.

1. Remove the four housing cover screws (1), Fig. 346, and remove the cover (5), also the cross shaft (7).

2. Disengage the cross shaft thrust washer (8).

3. Remove the four worm cover screws (9), the cover (10) and the shims (11).

4. Push the main column tube and worm (12) out of the bottom of the housing which will remove the lower thrust bearing race (13) and upper (14) and lower (15) thrust bearings.

5. Pull the upper bearing race (16).

STEERING GEAR ASSEMBLING. Dip all wearing parts in S.A.E. 90 E.P. Gear oil.

1. Press upper bearing race (16), Fig. 346, in housing.

2. Install the upper worm bearing (14) on the worm and install worm and column (12).

3. Install lower worm bearing (15) and lower bearing thrust race (13) in the housing.

4. Install worm cover (10) shims (11) and the four cover screws (9).

When the cover screws are drawn up tight there should be no perceptible end play in the column and not more than a three quarter pound pull at the rim of the steering wheel should be required to turn the column tube.

Adding shims under the worm cover increases the clearance and reduces the amount of pull required to turn the tube.

5. Engage the cross shaft thrust washer (8) in the groove in the cross shaft and install the cover (5) and gaskets (2) as an assembly. Install oil seal (17) on the worm shaft (7) and press into place.

6. Install the four housing cover screws (1).

7. Install the pitman arm (18) on the cross shaft and the steering wheel on the column tube to check the adjustment. Turn the steering wheel to the exact mid position (high point mesh) of travel.

NOTE: The steering gear shaft nut should be tightened with a torque wrench to 105 foot pounds.

8. If the pitman arm can be moved more than 1/32 of an inch without the main column tube turning the roller shaft, lock screw nut and lock plate should be taken off and the adjusting screw turned in with a screw driver until the movement is reduced to 1/32".

9. If more than 2 pounds pull (using Tool J 544) is required at the steering wheel rim to move it from its mid position, the roller shaft adjusting screw should be turned out.

10. After adjustment replace the lock plate (4) and lock nut (3) and recheck the pitman arm and the pull required to turn the wheel from the mid position.

11. Fill the housing with lubricant - see "Lubrication" section.

DRAG LINK

The drag link on all models is of the same construction on the front and rear ends. The rear end having the shim adjustment for setting wheels in a straight ahead position.

The Models 11, 12, 14, 15 and 17 drag link is 26-11/16" long and the Models 10 and 18 is 21-15/16" long.

DRAG LINK ADJUSTMENT OR STEERING GEAR HIGH POINT.

1. Remove drag link dust cover and bolt and nut and remove covers.

2. Remove cotter pin and rear plug (E).

3. Remove spring (d), Fig. 350, shim pack (A), ball seat (C) and remove Pitman arm ball from drag link.

4. If steering wheel spoke (see Setting Front Wheels in Straight Ahead Position) is more than 2" (measured on the rim of steering wheel) to the left of horizontal, remove the front ball seat and add part of the shims from the front pack (B) to the rear pack (A) and replace the front ball seat (C).

If steering wheel spoke is more than 2" (measured on the rim of the steering wheel) to the right of horizontal, shims should be removed from the rear pack (A) and added at the front pack (B).

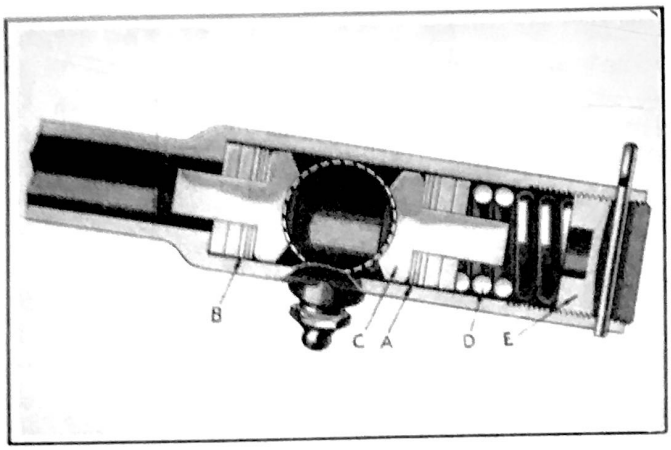

Figure 350 - Drag Link Rear End Showing Shim Adjustment

Each 1/32 inch of shim that is changed will effect the movement of the steering wheel by approximately 3/4 of an inch.

5. Attach drag link to pitman arm ball; install ball seat (C); all of the remaining shims (A); spring (D); and rear plug (E).

6. Plug should be flush with end of drag link and cotter pin inserted and bent over.

NOTE: Tool J 1442, as shown under "Front Suspension" will hold the center steering arm in position for the Steering Gear High Point Adjustment.

DRAG LINK REMOVING.

1. Remove drag link dust cover bolt and nut and remove the dust covers.

2. Disconnect drag link at pitman arm by removing cotter pin and rear plug, spring, washer and ball seat.

3. Pull drag link back and remove cotter key at front ball and socket joint.

4. Lift drag link and move it forward so as to enable the removal of the drag link adjusting plug and ball seat thru the hole in the frame front cross member.

REFERENCES

SOURCE OF INFORMATION	DATE	SUBJECT

CHASSIS

1941 MODEL DESIGNATIONS

To simplify identification of the various models referred to in this Procedure Manual model reference will be made to series numbers listed below:

Models	Series
Six Traveler	10
Six DeLuxe	10
Six Business Cars	10
Super Six	11
Commodore Six	12
Commodore Eight	14
Commodore Eight Custom Coupe	15
Commodore Eight Custom Sedan	17
Hudson Big Boy Business Cars	18

LICENSE INFORMATION

BODY TYPES AND WEIGHTS

HUDSON SIX TRAVELERS 116" Wheelbase--Serial Numbers 10,101 and upward.

3-Passenger Coupe	2850 lbs.
6-Passenger Club Coupe	2950 lbs.
2-Door Sedan	2850 lbs.
4-Door Touring Sedan	2900 lbs.

HUDSON SIX DELUXE 116" Wheelbase --Serial Numbers 10,101 and upward.

3-Passenger Coupe	2900 lbs.
6-Passenger Club Coupe	2950 lbs.
2-Door Sedan	2900 lbs.
4-Door Touring Sedan	2950 lbs.
Convertible	2950 lbs.

HUDSON SIX BUSINESS CARS 116" Wheelbase--Serial Numbers 10,101 and upward.

Utility Coupe	lbs.
Utility Coach	lbs.
Cab Pickup	lbs.
Panel Delivery	lbs.

HUDSON SUPER SIX 121" Wheelbase--Serial Numbers 11,101 and upward.

3-Passenger Coupe	3000 lbs.
6-Passenger Club Coupe	3050 lbs.
2-Door Sedan	3000 lbs.
4-Door Touring Sedan	3050 lbs.
Convertible	3050 lbs.

HUDSON COMMODORE SIX 121" Wheelbase--Serial Numbers 12,101 and upward.

3-Passenger Coupe	3100 lbs.
6-Passenger Club Coupe	3100 lbs.
2-Door Sedan	3100 lbs.
4-Door Touring Sedan	3100 lbs.
Convertible	3100 lbs.

HUDSON COMMODORE EIGHT 121" Wheelbase--Serial Numbers 14,101 and upward.

3-Passenger Coupe	3260 lbs.
6-Passenger Club Coupe	3260 lbs.
2-Door Sedan	3260 lbs.
4-Door Touring Sedan	3260 lbs.
Convertible	3260 lbs.

HUDSON COMMODORE EIGHT CUSTOM COUPE 121" Wheelbase--Serial Numbers 15,101 and upward.

3-Passenger Coupe	lbs.
6-Passenger Club Coupe	lbs.

HUDSON COMMODORE EIGHT CUSTOM SEDAN 128" Wheelbase--Serial Numbers 17,101 and upward.

4-Door Touring Sedan	3400 lbs.
7-Passenger Touring Sedan	3400 lbs.

HUDSON SIX BIG BOY SERIES 128" Wheelbase---Serial Numbers 18, 101 and upward.

Carry-all	lbs.
7-Passenger Sedan	lbs.

ENGINE

Models	No. Cyls.	Bore	Stroke	A.M.A. H.P.	Piston Displacement
10T, 10P, 10C	6	3"	4-1/8"	21.6	175 cu. in.
18P, 18C	6	3"	5"	21.6	212 cu. in.
11, 12	6	3"	5"	21.6	212 cu. in.
14, 15, 17	8	3"	4-1/2"	28.8	254 cu. in.

COMPRESSION RATIO

10T, 10P, 10C ..... 7.25 to 1
11, 12, 18P, 18C ..... 6.50 to 1
14, 15, 17 ..... 6.50 to 1

HORSEPOWER (ACTUAL)

10T, 10P, 10C ..... 92 4000 R.P.M.
18P, 18C ..... 98 4000 R.P.M.
11, 12 ..... 102 4000 R.P.M.
14, 15, 17 ..... 128 4200 R.P.M.

OVERALL HEIGHT

10T, 10P ..... 68"
11,12,14,15,17,18P ..... 68-3/4"
10C, 18C Cab Pickup ..... 81"
10C, 18C Panel Delivery ..... 81"

CAR OVERALL LENGTH
including bumpers.

Model 10 ..... 197"
11,12,14,15 ..... 202"
17, 18P ..... 209"

CAR OVERALL WIDTH
including fenders.

Front ..... 71"
Rear ..... 72-3/4"

TREAD

Front ..... 56-1/4"
Rear ..... 59-1/2"

ROAD CLEARANCE

10T -- with 5.50 tire has clearance front 9-1/4". rear 8".
10P,11 with 6.00 tire has clearance front 9-5/8". rear 8-3/8".
12,14 -with 6.25 tire has clearance front 9-3/4" rear 8-1/2".
15,17 -with 6.50 tire has clearance front 10" rear 8-5/8".

TURNING RADIUS

10T,10P,10C ..... 20'8"
11,12,14,15 ..... 21'1"
17,18P,18C ..... 21'10"

WHEEL AND TIRE SPECIFICATIONS

Models	Standard	Optional	
10 T, 10 Utility Coupe, 10 Utility Sedan ...	16 x 5.50 4-ply	16 x 5.50 6-ply	16 x 6.00 4-ply
		15 x 7.00 4-ply	15 x 7.00 6-ply
10 P, 11	16 x 6.00 4-ply	16 x 6.00 6-ply	15 x 7.00 4-ply
			15 x 7.00 6-ply
12, 14, 15	16 x 6.25 4-ply	16 x 6.25 6-ply	15 x 7.00 4-ply
			15 x 7.00 6-ply
17	16 x 6.50 4-ply	16 x 6.50 6-ply	15 x 7.00 4-ply
			15 x 7.00 6-ply
10 C, 18 C	16 x 6.00 4-ply	16 x 6.00 Truck Air Wheel	
		16 x 6.50 Truck Air Wheel	
		15 x 7.00 Truck Air Wheel	
		16 x 6.00 6-ply	15 x 7.00 6-ply
		16 x 7.00 4-ply	18 x 6.00 4-ply
			18 x 6.00 6-ply

TIRE PRESSURES

	Front		Rear	
	Cold	Hot	Cold	Hot
All passenger models except with 16 x 5.50 tires ..	26 lbs.	29 lbs.	30 lbs.	33 lbs.
All models with 16 x 5.50 tires .	32 lbs.	35 lbs.	32 lbs.	35 lbs.
All Business Series	26 lbs.	29 lbs.	30 lbs.--4-ply	33 lbs.--4-ply
			40 lbs.--6-ply	44 lbs.--6-ply

Wheel and Tire runout ..... 1/16" to 3/32"

PROPELLER SHAFT

PROPELLER SHAFT ..... Tubular

	Length C to C of joints	Length of shaft only
Model 10 without over drive	58-7/16"	55-23/32"
Model 10,11,12,14,15 with overdrive	51-1/8"	48-13/32"
Model 11,12,14,15 without overdrive	58-7/16"	55-23/32"
Model 17, 18 with overdrive	58-1/16"	55-5/32"
Model 17, 18 without overdrive		

CAR NUMBERS

CAR NUMBER PLATE used on 1941 cars is located on the right front hinge pillar and the first two figures of the car number denotes the model. The suceeding figures comprise the actual serial number and these figures are in consecutive order regardless of Model.

Example - 10101 - 11102 - 17103.
First number is a Model 10,
Serial No. 101.
Second number is a Model 11,
Serial No. 102.
Third number is a Model 17,
Serial No. 103.

The engine number is the same as the car number and is located on the top of the cylinder block, right side, between numbers one and two exhaust ports.

The car number plate is also stamped to indicate whether the car is a Traveler, DeLuxe, or Commercial.

Letter T is for Traveler
D is for DeLuxe
C is for Commercial

When a Model 10 car is equipped with the 3" x 5" engine the letter "L" will also be stamped in this space as TL, DL or CL;

BOLT AND NUT TIGHTENING SPECIFICATIONS

The proper tightening of bolts and nuts used on HUDSON automobiles can be the difference between a permanently satisfactory car operation and an unsatisfactory one.

Parts can be tightened too much as well as not enough.

The following tightening chart has been tabulated by HUDSON engineers to provide the mechanic with definite information for the proper tightening of the important bolts and nuts.

	Foot Pounds
Propeller shaft U bolts	20
Clutch and brake pedal rod nuts	22
Brake anchor pin nuts	85
Clutch finger fulcrum nuts	45
Connecting rod bolt nuts	40
Cylinder head studs - 6 cyl. ..	40
Cylinder head studs - 8 cyl. ..	50
Main bearing bolts	75
Flywheel to crankshaft bolts ..	45
Front engine support bolt	45
Clutch cover to flywheel bolts.	22
Steering wheel nuts	25
Wheel nut	65
Rear axle shaft nut	95
Rear spring clip nuts	40
Pitman arm nut	140
Spark plugs	28
Steering arm nut	105
Differential carrier nuts	37
Steering center arm bolt nut ..	65
Water jacket cover bolt	15

FRAME

The chassis frame side members are of box section construction and extend virtually the entire length of the frame. This minimizes the possibility of twisting due to torque loads and road stress.

A frame front fender cross member is riveted to the extreme front end of the frame side rails to support the front fenders.

The front cross member is exceptionally massive and is both welded and riveted to form a sturdy box section to withstand any and all loads imposed on it by the front suspension.

The rear support of the engine is on a frame cross member and the front supports are on the reinforcements riveted and welded to the side members and front cross member.

The extra heavy "X" cross member extends from just forward of the rear engine mounting cross member to the kick up.

The rear axle cross member adds further strength and the frame assembly is tied at the rear by another cross member.

The chassis frame with the above five cross members; "X" member and side members of over seven-inch depth, gives exceptional strength.

On cars equipped with overdrive an extra member carrying a rubber cushioned support is added to the front section of the frame "X" member just ahead of the center point to provide additional support for the overdrive unit.

FRAME FOR CONVERTIBLE MODELS. The inherent rigidity of the closed body does not exist in the convertible body and a special frame is used for those models.

The general design of the convertible frame is the same as for other body styles; however, greater rigidity is obtained through using heavier frame side member reinforcements and frame brace members.

FRAME ALIGNMENT. The diagram shown in Fig. 351 with its table gives the more important dimensions used in frame straightening.

Diagonal measurements should be taken when straightening a frame and the comparison of diagonal measurements from similar points on the right and left side should be equal. These measurements make an excellent check for any out of square condition and alignment.

FRAME STRAIGHTENING in cases of collision that has not bent the frame excessively, is permissable and can be satisfactorily done.

Heat can be applied without materially weakening the steel, however, the heat must be kept below 1200 degrees F. which shows a cherry red in the average shop under a subdued sunlight.

Heating to above this 1200 degrees F. will weaken the steel structure.

In cases of frame repairs and member replacement, where re-riveting is difficult

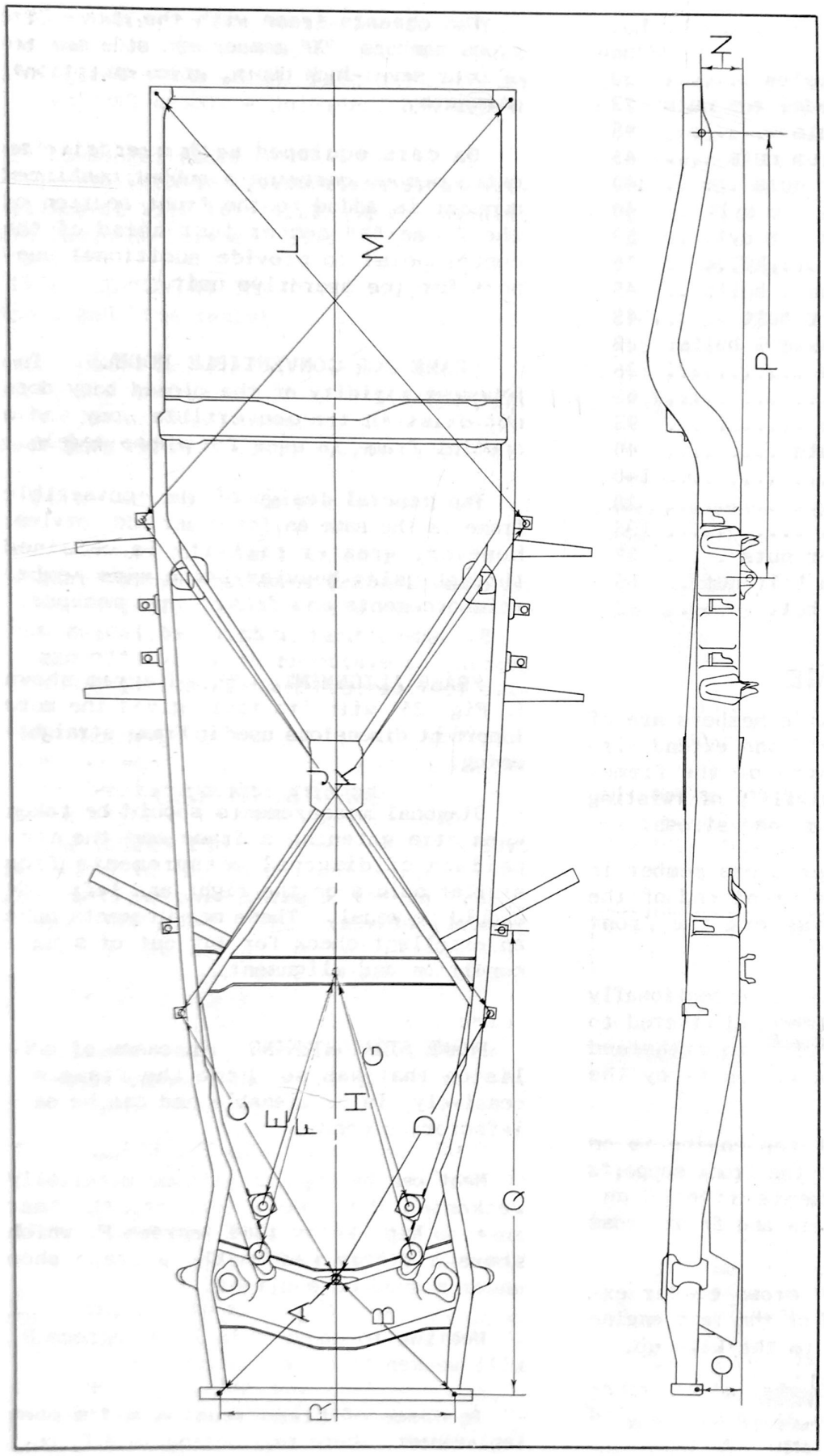

Figure 351 - 1941 FRAME DIMENSIONS

Model	W.B.	A	B	C	D	E	F	G	H	J	K	L	M	N	O	P	Q	R
10	116	21-3/16	21-3/16	35-9/16	35-9/16	30-31/32		30-31/32		78-3/4	78-3/4	74-3/4	71-3/4	4-29/32	5-45/64	57-5/64	54-15/16	30-1/2
11	116	21-3/16	21-3/16	39-25/32	39-25/32	30-31/32		30-31/32		78-3/4	78-3/4	74-41/64	74-41/64	4-15/16	5-49/64	57-5/64	59-15/16	30-1/2
12	121	21-3/16	21-3/16	39-25/32	39-25/32	30-31/32		30-31/32		78-3/4	78-3/4	74-41/64	74-41/64	4-15/16	5-49/64	57-5/64	59-15/16	30-1/2
14	121	21-3/16	21-3/16	39-25/32	39-25/32		37-5/8		37-5/8	78-3/4	78-3/4	74-41/64	74-41/64	4-15/16	5-49/64	57-5/64	59-15/16	30-1/2
15	121	21-3/16	21-3/16	39-25/32	39-25/32		37-5/8		37-5/8	78-3/5	78-3/4	74-41/64	74-41/64	4-15/16	5-49/64	57-5/64	59-15/16	30-1/2
17	128	21-3/16	21-3/16	39-25/32	39-25/32		37-5/8		37-5/8	84-17/32	84-17/32	74-41/64	74-41/64	4-61/64	5-51/64	57-5/64	59-15/16	30-1/2
18	128	21-3/16	21-3/16	39-25/32	39-25/32	30-31/32		30-31/32		84-17/32	84-17/32	74-41/64	74-41/64	4-61/64	5-51/64	57-5/64	59-15/16	30-1/2

or nearly impossible, bolts and nuts having S.A.E. threads may be used. The frame holes must be reamed to the next larger bolt size and the threads of the bolts used must be peened or burred to hold the nut on tightly. Do not use lockwashers under the nuts.

UNIVERSAL JOINTS

PROPELLER SHAFT AND UNIVERSAL JOINTS. The propeller shaft is of tubular construction with needle roller bearing type universal joints.

UNIVERSAL JOINT REPAIR KIT. A repair job on a universal joint usually requires the replacement of the journal; journal bearing assemblies and snap rings.

A service repair kit is available thru the Parts Department which contains -

1 Journal
4 Journal Bearing Assemblies
4 Journal Bearing Snap Rings

LUBRICATION. Every 20,000 miles the universal joint bearings should be disassembled, cleaned and repacked with viscous chassis grease.

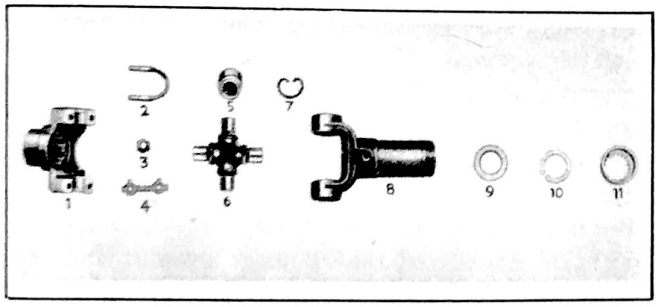

Figure 352 - Universal Joint Construction

1. Companion Flange
2. Propeller shaft U bolt
3. Propeller shaft U bolt nut
4. Propeller shaft U bolt lock
5. Journal bearing assembly
6. Journal
7. Journal bearing race snap ring
8. Sleeve yoke assembly
9. Sleeve yoke dust washer
10. Sleeve yoke dust washer retainer
11. Sleeve yoke dust cap

The splined end of the propeller shaft should be lubricated every 1,000 miles by removing the plug in the universal joint sleeve and inserting a grease fitting.

The fitting should be removed and the plug replaced because the propeller shaft balance may be disturbed if it is not.

PROPELLER SHAFT AND UNIVERSAL JOINT REMOVAL.

1. Remove the four nuts and lock plates on the U bolts at both ends of the propeller shaft and remove the U bolts. The propeller shaft and the two bearing assemblies can then be removed. Do not allow the bearing cups to fall of the journal.

2. The remaining two bearings now can be removed by compressing the snap rings.

3. Use a soft hammer and tap on one bearing carefully to drive out the opposite bearing cup and rollers.

4. Tap on the end of the journal from which the bearing was just removed and remove the remaining bearing cup and rollers. The bearing cups have a light press fit.

5. Wash all parts in gasoline and examine for wear.

NOTE: The bearing surfaces on the journal should be free of grooves or ridges. The bearing cups should be checked for grooves and chipped edges.

PROPELLER SHAFT AND UNIVERSAL JOINT RE-ASSEMBLY.

1. Pack all bearing assemblies with viscous chassis lubricant.

2. Use new oil seals on the inner end of the journal.

3. Hold the yoke and journal so that one bearing assembly can be inserted from the bottom.

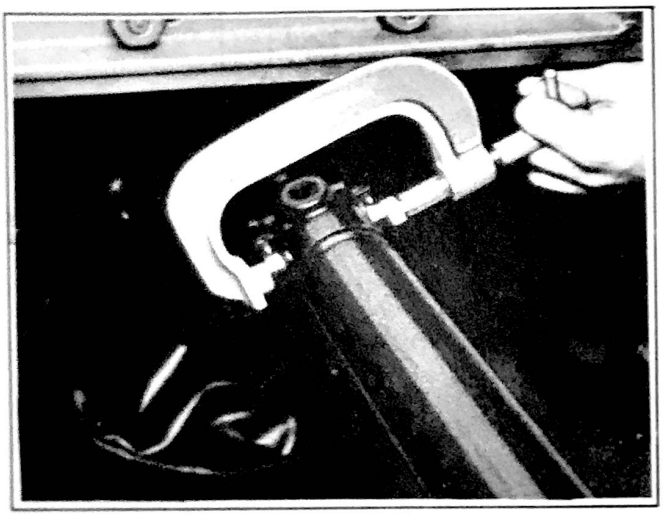

Figure 353
Universal Joint Bearing Tool J-881

4. Hold the yoke and journal so that the other bearing assembly can be inserted from the bottom. The rollers in their race will not fall out if installed from the bottom.

5. Install the journal bearing race snap ring.

6. Install the other two bearing assemblies on the journal and compress them with the universal joint assembling tool J 881 (Fig. 353).

7. Install the U bolts, lock plates and nuts.

NOTE: The ears on the lock plates must be turned over the nuts. The complete assembly of the propeller shaft and universal joints has been accurately balanced at the factory and to preserve this balance in the car the arrow on the spline end of the propeller shaft and the arrow on the front universal joint yoke must be lined up.

If these arrows are not lined up, it will cause rough car operation which will cause rapid wear or failure of parts and put an unbalanced load on the transmission, clutch, engine, and rear axle.

Propeller shaft U bolt nuts should be tightened with a torsion wrench to 20 foot pounds.

MUFFLERS AND EXHAUST PIPES

The muffler used on Models 10,11,12, 18 has a 2" inlet and 1-1/2" outlet. Models 14,15,17 use a muffler with a 2" inlet and 1-7/8" outlet.

The sheet steel muffler head deflector is used on Models 14,15,17 which is welded to the muffler and insulates the body from the heat of the muffler.

MANIFOLDS

The intake and exhaust manifolds are separate castings bolted to the cylinder block and also to each other as these have inter-connecting passages through which the exhaust gases flow to heat the fuel mixture.

Be sure to use new gaskets when replacing manifolds to assure proper seal and preclude the possibility of exhaust gas or air leaks.

Models 10 and 18 with single carburetors are fitted with a manual heat control valve mounted at the center of the exhaust manifold. This valve should be set to the "W" position, that is with the pointer sloping to the rear and should remain in this position for all seasons operation. Models 11,12,14,15 and 17 equipped with duplex carburetors are fitted with an automatic heat control valve. This valve is operated by a thermostatic spring which regulates and controls the heat to the intake manifold under all operating conditions.

HEAT CONTROL VALVE REMOVAL - Models 10 and 18.

Remove carburetor.
Remove two heat control valve retainer nuts.
Remove heat control valve retainer.
Remove heat control valve.
To replace, reverse order of removal.

HEAT CONTROL VALVE REMOVAL - Models 11 and 12.

Remove carburetor.
Remove valve rod springs.
Remove retainer pins.
Remove stud nuts.
Remove heat control valve assembly.
To replace, reverse order of removal.

HEAT CONTROL VALVE REMOVAL - Models 14, 15 and 17.

Remove carburetor connections.
Remove exhaust manifold.
Remove damper springs.
Remove retainer pins.
Remove stud nuts.
Remove damper assembly.
To replace, reverse order of removal.

EXHAUST PIPE - REMOVAL.

Disconnect pipe at manifold.
Disconnect pipe at muffler.
Remove pipe.
To replace, reverse order of removal.

EXHAUST PIPE FLANGE OR FLANGE GASKET - REMOVAL.

Disconnect exhaust pipe at muffler.
Remove pipe to manifold bolts and slide off flange and remove gasket.
To replace, reverse order of removal.

MUFFLER ASSEMBLY - REMOVAL.

Disconnect exhaust pipe at muffler.
Disconnect tail pipe at muffler.
Remove muffler.
To replace, reverse order of removal.

MUFFLER AND EXHAUST PIPE - REMOVAL.

Disconnect exhaust pipe at manifold.
Disconnect tail pipe at muffler.
Remove muffler and exhaust pipe.
To replace, reverse order of removal.

MUFFLER TAIL PIPE - REMOVAL.

Disconnect tail pipe at muffler.
Disconnect tail pipe at tail pipe clamp.
Remove tail pipe.
To replace, reverse order of removal.

TIRES AND WHEELS

REMOVAL OF TIRE. Deflate the tube and starting directly opposite the valve stem and working in both directions toward the valve, press both beads of the tire off the rim ledge down into the rim well. Start removal of one bead at the valve stem, working around the wheel in both directions from this point. Pull the valve back inside of the rim, remove inner tube, and remove the second bead by the same procedure used to remove the first.

When the tube is inserted in the casing, the valve should be in line with the red dot on the tire side wall. This insures the minimum out of balance which can be obtained with this particular tire and tube assembly. However, if the tire has been in use for several thousand miles it does not insure a proper balance. (See wheel balancing.)

TO INSTALL A TIRE, inflate the tube until just rounded out and insert into the casing, with the valve in line with the red dot on the tire side wall. Place one bead over the rim and into the rim well at one point so that the remainder of the bead can be worked over the rim. Press this bead onto its rim seat and insert valve stem through the hole in the rim. After the valve is aligned in the hole, start application of the second bead directly opposite the valve, pressing it into the rim well and working in both directions so that the section of the bead at the valve is the last to be worked onto the rim.

Readjust, if necessary, so that the valve protrudes straight through the rim and pull the valve through from outside until seated snugly against the inside of the rim.

Partially inflate and work both beads onto the rim seats, then complete inflation.

TIRE INFLATION. The stability of the car on the road, particularly at speeds over 50 miles per hour depends to a large extent on the tire pressures. To get maximum stability all tires should deflect the same under the load that the car is carrying. It is more desirable that the rear tires do not deflect as much as the fronts and since the variable load in a passenger car is mainly in the rear, the pressure in the front and rear tires should be such that with maximum passenger load the rear tires do not deflect more than the fronts.

When there is doubt about the deflection of tires, it can be checked by measuring the tire across the side walls, just above the road contact, taking the maximum measurement on each tire with a large pair of calipers. If, however, all tires are of the same make and style and all equally worn, the measurement can be taken from the ground to the lowest point of the wheel felloe.

The pressures which will give equal deflection on both front and rear tires, used as original equipment on the various Hudson models, will be found in the "Wheels and Tires" chart below.

TIRE WEAR, although actually more rapid on rear tires, is usually more uniform than on front tires. The rear tire treads are flexed (distorted) in one direction while the engine is driving the car and in the opposite direction when the brakes are applied which accounts for their even wear.

The front tire treads are flexed in the same direction when the car is being driven as when the brakes are applied. This tends to cause spotty wear, particularly if there are any cross-wise lines in the tread design. When the tread consists wholly or partially of blocks, this wear is usually first noticed as a high point or ridge at the back of the block as it rests on the ground. This high or unworn portion is forced down into the tread groove when the brakes are applied, while the forward portion of the block, being backed by the remainder of the block, stands up and is subjected to the braking action and wears more rapidly.

If this condition is allowed to continue it will sooner or later (depending upon driving speed and severity of brake applications) develop into a wavy or spotty wear. If, however, the right and left front wheels and tires are interchanged to reverse the tire rotation when the first uneven wear is readily noticeable (usually from 3,000 to 5,000 miles), the tire wear will become uniform and in most cases remain so. However, under fast driving and severe brake usage the original conditions may again develop but this time on the reverse side of the tread blocks, making a second change necessary.

Do not be too hasty in diagnosing uneven tire wear or improper front wheel alignment as there are other conditions which can be much more readily checked and which may be the cause.

The following conditions should always be checked when uneven tire wear is encountered and in the order listed.

TIRE PRESSURE: It is important that the recommended pressure be maintained. Tire pressures must be checked at least weekly in the summer.

MILEAGE OF TIRE in its present position: 10,000 miles of reasonably hard driving will cause a very spotty wear on front tires. In severe cases put front wheel and tire assemblies on opposite side at rear.

WHEEL BALANCE: An unbalanced condition will cause spotty wear and in extreme cases will cause tramp at certain speeds. (See "Wheel Balance" in this section.)

WHEEL BEARINGS: Loose or worn wheel bearings, permitting the wheel to wobble, will cause scuffing of tires or even permit brakes to drag intermittently.

BRAKES: Dragging brakes and particularly with eccentric drums will cause spotty wear. Be sure the brake backing plates are mounted securely on the spindles.

FRONT WHEEL ALIGNMENT: If the above checks fail to reveal the cause of the tire wear, a complete alignment test should be made. Alignment procedure is given complete in "Section II."

WHEEL AND TIRE BALANCE as previously pointed out is very important both for preventing uneven tire wear and also for proper handling of the car at speeds over 50 miles per hour.

All tires used on HUDSON models are balanced before being assembled to the car. The tire side walls are marked with a red dot to indicate the position in which the valve stem should be placed in order to preserve the original balance.

Tire wear or tire repair will, however, affect the balance. This is relatively unimportant on rear tires but very important on front tires.

Front wheel and tire assemblies should be rebalanced every six months on cars driven over 50 miles per hour and

After every front tire change.
After every front tire or tube repair.
After every front wheel change.

FRONT WHEEL BEARING ADJUSTMENT. Jack up the wheel so that it will revolve.

Remove outer and inner hub caps.

Remove cotter pin and turn nut to the right sufficiently to insure that parts are properly seated and then back off the nut until a slight drag is felt when turning the wheel by hand. Loosen the nut sufficiently to allow the wheel to turn freely.

Insert cotter key and clinch it.

Install inner and outer hub caps and lower car to the floor.

WHEEL AND TIRE RUN-OUT. Lateral run-out or trueness of the wheel can be checked with a gauge and a piece of chalk.

The allowable run-out or eccentricity is from 1/16" to 3/32". More than this should be corrected.

Mark the spot on the wheel or tire where the most run-out occurs and if it is found necessary to check caster or camber, the place where the chalk mark is should be placed toward the front of the car and in checking toe-in it should be placed at the top of the tire.

BALANCING THE WHEEL AND TIRE. Wheel balance is the equal distribution of the weight of the wheel and tire assembly around the axis of rotation (static balance) and through the center line of the wheel and tire (dynamic balance).

There are two ways in which every wheel must be balanced--
Statically
Cynamically

Wheel unbalance is the principal cause of tramp and contributes to other steering difficulties.

TIRE BALANCE SPECIFICATIONS AND MARKINGS. Tires installed at the HUDSON factory are marked so that the light weight portion of the casing is counterbalanced by the heavy weight portion of the tube.

A red triangle balance mark is placed on the tire and the valve stem should always be located at this mark.

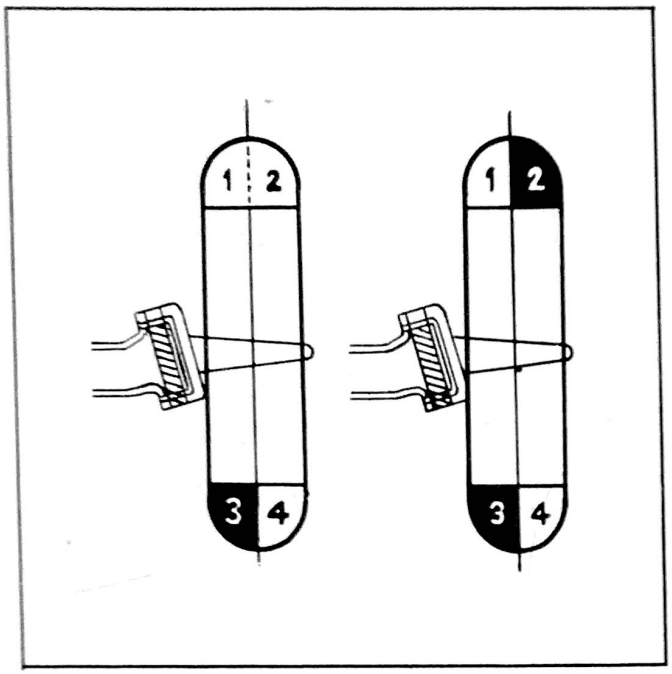

Figure 354 - Static Balancing

Due to irregularities in tread wear, caused by sudden brake applications, misalignment, low inflation pressure, or tube and casing repairs, a casing and tube can lose its original balance.

If the action of the front wheels cause a disturbance at the steering wheel, the first items to check are pressures and the balance of the tire and wheel.

The balance of wheels and tires is maintained within 10 inch ounces.

STATIC OR STILL BALANCE IS THE EQUAL DISTRIBUTION OF THE WEIGHT OF THE WHEEL AND TIRE ASSEMBLY ABOUT the axis of rotation in such a manner that it has no tendency to rotate by itself regardless of the position of the wheel and tire.

Static unbalance of a wheel causes a hopping or pounding action (up and down) which leads to road tramp, high speed shimmy and excessive tire wear.

Static unbalance of a tire and wheel causes the heavy portion (3) to go to the bottom as in Fig. 354 and to obtain a true static balance, weights will have to be added on the rim opposite the heavy portion that went to the bottom.

The Combination Static and Dynamic Wheel Balancer KMO 55-J will statically balance a a wheel and tire assembly so as to give equal weight distribution.

To balance the wheel and tire assembly a small piece of putty may be used instead of fastening the regular weights onto the rim. The quantity of putty may be added to or reduced until the static balance is obtained, as in Fig. 354. The putty can then be weighed and balanced weight or weights attached permanently to the rim to correspond to the weight of the putty. The sum of the weights of section (1) and (2) is equal to the sum of the weights of section (3) and (4) Fig. 354, the weight, therefore, is equally distributed about the axis of rotation. The weight at (2) being balanced by the weight at (3). However this wheel is not in dynamic balance because section (1), Fig. 354, is lighter than section (2) and section (4) is lighter than section (3).

Dynamic or running balance requires a wheel to be first in static balance and to also run smoothly at all speeds on an

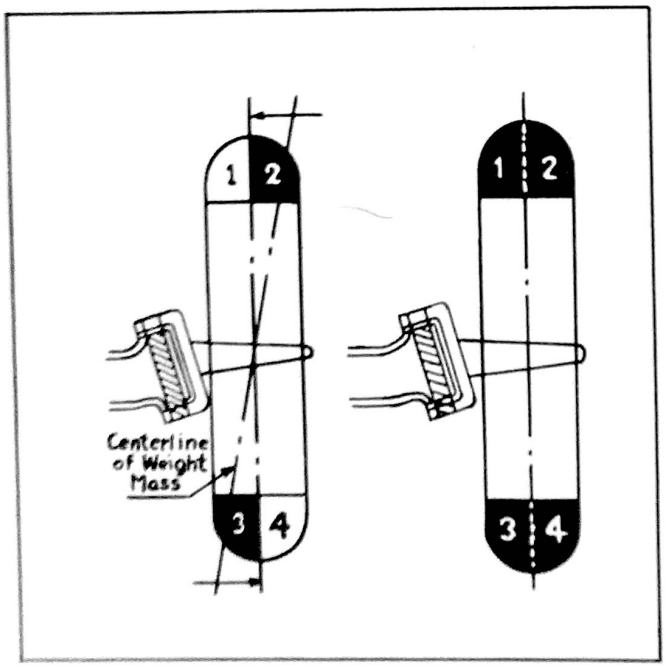

Figure 355 - Dynamic Balancing

axis that passes through the center line of the wheel and tire and is perpendicular to the axis of rotation.

The wheel and tire is in static balance as shown in Fig. 354, however, with reference to the center line, section (1) is lighter than section (2), also section (3) is lighter than section (4).

This wheel, when started spinning, will cause a center line through the weights at (2) and (3) to attempt to get at right angles to the rotation axis Fig. 355, which exerts a force on the wheel to try to obtain a new center line and thus change the axis of rotation. The wheel in spinning, therefore, tries to equalize the weight at (2) and (3) by moving the center line first in one direction and then in another, causing the wheel to try to rock first in one direction and then another, producing a wobble or shimmy which increases with high speeds.

Weights must be added to (1) and (4), Fig. 355 to equal the weight in sections (2) and (3), and in Fig. 355 the weight is evenly distributed about both the axis of rotation and the center line of the wheel. This wheel is statically and dynamically balanced.

NOTE: A wheel assembly must be statically balanced before it can be dynamically balanced. The wheel assembly must be clean and free of all dirt, weights etc. The tires must be in good condition; properly mounted with the balance mark on the tire lined up with the valve stem in the tube. Bent wheels must be replaced or straightened before being balanced. Tire valve caps must be in place.

THE COMBINATION STATIC AND DYNAMIC WHEEL BALANCER KMO 55-J is available through the Hinckley-Myers Co., Jackson, Michigan, and uses one mounting for both static and dynamic balancing.

The vertical position of the wheel permits balance weights being applied from either side of the wheel.

BALANCING WEIGHTS clip over the edge of the wheel rim and are tapped in place with a hammer.

SHIPPING BRACKETS

All cars shipped by freight have an extra bracket assembled to the right and left sides of the frame thru holes provided and the purpose of this is to tie the car down against movement during transit.

The bracket bolts, brackets and tie down chains must be removed upon arrival of the car at its destination.

REFERENCES

SOURCE OF INFORMATION	DATE	SUBJECT

SHEET METAL

BONNET centering between the fenders and at the cowl is taken care of by adjustments as given below.

The bonnet hinge is "U" shaped and composed of arms with a cross bar. The cross bar has a loose fitting bracket which has a serrated face and is fastened to the frame bracket which also has a serrated face by screws; The frame bracket is fastened to the frame by bolts. The end of the cross bar has thick and thin washers held on it by a large cotter pin for positioning the hinge assembly.

Loosening the bonnet hinge adjusting bolts allows the bonnet to be shifted forward or backward for the fullest possible adjustment.

Loosening the bonnet hinge frame bracket bolts allows a slight shifting of the bonnet sidewise or lengthwise.

The fender braces are fastened to the frame at one end and to the fender at the other end. It has a lock nut and a holding nut.

The fenders can be moved at their front end by shortening or lengthening the rod, thereby moving the fenders further away from the bonnet or bringing them closer to it.

Determine what places are out of adjustment and depending upon the amount of correction needed, proceed as follows:

Hinge frame bracket	will allow	Slight lengthwise and slight sidewise adjustment.
Hinge adjusting bolts	will allow	Slight sidewise and slight lenthwise adjustment.
Fender adjusting brace rods	will allow	Full sidewise adjustment of fender at the front end.
Louvre panel bolts	will allow	Line up of louvre panel-always push entire panel forward as far as possible.
Hinge adjusting thick and thin washer	will allow	sidewise movement of cross bar shaft assembly.

BONNET REMOVING. Unlock and raise bonnet.

Remove the bolts holding bonnet support to bonnet.

Remove bonnet light wire terminals from fender junction.

Remove bonnet to bonnet hinge bolts.

Remove bonnet by lifting straight up.

BONNET MOULDINGS AND ORNAMENTS are held by clips, speed nuts or studs cast in the ornament, using hexagon nuts and lockwashers.

The fastening devices can be reached from inside the bonnet and in the case of the mouldings on the front end of the bonnet, they can be reached from the front of the car.

BONNET HINGE ASSEMBLY - REMOVING AND REPLACING.

Remove bonnet.

Remove bolts, holding the adjusting bracket to the frame bracket.

To replace, reverse procedure of removal. Align bonnet as outlined under "Bonnet Alignment".

BONNET SUPPORT ARM REMOVING, is by two bolts holding support arm to fender and top screw holding support arm to bonnet.

The coil spring can be replaced by pulling it loose from its seat.

BONNET LAMP BULB OR LENS REMOVING AND REPLACING. To replace the bulb, raise the bonnet and pull the bulb out of the lamp housing. To replace the lens, remove the nuts attaching the housing to the bonnet. Lift out the housing and lens.

BONNET SIDE NAME PLATE consists of the name plate with ornament and the letters in the name HUDSON. The name plate is assembled with 6 nuts, lockwashers and plainwashers. The ornament is assembled with 8 speed nuts and the letters in the name HUDSON are assembled with 24 speed nuts.

RADIATOR LOUVRE PANEL ASSEMBLY REMOVING.

Remove bolts and washers from underneath the fender.

Remove the center front screw from underneath.

Remove the front bolt fastening the bumper assembly and loosen the rear bolt, thus allowing the bumper assembly to drop down.

Remove louvre panel assembly and lay it carefully to one side to avoid scratching.

REMOVING RADIATOR LOUVRES FROM PANEL.

Remove louvre panel assembly as shown above and the louvres and center moulding can be removed by taking out screws and washers.

RADIATOR LOWER TANK SHIELD REMOVING.

Remove radiator louvre panel assembly.

Remove fender brace rods.

Remove cap screws holding fender brace rod to frame.

Remove screws holding radiator lower tank shield to fender.

Remove center screw holding radiator lower tank shield to fender support.

FENDERS

FRONT FENDER REMOVING AND REPLACING.

Unlock and raise bonnet.
Disconnect head lamp bonnet and fender lamp wires at fender junction.
Release wires from fender clips.
Push headlamp and fender lamp cables through the cable hole in fender.
Remove fender to running board bolts.
Remove fender brace rod top nut.
Remove louvre panel to fender bolts.
Remove fender to fender cross member bolts and spacers.
Remove fender brace to fender cross member screw.
Remove radiator core baffle to fender screws (right fender only).
Remove radiator lower tank shield to fender screws.
Remove bonnet support to fender screws.
Remove fender apron support to inspection cover screw.
Remove horn bracket to frame screws.
Remove fender.

NOTE: The battery, which is on the left front fender, must be removed when removing or replacing the left front fender.

REAR FENDER - REMOVING AND REPLACING.

Remove wheel and tire assembly.
Remove fender brace to body bolt.
Remove fender to body bolts.
Remove fender.
To install, reverse order of removal.

RUNNING BOARDS

RUNNING BOARD ASSEMBLY REMOVAL.

Remove running board to front fender bolts.
Remove running board to frame bolts.
Remove running board to running board bracket bolts.
Remove running board.
To install, reverse order of removal.

In changing over from running boards to a car without running boards, the service kit should be ordered stating the model of car.

The service kits are as follows:
Service Kit - Models 10T, 10P and 10 Utility Coach
Service Kit - Models 11,12,14 and 15.
Service Kit - Models 17 and 18P.

The kit consists of -
Underbody extension finish mouldings
Underbody extension moulding bolts
Underbody extension moulding bolt nuts
Underbody extension moulding washers
Underbody extension moulding lock washers
Rear fender stone protector - right
Rear fender stone protector - left
Rear fender stone protector wedges
Rear fender stone protector screws
Rear fender stone protector screw washers
Rear fender stone protector screw lock washers
Rear fender stone protector screw nuts
Front fender splash apron assemblies
Front fender trim mouldings
Front fender trim moulding bolts
Front fender trim moulding bolt washers
Front fender trim moulding bolt nuts
Template for cutting rear fender for stone protector installation.

RUNNING BOARD REMOVAL FOR CHANGE OVER

Remove running board to front fender bolts.
Remove running board to frame bolts.
Remove running board to running board bracket bolts.
Remove running board brackets.
Remove running boards.
Lay out and drill holes for stone protector on rear fenders, using template supplied in kit.
Install stone protectors on rear fenders.
Install underbody extension finish moulding.
Install front fender finish moulding.
Install front fender splash apron assemblies.

When a change over of a car without running boards to a car with running boards is made, the proper running board kit should be ordered.

The running board kits are as follows:-
Running Board Kit - Model 10
Running Board Kit - Models 11, 12, 14, 15
Running Board Kit - Models 17, 18.

The kit consists of -
Running board assembly - right
Running board assembly - left
Trim moulding kit
Running board attaching bolt
Running board attaching bolt lock washer
Running board attaching bolt washer
Running board bolt
Running board bolt lock washer
Running board bolt nut
Running board bolt washer
Running board bracket - front
Running board bracket - center and rear

INSTALLING RUNNING BOARDS ON CARS NOT SO EQUIPPED.

Remove underbody extension finish moulding.

Remove front fender trim moulding.

Install running board brackets.

Install running board and trim mouldings.

RUNNING BOARD MOULDING KIT

Model 11, 12, 14 consists of -
Side trim moulding, Right or Left
Top outer trim moulding, Right or Left
Top, No. 1 trim moulding, Right or Left
Top, No. 2 trim moulding, Right or Left
Top, No. 3 trim moulding, Right or Left
Top, No. 4 trim moulding, Right or Left
Outer moulding bolt, nut, lockwasher
Clip for No. 1, 2, 3, 4 mouldings
Clip for side moulding

Model 10 consists of -
Same parts as above, except mouldings are of a different length.

All running boards have holes for the mouldings, however, if the mouldings are not standard equipment the rubber is not punched thru, thereby covering the holes. Punch thru the rubber from underneath.

RUNNING BOARD SIDE MOULDING KIT

Consists of the following for Model 10 -
1 Side trim moulding, Right
1 Side trim moulding, Left
20 Side trim moulding clips

Model 11 requires -
1 Side trim moulding, Right
1 Side trim moulding, Left
20 Side trim moulding clips

REFERENCES

SOURCE OF INFORMATION	DATE	SUBJECT

BODY

CONSTRUCTION. The Hudson built all-steel body consists of five assemblies all welded together and bolted with numerous bolts to the chassis frame. The five body units are:

FLOOR, which is a single steel stamping that has many bolts fastening it to the chassis frame and to this floor the side panels and pillars are welded or riveted, making one solid unit with the frame. This floor or underbody panel, as it is known, has reinforcements at all necessary points where there is a possibility of strain. The reinforcements are securely spot welded. The underbody panel assembly consists of -

Underbody panel
Underbody panel seat reinforcement assembly
Underbody panel body bolt reinforcement at the front and rear pillars.
Underbody panel extensions
Center pillar to underbody bracket and reinforcement assembly
Rear pillar to underbody bracket and reinforcement assembly

QUARTER PANEL assembly is a unit composed of small stampings and the rear pillar (on 2 door sedans and coupes), also the lock pillar. The quarter panel unit consists of -

Quarter panel, Right or Left
Rear pillar assembly
Rear seat back compartment panel to quarter panel bracket
Quarter window drain trough assembly, Right or Left
Quarter panel trim retainer clip
Rear pillar to wheelhouse reinforcement and bracket assembly
Quarter panel wiring clip

FRONT END assembly is a unit composed of the complete front end of the body, from the dash panel back to the front door pillar. The unit consists of -

Front end panel assembly
Dash panel assembly
Instrument panel assembly
Front pillar to dash bracket and toeboard riser assembly
Toeboard riser to dash panel rivet

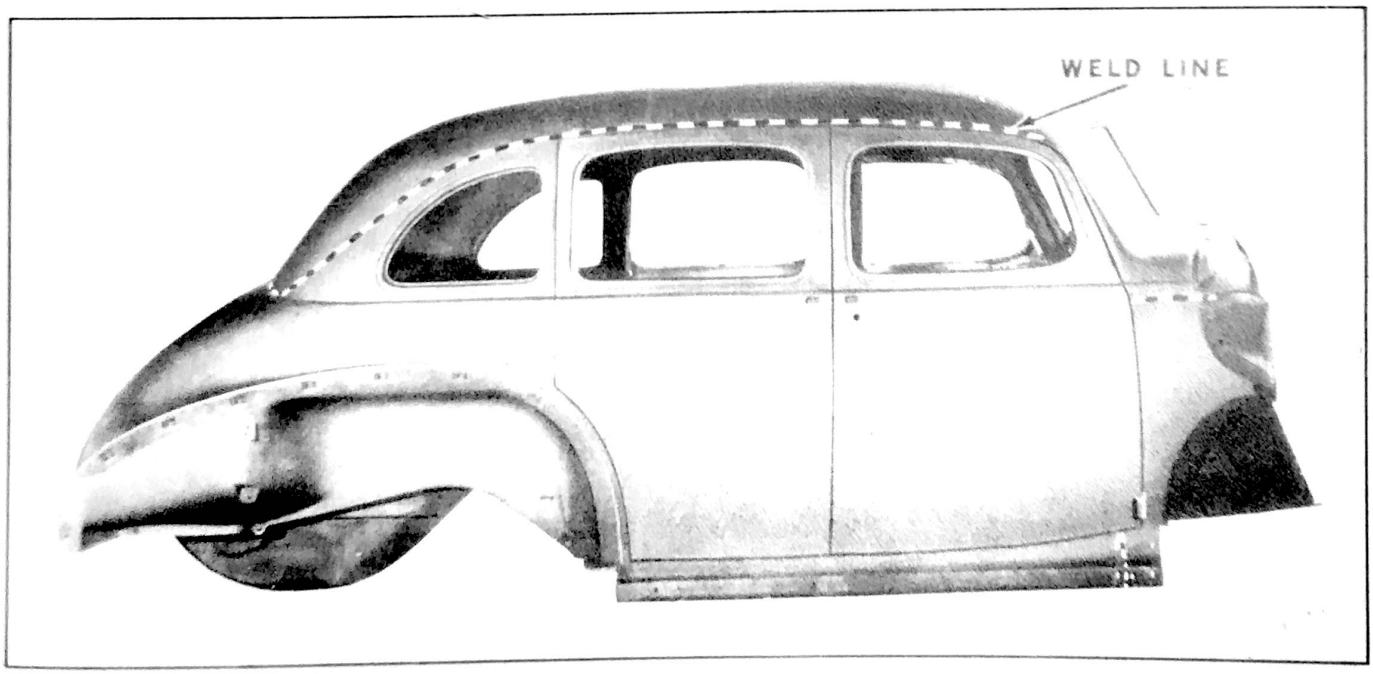

Figure 358 - Four Door Sedan Body

Cowl ventilator air duct assembly
Cowl ventilator air duct to dash panel bolt, lockwasher and plain washer
Cowl ventilator air duct to dash silencer
Front pillar assembly, Right or Left
Windshield header assembly
Radiator stay rod dash bracket, riveted in place.

This completes the body structure that is bolted to the floor or underbody and leaves the roof panel (a one piece stamping) and the doors to complete the body shell.

ROOF PANEL extends from the windshield opening to the rear compartment (trunk), See Fig. 358, and is welded to the front end panel, body header and quarter panels.

FRONT END WELD POINTS. See Fig. 359. The front end panel is welded to the top panel at (1, Fig. 359). These joints are soldered after welding and can be located by running the solder out of the joint with a torch.

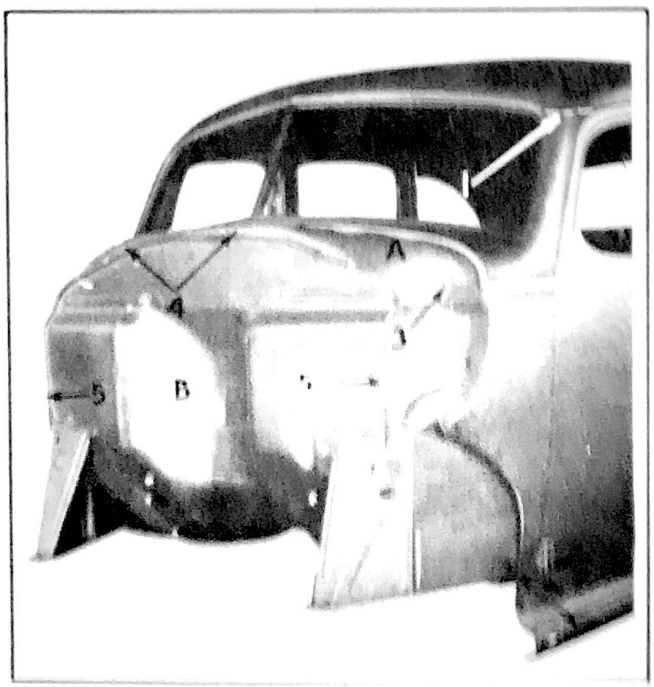

Figure 358
Front End Assembly - Front View

The cowl side panel is welded to the underbody panel extension at (2), Fig. 359, and to the front end panel at (3).

The dash panel is welded to the front end panel at (4), Fig. 359, to the cowl side panels at (5), to the front pillar to dash bracket and toe board riser at (6).

The front pillars are welded to the body header at (1), Fig. 360, to the windshield header at (2), to the instrument panel at (3), to the cowl side panel at (4), to the toe board riser at (5) and to the underbody panel at (6).

The front pillar to dash bracket and toe board riser is welded to the front pillar at (5), Fig. 360, and to the dash panel at (7 and 8).

The instrument panel is welded to the front end panel at (9), Fig. 360, and is welded and riveted to the front pillar reinforcement at (1), Fig. 360.

The windshield header is welded to the front pillars at (2), Fig. 360, and to the front end panel at (10).

The front end assembly consists of -
Front end panel assembly
Dash panel assembly
Instrument panel assembly
Front pillar to dash bracket and toeboard riser assembly
Toeboard riser to dash panel rivet
Cowl ventilator air duct assembly
Cowl ventilator air duct to dash panel bolt
Cowl with lockwasher and plain washer
Cowl ventilator air duct to dash silencer
Front pillar assembly
Windshield header assembly
Radiator stay rod dash bracket with rivet

ROOF PANEL WELD POINTS. See Fig. 361. The roof panel extends from the windshield opening to the rear compartment opening.

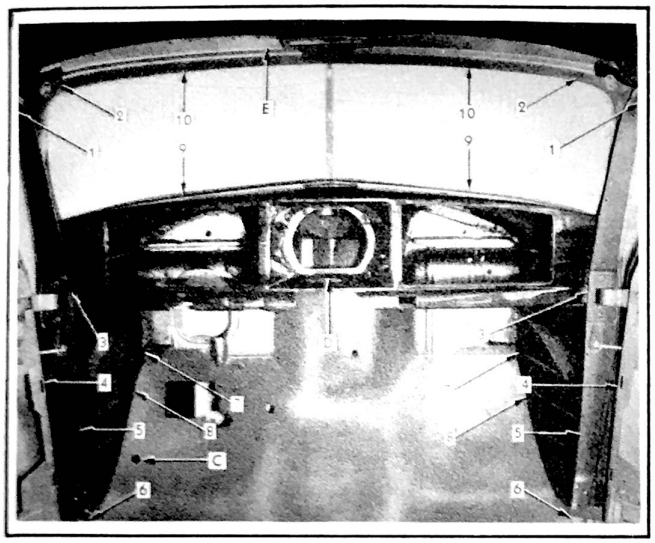

Figure 360
Front End Assembly - Rear View

It is welded at the front end panel at (1), Fig. 361, to the body header at (2), to the body header along point (3) and to the quarter panel along (4).

The rear window frame (1), Fig. 362, is welded to the roof panel and is accurately assembled to the correct size before it is welded in place. Do not disturb this frame - cut around it.

The rear compartment door frame (2), Fig. 362, is welded to the roof panel, to the quarter panels at (3) and to the rear lower panel at (4). The frame is accurately assembled and held to the correct size before it is welded to the above parts. Do not disturb the frame - cut around it.

The roof panel weld line extends from the windshield to the rear window and from the drip moulding line on the one side to the drip moulding line on the other, see Fig. 358.

The sides of the roof panel have both a flange joint part way and a flat lap joint the rest of the distance. The flange extends from the front end all along the drip moulding joint and beyond, to the point where the body line continuing back from the end of the drip moulding blends into the rounded contour at the rear quarter just above the trunk lid. The weld at this point becomes a flat lap weld which continues to the end of the roof panel at the rear compartment opening. The roof panel from the front end to the end of the drip moulding, is welded to the body header and to the drip moulding, see Fig. 358. To disassemble, use a sharp thin chisel and break open the flanged spot welded seams or drill through the center of the spot welds and break open the seam, starting at the beginning of the flat weld cut along the inside of this seam.

At the rear end of the roof panel cut along the edge of the reinforcement in the rear compartment opening from the upper right corner to the upper left corner. This cut should be made in the angle along the flange.

CAUTION: Do not disturb the weld between the flange of the old panel and the rear compartment opening frame.

A new roof panel can be installed after the opening just cut has been straightened; rough spots ground off and the new roof panel trimmed at the rear end to fit the cut made at that point.

It is best to center the new panel around the windshield opening first, holding it in place with C clamps, tack welds, and then weld the entire length.

The windshield and rear window openings should be checked for binding and size by using the glass or a flat board cut to size as a template.

FRONT PILLAR TO DASH BRACKET AND TOEBOARD RISER ASSEMBLY consists of -

Body front pillar to dash bracket - Right or Left
Body front pillar to dash bracket body bolt reinforcement
No. 2 body bolt to toeboard riser reinforcement
Toeboard riser, Right or Left
Toeboard riser wiring clip
Toeboard riser to pillar dash bracket rivet

Throttle control pull lever bracket
Throttle control pull lever bracket rivet
Cowl side panel fender reinforcement, Right or Left

The Model 10 Body front pillar to dash bracket and toeboard riser assembly is the same as above, except that it uses different cowl side panel fender reinforcements.

COWL SIDE PANEL FENDER REINFORCEMENT is welded at the front of the cowl panel, at the rear of the cowl panel, at the front to pillar to dash brace, at the rear to pillar to dash brace, at the top to the cowl panel.

BODY HEADER ASSEMBLY is welded to the front pillar at (5), Fig. 361. It is welded and riveted to the lock pillar at (6), welded and riveted to the rear pillar at (7) and to the quarter panel at (8).

The assembly consists of -
Body header, Right or Left
Body header to front pillar reinforcement
Body header assist strap bracket assembly

COWL VENTILATOR AIR DUCT is an assembly consisting of -

Cowl ventilator air duct front panel with drain pipe
Cowl ventilator air duct side panels, Right and Left, with clinch nut
Cowl ventilator air duct rear panel with the W/S cleaner motor support brackets Right and Left
Cowl ventilator air duct baffle with hood assembly
Cowl ventilator air duct insulator

The sides, front and rear panel of the air duct are welded together and to the body front end panel at the cowl vent opening.

The air duct baffle hood is welded to the baffle and the assembly is welded to the air duct front, rear and side panels.

The air duct baffle with hood is welded to the front, rear and side panels.

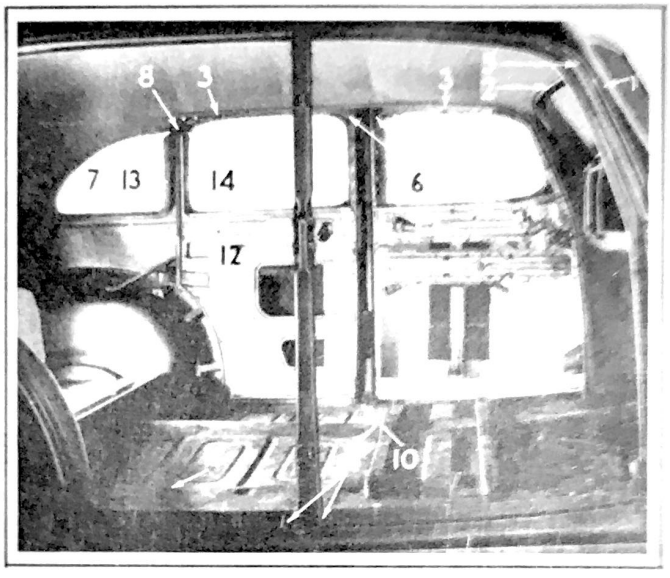

Figure 361
Four Door Sedan - Inside View

PILLARS. The lock pillar is welded to the underbody panel at (9), Fig. 361, and is riveted to the underbody panel at (10). On two door sedan and coupe models the lock pillar is welded to the quarter panel.

The rear pillar is welded to the underbody panel at (11), Fig. 361, to the wheelhouse at (12), to the quarter panel at (13) and to body header (14).

The front door lock pillar assembly is different on each of the coach, sedan and coupe bodies. It consists of -

Front door lock pillar
Front door lock pillar to panel spacer and clinch nut assembly
Front door lock pillar to glass run channel bracket assembly.

The rear pillar assembly consists of -
Rear pillar, Right or Left
Rear pillar to body header bracket, Right or Left, and riveted in place
Rear pillar reinforcement, Right or Left

Door lock striker tapping plate
Door lock striker, Right or Left
Door lock striker screw

BODY CENTER PILLAR consists of -

Center pillar
Center pillar reinforcement assy. upper
Center pillar reinforcement assy. lower
Center pillar reinforcement assy. center
Door lock striker tapping plate
Door lock striker assy., Right or Left
Door lock striker screw

and is arc welded at the top to the body header and at the bottom to the splash guard.

QUARTER PANELS on four door sedans are supplied as an assembly only and consist of the following:

Quarter panel, Right or Left
Rear pillar assembly, Right or Left
Rear seat back compartment panel to quarter panel bracket.
Quarter window drain trough, R or L
Quarter panel trim retainer clip
Rear pillar to wheelhouse reinforcement and bracket assembly.
Quarter panel wiring clip
Quarter window front corner plate upper, Right or Left.
Quarter window front cornerplate, R or L.
Quaeter panel protector panel nut cage
Quarter panel trim retainer clip
Quarter panel to compartment panel bracket, Right or Left.
Quarter panel trim protector panel clip with rivet.
Quarter window rear corner plate, R or L.

Its removal and replacement by cutting along weld lines and rewelding is as follows:

The quarter panel is joined to the roof panel by a flange joint (5), Fig. , along the body line, which is a continuation of the drip moulding joint and the flange joint ends where the body line blends into the rounded contour at the rear quarter (6) just above the compartment door.

The quarter panel weld at the junction of the panel and rear compartment floor (7), is a flat lap weld which continues to the rear compartment opening. To remove cut along the flat weld from the upper corner of the rear compartment opening where the flange ends just above the compartment lid. Cut from the lower corner of the rear compartment opening to the bottom edge of the side quarter panel (along the weld to the rear lower panel). Cut along the angle at the edge of the flanged recess between the quarter panel and the rear compartment opening to the lower corner of the opening.

ROOF DRIP MOULDING is spot welded to the roof panel all along the roof panel flange and is also spot welded to the body header.

The drip moulding is easily removed by drilling through the spot welds or using a thin sharp chisel to break them loose.

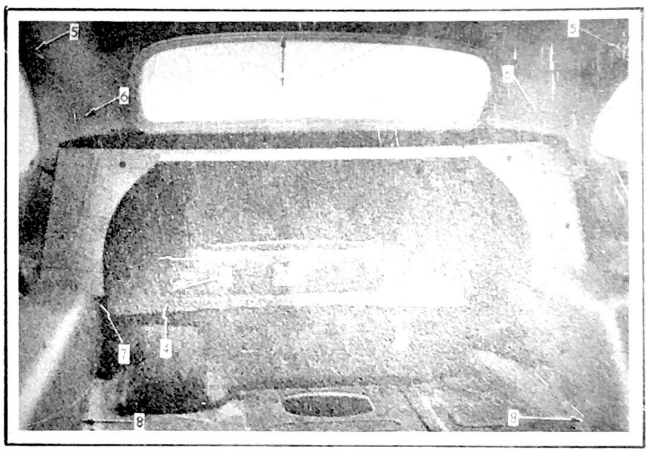

Figure 362
Four Door Sedan - Rear Inside View

UNDERBODY PANEL. The rear seat tray and rear compartment floor is one stamping and is welded to the rear quarter panel at the wheelhouse at (7 and 8), Fig. 362. Break loose all these welds.

The rear pillar is a part of the quarter panel, therefore, cut out the rivets in the top bracket (fastens to body header) and also cut out the rivets in the bottom brackets (fastens to wheelhouse on four door sedans and to the underbody on the

two door sedans and coupes). Leave the brackets in place on the body whenever possible.

The rear quarter panel on two door sedans should be cut along the flange joining the roof panel to the quarter panel. A new panel can be installed after the opening has been straightened, rough spots ground off and the new quarter panel trimmed at the rear end to fit the cut made at that point.

The new panel must be lined up to fit the door and then held in place with C clamps, tack weld and then weld the entire length.

The underbody panel assembly consists of -
Underbody panel
Underbody panel seat reinforcement assembly.
Underbody panel body bolt reinforcement at the front and rear pillars
Underbody panel extensions
Center pillar to underbody bracket and reinforcement assembly
Rear pillar to underbody bracket and reinforcement assembly

BODY LOWER REAR PANEL is welded at the ends to the extreme lower rear ends of the quarter panels below the rear compartment door. The top edge is welded to the rear compartment opening frame and at the lower edge to the underbody rear seat tray extension.

INSTRUMENT PANEL is spot welded to the front end panel, and welded and riveted to the front body pillar reinforcement.

To remove old panel drill out spot welds and cut off rivets with a thin sharp cold chisel.

When installing new panel, take proper precautions to prevent heat from welding, burning graining on panel and finish on cowl.

BODY SEALING. All joints between underbody panel and body side panels are sealed with a plastic compound to prevent entrance of water, drafts and dust. This compound remains flexible and does not completely harden in service.

When checking dust, water or draft complaints these points should be carefully examined and additional compound applied.

BODY OUTSIDE MOULDINGS snap onto retainers, which are held to the body by screws.

If the moulding retainers are removed, the holes in the body for the retainer screws should be sealed to prevent any possibility of water leaks.

COWL VENTILATOR DUST FILTER KIT consists of the cowl ventilator dust filter with the necessary clips to attach the dust filter to the cowl ventilator screen.

DOOR OPENING UPPER WEATHERSTRIP is cemented in place. Use FS-621 cement.

Coach and coupe is 53 1/8" long
5 Pass. Sedan is 75 1/8" long
7 Pass. Sedan is 82 3/4" long
Cab and cab pickup is 46 1/4" long

WINDSHIELD on all models are of the two piece type. The individual pieces are held in a moulded weatherstrip cemented in the body opening.

All models, except Traveler and Commercial cars have stainless steel reveal mouldings cemented in place between the body flange and glass weatherstrip.

WINDSHIELD WIPERS. Double windshield wiper blades are standard equipment on all models. The combination vacuum and fuel pump is optional equipment on all models. The vacuum part of this combination pump acts as a booster to provide additional vacuum when the intake manifold vacuum becomes inadequate to keep the wiper blades working at an efficient speed.

The transmission and cap assemblies and motors are the same on all models, while the wiper blades and link arms differ on the convertible from the closed body models.

The windshield wiper motors are retained by two machine screws and a bracket welded to the underside of the cowl. The wiper blades to motor connecting links are a snap fit to the wiper motor arms.

The wiper arm transmission and caps are retained to the cowl by a "U" shaped bracket on the underside of the cowl. A gasket under the transmission cap prevents water seeping into the body.

WINDSHIELD WIPER MOTOR REMOVAL requires the taking out of the radio grille (fastened to the instrument panel by screws accessible from underneath the panel) and if the car is equipped with a radio it will have to be removed.

Release the coil spring and clips that retain the connecting links to the wiper shaft arms at the motor.

Disconnect the vacuum lines at the motor.

Remove the screws holding the motor to the bracket and remove motor.

WINDSHIELD WIPER MOTOR INSTALLATION. Attach the wiper motor to the bracket at the underside of the cowl.

One end of the bracket is slotted for the easy removal and installation of the motor.

Connect the vacuum line.

Set the top end of wiper motor shaft arm to the extreme right. This is the parked position of the motor.

Attach the wiper connecting links to the motor. The right connecting link attaches to the top arm of the wiper motor.

WINDSHIELD WIPER TRANSMISSION CAP REMOVAL. Remove the wiper arm and blade assembly.

Disconnect the wiper connecting link at the motor shaft arm.

Remove the nut and bracket from the transmission cap stud underneath the cowl and remove the cap and link assembly.

WINDSHIELD WIPER TRANSMISSION DRIVE CHAIN ADJUSTMENT is by loosening the nut at the lower edge of the transmission assembly.

Loosen the nut and move the lower end of the chain up to loosen and down to tighten. Tighten the nut securely.

When replacing the wiper cap and connecting link be certain that the rubber gasket is properly sealed, both at the cap and at the cowl panel.

WINDSHIELD GLASS REMOVEL - Model Traveler and Commercial.

Remove the rear view mirror.

Remove screws in the upper and lower finish mouldings including the center mouldings and remove the mouldings.

Remove the outside center bar. This is held on by the same screws that hold on the inside center finish moulding.

Pry the outer rubber lip up around the entire glass, breaking the cement seal.

Remove the glass from the inside, The rubber weatherstrip is cemented to the body and the glass and it may be necessary to work the rubber loose with a knife to free it from the body.

Remove the rubber from the glass.

WINDSHIELD GLASS REMOVAL - All Models except Model Traveler and Commercial.

Remove the rear view mirror.

Remove the screws in the upper and lower finish mouldings, including the center moulding and remove the mouldings.

Remove the outside center bar. This is held on by the same screws that hold the inside center finish moulding.

Remove the glass from the inside. The rubber weatherstrip is cemented to the body and the glass and it may be necessary to work the rubber loose with a knife to free it from the body.

It is not necessary to remove the stainless steel reveal moulding.

WINDSHIELD GLASS INSTALLING. Check the windshield opening flange with a straight edge to be certain that the glass will not be sprung when it is put in place against this flange. Straighten if necessary.

Apply a coating of FS-621 windshield sealer, available through Hinckley-Myers Company, to the glass groove in the rubber and at the same time apply a coating to the inner face of the windshield body opening flange. Allow the cement to dry to the point where it becomes very sticky.

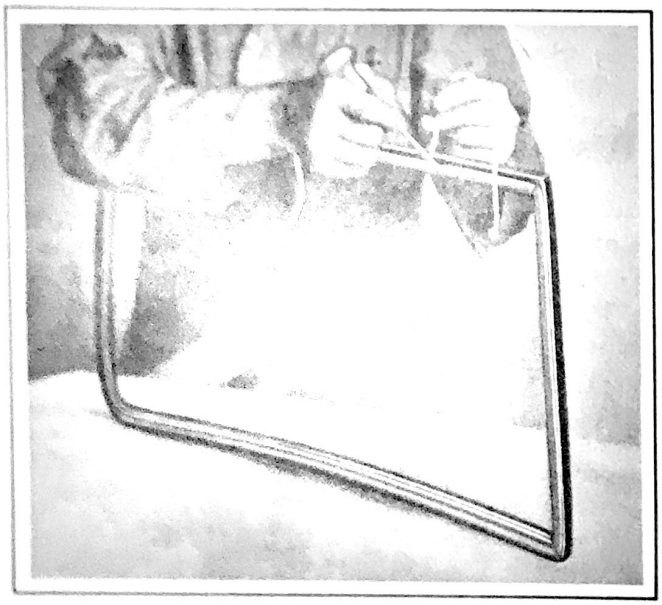

Figure 363
Installing Windshield Glass Weatherstrip

Insert the edge of the glass which goes to the center, into its groove in the rubber weatherstrip, and work the glass down into its place in the weatherstrip.

Working from the center toward the outer end, put the remainder of the weatherstrip on the glass.

Place a piece of strong twine, about 60" long, see Fig. 363, in the outside moulding groove, bringing the ends together at the top and allow them to hang down on the outside of the glass.

Hold the glass firmly in position on the inside of the windshield opening and pull the ends of the twine apart, bringing the lip of the weatherstrip over the flange of the opening.

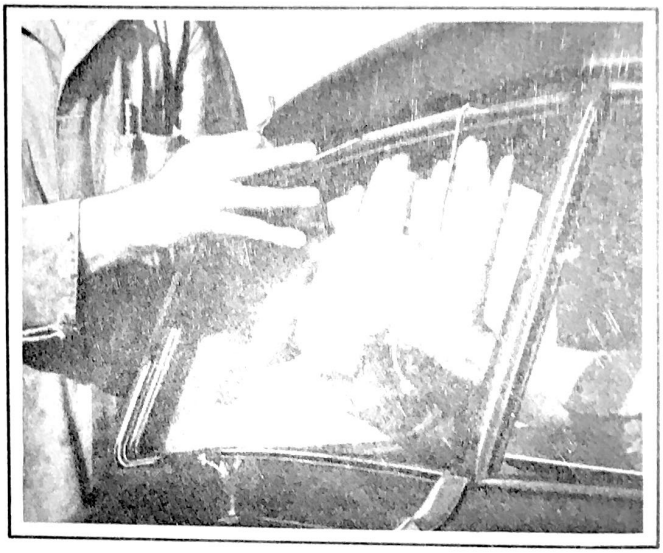

Figure 364 - Installing Windshield Glass

Cement the outside lip of the weatherstrip to the flange by putting the nozzle of a tube of FS-621 windshield sealer under the flange and depositing the cement all around the opening.

A force feed gun B-182, available through Hinckley-Myers Company, can be used to deposit a small bead of cement around the weatherstrip flange.

Fill the center finish bar screw holes with FS-621 cement or Plastikon putty and

install the inside and outside finish mouldings. It is very important that this center bar be sealed tight to prevent water leaks at this point.

Install the inside finish mouldings and rear view mirror.

WINDSHIELD REVEAL FINISH MOULDING. The stainless steel mouldings around the outer edge of the windshield used on all models except model Traveler, is cemented to the windshield opening under the rubber weatherstrip.

It is necessary to remove the windshield glass to remove or replace these mouldings.

REAR QUARTER WINDOW - SOLID TYPE

TO REMOVE:

Release rubber lip at outside - using a screw driver or another blunt instrument - breaking loose cement seal.

Insert two screw drivers behind rubber weatherstrip at top of seal, catching screw driver under flange of window opening.

Pry down on screw driver and with rubber hammer tap out window.

TO INSTALL:

Clean cement from window opening flange.

Place coat of cement around window opening flange.

Apply a coating of sealer FS-621 in glass groove in weatherstrip.

Place a piece of strong twine around weatherstrip in groove of outer lip.

From inside of body press glass into place.

Hold in place and pull twine apart, pulling lip of rubber moulding over flange of window opening.

With rubber hammer, lightly tap around edge from outside to securely seat glass.

REAR WINDOW GLASS - SEDANS

TO REMOVE:

Working from inside the car, loosen the weatherstrip (with a knife) all around the body opening, pressing the glass outward as the weatherstrip is being loosened. The stainless steel reveal moulding is used on all models except 10 Traveler and is in two "U" shaped pieces joined at the center by sliding clips. The mouldings have clips integral with them that are bent around the weatherstrip.

Disassemble the glass, weatherstrip, and moulding. Be careful not to scratch glass.

Clean off the old cement from body flange.

Check flange for straightness.

TO INSTALL:

Apply a coating of Windshield Sealer FS-621 with Force Feed Gun B-182, both available through Hinckley-Myers Company, or use a tube of sealer with a nozzle, in the groove of the weatherstrip where the glass sets in.

Deposit a small amount of sealer on flange of body opening.

Install weatherstrip on glass.

Where reveal moulding is used, slide clips over one end of moulding and slide both halves of moulding on weatherstrip, driving them into place with a rubber hammer. Slide clips over ends of mouldings and bend clips over weatherstrip.

Put a piece of twine 60" long in groove of the weatherstrip that fits over body flange and bring ends of twine together and allow them to hang down on the inside of the glass.

Working from outside of car, push the top of the glass and weatherstrip through the top of the opening. Press the glass and weatherstrip firmly into the opening and pull the loose ends of the twine from the inside. The twine will pull the inside lip of the weatherstrip into the body and over the edge of the body opening.

Deposit a small bead of cement all around the outside edge of the reveal moulding. Be careful not to use too much sealer as it may soil the headlining. To clean off sealer use cleaners naptha and a soft sponge.

SEALING REAR WINDOWS. For water leaks between glass weatherstrip and glass, separate weatherstrip from glass and apply Windshield Sealer FS-621 with Feed Gun B-182, both of which are available through Hinckley-Myers Company, Jackson, Michigan. Be careful not to scratch glass and apply only sufficient cement to effect a good seal.

For water leaks between weatherstrip and body flange, carefully lift chromium plated moulding off rubber weatherstrip and apply Windshield Sealer FS-621 under chromium moulding, using Feed Fun B-182.

Excess cement can be cleaned off with cleaners naptha. Test with a water hose.

DOOR STRAIGHTENING. A properly hung door should set so that the door closes easily and completely at the top and bottom.

The door striker should be set as given on Page 307 and the door bumpers adjusted.

A door that closes at the top but not at the bottom should be sprung by placing a block of wood between the door and body at the top and pressing against the lower part of the door with the knee.

A door that closes at the bottom but not at the top, can be adjusted by reversing the above procedure. Block the bottom of the door from the inside and push the top of the door toward its closed position.

Hudson all steel welded doors are a single unit and can be sprung without danger of loosening joints.

The Door Straightener Tool U-10 will fit any size or shape of door and can be moved up and down between the channel uprights and then locked at the exact point where pressure is desired.

DOOR ALIGNMENT. A properly hung door should set so that the door closes easily and completely at the top and the bottom.

The door striker should be set as outlined on Page 307 and the door bumpers adjusted.

The front door has an exterior type lower hinge that is riveted to the front pillar and also to the door.

The front door upper and rear door hinges are of the concealed type and the screw holes in the door are elongated, permitting adjustment in and out and up and down in the body opening.

The concealed hinges are attached to the body hinge pillars and doors by 5/16" - 24 x 3/4" Special Oval Head Cross Recess combination screws and in the door fasten to a floating tapping plate on the inside of the door. The tapping plate in the hinge pillar does not float as the holes in the pillar are not oversize.

The fit of the door can be checked by opening the door and with a piece of soft chalk, mark every six inches the outer edge of the body panels across the top of the door, the outer face of the body lock pillar, the outer face of the underbody panel and the corner of the body hinge pillar.

Close the door to its full latched position without slamming so that the door and weatherstrip will contact the chalk lines on the body panels.

Open the door and note the chalk contact or lack of contact the weatherstrip on the door has made with the body panels.

The portion of the door not having chalk must be brought closer to the body.

A front door that closes at the top but not at the bottom should be sprung by placing a block of wood between the door and the body at the top and pressing against the lower part of the door with the knee. This will spring the lower external type hinge which is not adjustable. A rear door is adjustable by loosening the hinge screws in the door.

A front or rear door that closes at the bottom but not at the top can be adjusted by loosening the hinge screws in the door and moving the upper part of the door inward.

A front door that sets too close to the hinge pillar and leaves a wide gap at the door lock pillar can be adjusted by placing a hammer between the pillar and the door at the lower hinge. Close the door on the hammer and spread the hinge. The upper hinge can be loosened on the door half and the door moved to close the gap.

A front or rear door that has the lock edge too high can be adjusted by loosening the hinge screws in the door and moving the upper part of the door.

A front door that has the lock edge too low can be aligned by spreading the lower hinge and if the condition is on a rear door, by loosening the hinge screws in the door and moving the lower part of the door.

A front door that sets too close to the lock pillar can be aligned by springing the body half of the lower hinge with a fiber block and hammer and moving the door at the upper hinge by loosening the door half of the hinge.

DOOR HINGE PINS AND BUSHINGS. A special hinge pin removing tool B 170, can be used for the front door lower hinge which is of the exterior type. The concealed hinges have to be removed to drive out the hinge pin.

The door half of the concealed hinges are bushed with two bronze oilless bushings and worn bushings may be replaced and reamed to fit a standard size hinge pin. To replace concealed hinge bushings it is necessary to remove the hinge from the door and pillar.

The hinge pin and bushings do not require lubrication as the bronze bushings are of special oilless construction. The concealed hinges are attached to the body hinge pillars by 5/16" - 14 x 3/4" special oval head cross recess combination screws and are attached to a floating tapping plate on the inside of the door.

DOOR STRIKER AND BUMPER. The cushion action door striker used on HUDSON cars represents a new development in door lock design and is radically different in operation from the type heretofore employed in our cars. The features incorporated in the construction of this new striker permit of easy, quiet closing of the door with a light pressure and when the door and striker ARE PROPERLY ADJUSTED the door will remain securely closed.

DOOR STRIKER OPERATION. In the new lock the bolt (D), Fig. 365, remains stationary (in the extended position) when the door is closed instead of being moved into the lock by the action of its beveled edge against the striker plate as formerly. This is accomplished by the use of two pawls or latches which are pivoted in the upper and lower parts of the door striker assembly as shown in (A) and (B), Fig. 365, and held outward by spring pressure. The lower pawl (B) which is located closer to the outside of the car, acts as a safety catch similar to the first position on the old type striker plate. The upper pawl (A) is located toward the inside of the car and its wedging action against the bevel on bolt serves to keep the door tightly closed. In Fig. 365, the bolt is shown in three positions, at (C) with the door open, at (D) with the door partly closed and bolt in the safety position and at (E) with the door

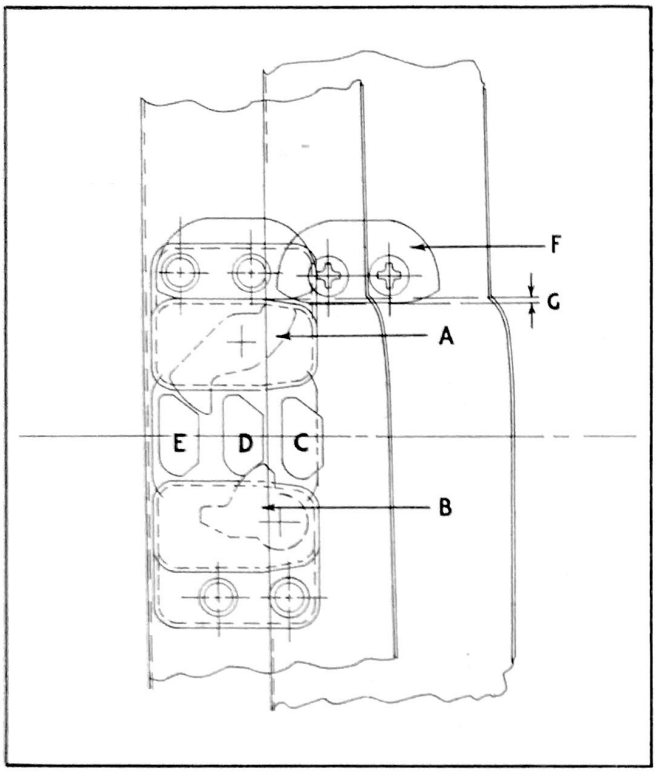

Figure 365 - Door Striker Operation

entirely closed and bolt locked by the wedging action of the upper pawl.

DOOR STRIKER ALSO ACTS AS DOVETAIL. The complete striker assembly, as a unit, is attached to the pillar post by means of four screws (B), Fig. 366, which enter into tapping plates, permitting of a considerable range of adjustment both up and down and sideways. In addition to housing the pawls or latches which control the closing of the door, the striker assembly also acts as one member of the dovetail since it carries the weight of the door through the dovetail (F), Fig. 365, which is securely fastened to the door and is not adjustable. When properly adjusted the upper face of the striker will be approximately 1/32" above the bottom face of the dovetail with the door just open, which means that the door will be raised by that amount when closed. This is shown at (G). The wedging action of the upper pawl (A) against the bevel on the bolt provides an automatic take-up and effectually prevents up and down movement of the door and hammering of the dovetail on the striker.

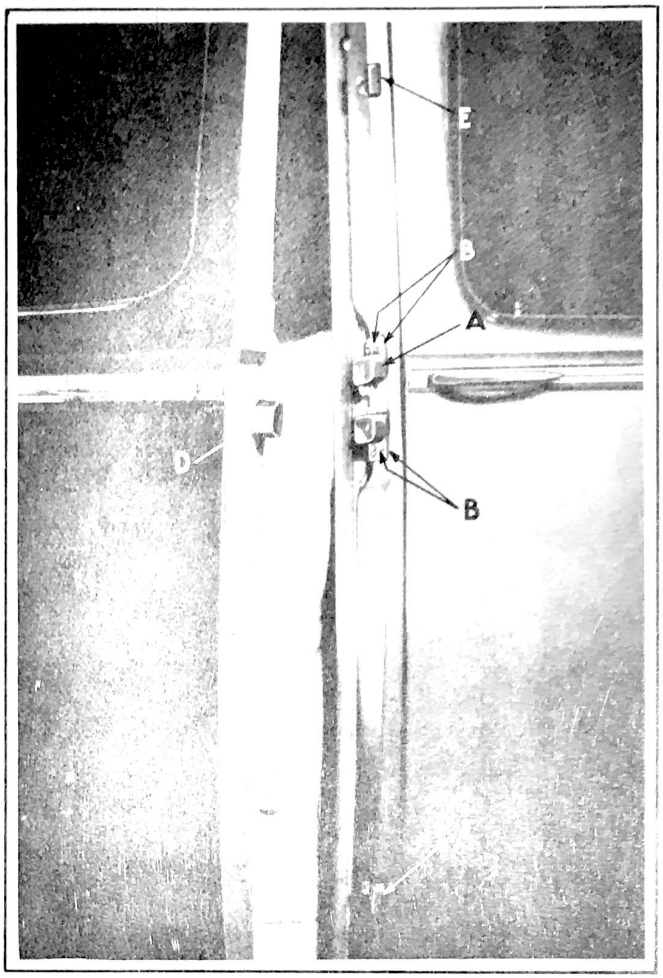

Figure 366 - Door Striker Operation

DOOR STRIKER ADJUSTMENT INSTRUCTIONS. Set door rubber bumpers (E), Fig. 366, all the way in.

Adjust the striker assembly (A) on the pillar, in as far as it will go, and still permit the door to close and latch very easily.

When making above adjustment, be sure that the striker assembly (C) is set at such a height that the dovetail on the door will interfere by about 1/32". This will result in the door being lifted this amount as it is closed.

Also make sure that the striker assembly is not cocked but is square with the inside edge of the pillar.

After making the above adjustment see if the rubber door bumpers (E) touch the edge of the door flange. If not, set them

out until they both touch the flange and exert a slight pressure on the door when closed. The door should still close and latch very easily.

To assure doors being properly closed, the striker pawls must pivot freely within the case. If oiling does not produce satisfactory results, install a new striker assembly.

The second cautionary measure is to be sure that doors are not adjusted so that

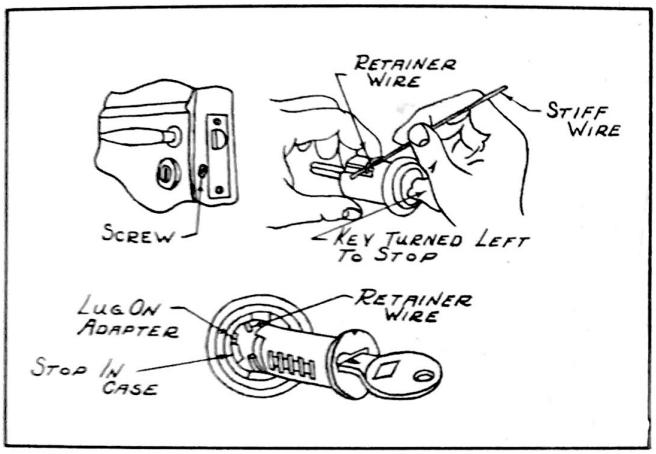

Figure 367 - Door Safety Lock Details

they have to be slammed hard in order to be latched. In this case it is not possible for the upper pawl to catch on the edge of the bolt and seat properly, as shown in Fig. 365.

DOOR CYLINDER LOCK REMOVAL. Loosen the set screw in the edge of the door (see Fig. 367).

With a stiff wire pry up the retainer wire and turn the key to the left to stop and pull the cylinder out of the case.

Release the wire retainer.

IGNITION LOCK CYLINDER. To remove and replace see "Electrical Section".

BLANK LOCK CYLINDER. For doors and ignition locks.

The coding is done by placing a key in the cylinder and cutting off the tumblers flush with the outside of the cylinder while the key is in place. This can be done with a file and a suitable fixture.

The fixture is made from a piece of brass tubing two inches long with an inside diameter of 1/2" and 1/16" wall thickness. Cut a slot the entire length of the tube 3/8" wide and taper the edges with a file. Now file another slot directly opposite the first 3/16" wide and 3/4" long.

To cut the tumblers, place the key in the cylinder. Then place the cylinder in the end of the fixture having the short slot. The cut edge of the key blade must be toward the long slot in the fixture for the first filing operation.

Place the fixture in a vise with the long slot up and file the tumblers flush with the contour of the cylinder. Do not cut too deep as this will make it impossible to cut the other end of the tumblers deep enough.

Remove the cylinder and place it in the opposite end of the fixture with the other end of the tumblers protruding through the long slot. File these flush with the contour of the cylinder. Check for burrs on the ends of the tumblers and make sure the tumblers work freely.

To reinstall a cylinder in an ignition lock, insert the key in the cylinder and the cylinder in the housing and turn in the direction of locking.

The key change symbol is stamped on the lock cylinder case and indicates the key series.

Key Cutter J 775 and Code Finder J 776 are recommended for making replacement keys.

LOCKER BOX LOCK (IN DASH) REMOVAL.

Remove screws and cups holding the lock. Hold lock as shown in Fig. 368. Lift

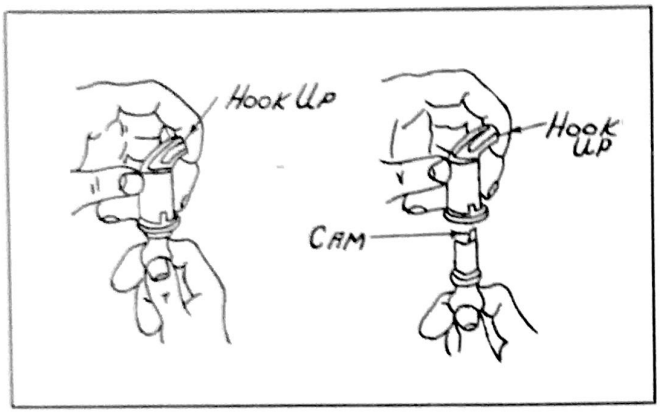

Figure 368 - Locker Box Lock Details

up the hook and turn the key to the right. Pull out the cylinder.

TO REPLACE:

Hold the lock in the same manner as shown in Fig. 368. With the key in the cylinder, line up the cam with the front of the hook.

Insert the cylinder and turn to the left until the stop is reached.

TRUNK AND REAR COMPARTMENT LOCK REMOVAL.

Open the trunk or rear compartment door. Remove the screws holding the shield, see Fig. 369. Take out the cotter pin and washer to release the link.

Take out screw holding the lock bolt and pull out the cylinder, being careful not to lose the spring washer.

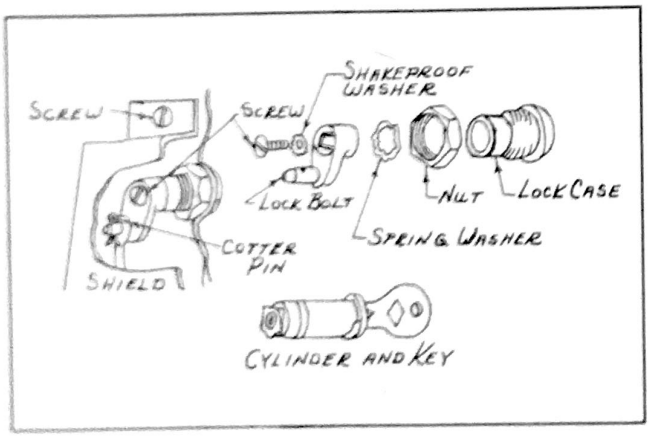

Figure 369
Rear Compartment Lock Details

The large nut holds the case in the trunk lid.

To replace the trunk or rear compartment lock, assemble the parts as shown in Fig. 369.

FINISH MOULDINGS - WINDSHIELD AND WINDOW are attached by means of Phillips head screws passing through the mouldings and into holes in the windshield opening and door frames. Use Phillips Screw Driver B-206 to remove these screws.

DOOR WINDOW FINISH MOULDING VALANCE ORNAMENT used on Coupe and Brougham are fastened by clips that are a part of the ornament.

DOOR CHECKS on all series bodies incorporate a hold open feature and consist of the door check with a pivot bracket on the pillar. The check arm is connected to the bracket by a clevis pin.

DOOR OUTSIDE HANDLE is held by two screws, one of which is under the chromed door moulding and the other is inside the door.

To replace a door handle, remove the chromed door moulding (snaps onto a retainer), the inside door valance, and loosen the door trim panel at the top.

INSIDE HANDLES, door lock, window regulator and crank type wing handles are held in place by straight pins passing through the handles and shafts.

To remove the handles, press inward on the escutcheon plate to expose the pin and with a sharp instrument, push out the pin.

UPHOLSTERED TRIM PANELS AND WINDLACE on door and quarter panel trim panels and windlace assemblies are attached by means of sheet metal screws passing through the door and pillars and into steel clips riveted to the trim panel foundation. The clips pass through slots cut in the door frames and pillars.

The door trim panel is fastened by clips to the door valance. It is not necessary to remove the valance to get at the door hardware. Remove sheet metal screws in the edge of the door and unsnap the clips holding the door tim panel to the valance.

DOOR WING - FRICTION TYPE - REMOVAL.

Remove inside door lock handle and regulator handle.

Remove valance and garnish moulding.

Remove door trim panel and regulator handle spring.

Loosen door wing screws inside of door (A). Fig. 370

Open wing and press down to release from pivot at top.

Pull wing outward and upward and remove.

To install, reverse procedure of removal.

WING WEATHERSTRIP RETAINER ASSEMBLY REMOVAL.

Remove inside door handle and regulator handle.

Remove garnish moulding.

Remove door trim panel and valance and regulator handle spring.

Remove screw (Q), Fig. 370, at top of door.

Remove screws (B) and (C).

Bend open felt channel clip (D) at top of door.

Remove felt channel.

Remove screws (E) and remove wing clamp.

Loosen screws (A).

Tilt wing and retainer assembly toward outer edge of door and lift out.

TO REPLACE:

CAUTION: When replacing new assembly be careful not to bend channel.

Install wing and retainer assembly and secure with screw at (Q).

Install channel and reclip at (D).

Install screws (B) and (C).

Install wing clamp and secure with screws (E).



Figure 370 - Front Door

A. Door wing clamp bolt.
B. Wing center bar glass run screw.
C. Wing center bar glass run screw.
D. Wing center bar glass run clip.
E. Wing clamp to cross member bolt.
F. Remote control screws.
G. Remote control to door lock connection.
H. Door lock screws.
J. Window regulator track screw.
K. Window regulator track screw.
L. Window roller guide to door glass channel screw.
M. Door window regulator screws.
N. Window roller guide.
O. Window regulator track.
P. Door window regulator arm.
Q. Wing retainer screw.
R. Wing center bar glass run.
S. Door window glass run clip.
T. Door window glass run.

Tighten screws (A).

Install regulator handle spring and trim panel.

Install garnish moulding, valance and trim panel.

Install inside door lock handle and regulator handle.

FRONT DOOR WINDOW REGULATOR REMOVAL - All Models except 10 Traveler and Commercial.

Remove inside door lock handle and regulator handle.

Remove door trim pad from valance (clipped on).

Remove trim panel and regulator spring.

Remove screws (J), (K), and (L), Fig. 370, and remove regulator track (0) and window roller guide (N).

Remove screws (M and C) and remove regulator.

TO INSTALL:

Install regulator and secure with screw (M and C).

Install regulator track (O) and roller guide (N), connecting regulator arm to roller guide.

Install screws (J), (K) and (L).

Install regulator handle spring and trim panel.

Install garnish moulding and valance.

Install inside door lock handle and regulator handle.

FRONT DOOR GLASS REMOVING - All Models except 10 Traveler and Commerical.

Remove inside door lock handle and window regulator handle.

Remove door window garnish moulding.

Remove door trim panel and balance and window regulator handle springs.

Remove screws (J), (K) and (L), Fig. 370, and remove window regulator track (O) and window roller guide (N).

Remove window regulator arm (P).

Loosen screws (B) and (C) and remove window by lowering.

DOOR WING GLASS REMOVING AND REPLACING. The old glass may be removed by inserting gasoline on both sides of the filler seal in order to soften it.

Remove the old glass and thoroughly clean the channel with sandpaper. Remove all rust.

Use Everseal glass channel filler in either 1/32", 1/16" or 3/32" thickness depending upon the glass thickness. Cut this filler about two inches longer than is necessary and pinch the ends together with the fingers so as to hold the ends while the glass is being pushed into the frame.

The glass can be installed without special tools if the proper thickness of filler is used.

Apply a coat of S.A.E. 10 engine oil to the inside of the wing channel. This will enable the material to slide freely into the channel.

Push the glass with the filler into the channel until it is firmly seated.

The oil softens the filler and causes the rubber to swell making a tight water-seal.

Trim off the excess filler material.

It requires 24 hours for the oil to make the rubber filler swell so water leak tests should be made after that time.

FRONT DOOR GLASS REPLACING.

Replace window glass in the glass run channel (R).

Tighten screws (B) and (C), Fig. 370.

Lower the regulator arm (P).

Replace window regulator track (O) and window roller guide (N), connecting the regulator arm (P) to the roller guide (N) and fasten with screws (J), (K) and (L).

Replace trim panel and valance, garnish moulding, regulator handle springs, inside lock handle and regulator handle.

FRONT DOOR REMOTE CONTROL - All Models.

TO REMOVE:

Remove inside door lock handle and regulator handle.

Remove door trim pad from valance (clipped on).

Remove door trim panel and regulator handle spring.

Remove remote control screws (F), Fig. 370.

Raise lever up and remove from lock at (G).

TO REPLACE:

Place remote control lever over door lock at (G).

Place remote control in position and install screws (F).

Replace regulator handle spring and install door trim panel.

Install door valance.

Install inside door lock handle and regulator handle.

FRONT DOOR LOCK REMOVAL.

Remove inside door lock handle and regulator handle.

Remove door trim pad from valance (clipped on).

Remove trim panel and regulator handle spring.

On right hand front door only remove set screw at door edge and remove safety lock cylinder.

Remove outside door handle.

Remove door dovetail.

Remove remote control assembly.

Remove screws (H), Fig. 370.

Remove lower channel retaining screw (S), see Fig. 370, located inside door frame.

Remove door lock by dropping down.

TO INSTALL:

Replace door lock in position.

Install screws (H).

Install lower channel retaining screw (S).

Install remote control.

Install door dovetail.

Install outside door lock handle.

Install safety lock cylinder and replace set screw.

Install regulator handle spring and trim panel.

Install door trim pad on valance.

Install inside door lock handle and regulator handle.

DOOR WING REMOVAL - CRANK TYPE.

Remove inside door lock handle and regulator handle.

Remove door valance and garnish moulding.

Remove door trim panel and regulator handle spring.

Remove screws (B), Fig. 370.

Open wing and press down to release from pivot at top.

Pull wing outward and upward and remove.

To install reverse procedure of removal.

DOOR WING AND REGULATOR REMOVAL - CRANK TYPE.

Remove inside door lock handle and window regulator handle.

Remove door valance and garnish moulding.

Remove door trim panel and remove window regulator handle spring.

Remove two screws (A), Fig. 370, attaching regulator to door panel.

Remove regulator (B), and wing assembly. To reinstall reverse procedure of removal.

REAR DOOR WINDOW REGULATOR REMOVAL.

Remove inside door lock handle and window regulator handle.

Remove door trim pad from valance (clipped on).

Remove door trim panel and window regulator handle spring.

Lower the window glass.

Remove screws (A), Fig. 371.

Release regulator arm (S) from lower glass run channel (T) at (C).

TO REPLACE:

Install regulator installing arm (S) in channel (T).

Install four regulator screws and washer (A).

Replace regulator handle spring and install trim panel.

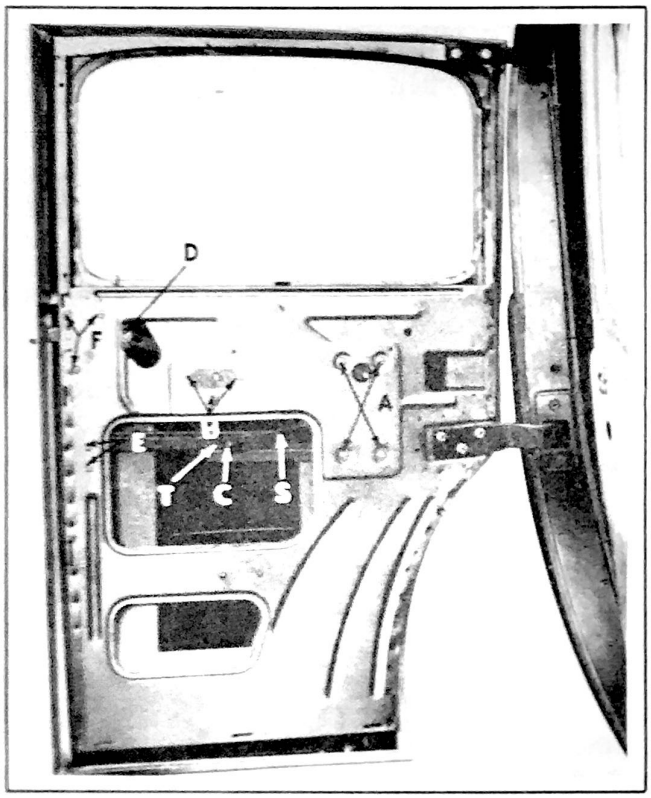

Figure 371 - Rear Door

A. Window regulator screws.
B. Remote control screws.
C. Window regulator arm to glass rest channel connection.
D. Remote control to door lock connection.
E. Glass run screws.
F. Door lock screws.
S. Window regulator arm.
T. Glass rest channel.

Install door valance.

Replace inside door lock handle and window regulator handle.

REAR DOOR GLASS REMOVING.

Remove inside door lock handle and window regulator handle.

Remove door window garnish moulding.

Remove door trim panel, valance and window regulator.handle springs.

Lower the window pull in at the top and raise so as to free the window glass from the channels.

Raise the window as far as possible.

Use a screw driver and pry the regulator arm (S) out of the lower glass run channel (T, Fig. 371).

REAR DOOR LOCK REMOTE CONTROL REPLACING.

Remove inside door lock handles and regulator handles.

Remove door trim panel door valance, and regulator handle spring.

Remove screws and nuts (B), Fig. 371.

Disconnect remote control from door lock at (D) and remove remote control.

TO REPLACE:

Place remote control on door lock at (D).
Install screws and nuts (B).
Replace regulator handle spring.
Install door valance and trim panel.
Install inside door lock handle and regulator handle.

REAR DOOR LOCK REMOVAL.

Remove inside door lock handle and regulator handle.

Remove trim panel door valance and regulator spring.

Remove outside door lock handle.
Remove remote control.
Remove door dovetail.
Remove screws and nuts (E), Fig. 371.
Remove screws (F).
Remove door lock.

TO INSTALL:

Install door lock and replace screws (F).
Install screws and nuts (E).
Install remote control.
Install door dovetail.
Install outside handle.
Install regulator handle spring.
Install door valance and trim panel.
Install inside door lock handle and regulator handle.

FRONT DOOR WINDOW REGULATOR REMOVAL - SLIDING TYPE FIGURE.372.

Remove inside door handle and regulator handle.

Remove trim panel and regulator handle spring.

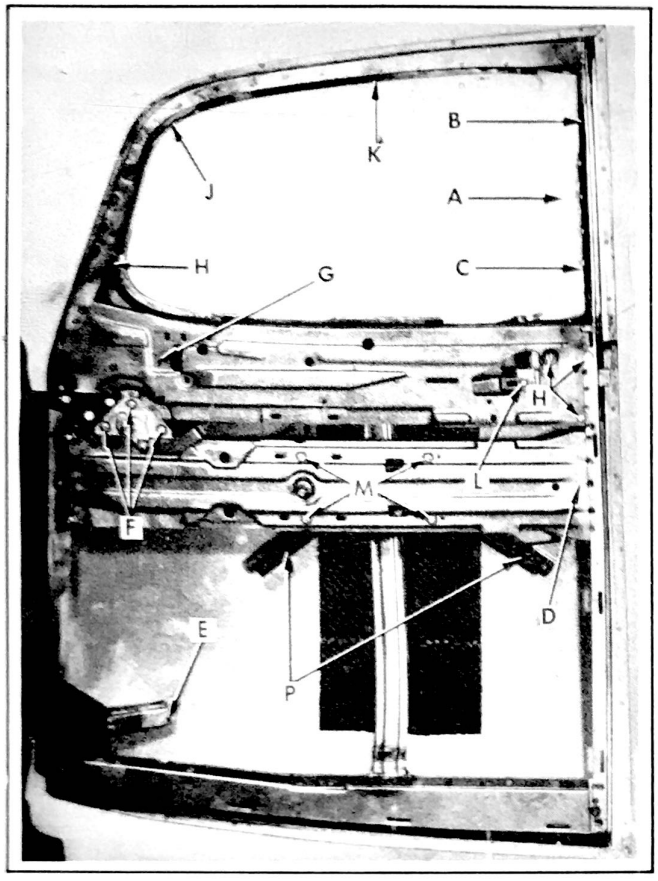

Figure 372 - Front Door Model 10 Traveler, Com'l., and 18

A. Glass run shield.
B. Glass run shield screw.
C. Glass run shield screw.
D. Glass run to bracket screw.
E. Glass run bracket.
F. Remote control screws.
G. Glass run screw.
H. Door lock screw.
J. Glass run nail.
K. Glass run nail.
L. Remote control to door lock connection.
M. Window regulator.
P. Window regulator arms.

Remove four screws (Fig. 372) attaching regulator to door panel brace.

Raise window and remove regulator from door brace.

Lower window and slide arms out of window channel track

TO INSTALL:

Place regulator arms in window channel track.

Raise window and assemble regulator to door brace with four screws. (Fig. 372).

Replace regulator handle spring.

Install garnish moulding.

Install inside door handle and regulator handle.

FRONT DOOR WINDOW REMOVAL - SLIDING TYPE.

Proceed as outlined in operations 1 through 6 inclusive under "Replacing Front Door Window Regulator - Sliding Type."

Remove screw attaching glass run channel to brace at front edge.

Lower window and tilt inward to remove.

TO INSTALL:

Place window in glass run channel.

Install screw securing glass run channel to door brace.

Proceed as outlined in operations 1 through 5 inclusive under "Replacing Front Door Window Regulator - Sliding Type".

QUARTER WINDOW REGULATOR REMOVAL - TWO DOOR SEDAN.

Remove rear seat cushion and back.

Remove regulator handle.

Remove garnish moulding.

Remove trim panel and regulator handle spring.

Remove two screws from underneath fender attaching arm rest and remove arm rest.

Remove two screws at each end of regulator support.

Lower window and remove regulator arms from window and remove regulator.

TO INSTALL:

Place regulator arms in glass channel tracks.

Install two screws attaching regulator support to window frame.

Install regulator handle spring and trim panel.

Install arm rest and install two screws underneath fender attaching arm rest to wheelhouse.
Install garnish moulding.
Install regulator handle.
Install rear seat back and cushion.

QUARTER WINDOW REMOVAL OF SLIDING TYPE FOUR DOOR SEDAN.

Remove rear seat back retaining screws and remove seat back.
screws and remove seat back.
Remove regulator handle.
Remove garnish moulding.
Remove assist strap.
Remove trim panel retainer screws from door frame.
Remove screws underneath fender attaching arm rest and remove arm rest.
Untack trim panel at top and bottom of window frame.
Remove trim panel, first disconnecting cigar lighter.
Untack headlining at top of window frame.
Untack drain through from beneath window.
Remove bolt holding bracket at rear lower edge of frame to rear seat back tray reinforcement.
Remove bolts holding frame assembly and remove assembly towards inside of body and place assembly on bench.

TO REMOVE WINDOW:

Remove drain trough from outside of window frame.
Remove retainer screws holding bottom of glass channel to regulator and remove glass.

TO REMOVE REGULATOR:

Remove screws holding regulator to frame. assembly and remove regulator.

TO INSTALL:

Install regulator on glass channel and secure with two screws.

Install window and attach to regulator with two screws.
Install drain trough to window frame.

Be sure to retrack in same holes.

Place window frame assembly in position from inside and fasten with bolts.
Install bolt retaining rear of frame to seat back tray reinforcement.
Retack headlining to top of window frame.
Place regulator handle spring and trim panel in position and reconnect cigar lighter.
Install trim panel retainer screws.
Retack trim panel at top and bottom of window.
Install arm rest and fasten with two bolts underneath fender.
Install garnish moulding.
Install regulator handle.
Install assist strap.
Install seat back and secure to floor with screws.
Install seat riser and seat cushion.

QUARTER WINDOW REMOVAL - TWO DOOR SEDAN.

Remove regulator handle.
Remove garnish moulding.
Remove trim panel and regulator handle spring.
Remove wood block at rear lower corner of window frame.
Raise window as high as possible and release from channel opening.
Disconnect regulator arms from glass channel tracks and remove window from inside.

TO INSTALL:

Install glass in channel opening.
Raise regulator arms and assemble to glass channel tracks.
Lower window into place.
Install wood block at rear lower corner of glass frame.
Replace regulator handle spring and trim panel.
Install garnish moulding.
Install regulator handle.

QUARTER WINDOW DRAIN TROUGHS. The drain troughs on models using a sliding quarter window are of rubberized sheeting and are tacked to the quarter window frame. The rear end of the trough is closed by folding and tacking to the rear end of the frame. The bottom of the trough slopes to the front and the front end should be placed between the outside quarter panel and door pillar to permit water to drain into a steel trough welded at the front of the wheelhouse.

TOP BOWS. Top bows are attached to brackets on the body header by bolts, nuts, and washers. On two door sedan models the rear top bows are fastened to the rear quarter window frames with screws and nuts.

The top bows support the headlining and act as a support for the top silencing pads which are cemented to the body top panel.

HEADLINING REMOVAL.

Remove dome lamp.
Remove inside visor.
Remove rear view mirror.
Remove windshield finish mouldings.
Untack headlining at windshield header.
Remove body header trim retainer attaching screws from body headers and front pillars.
On all four door sedans except model 10, and all two door sedans remove quarter window finish mouldings and loosen quarter trim panels at top edge. On model 10 four door sedans remove quarter window glass and weatherstrip.
Remove rear window and weatherstrip.
Remove rear seat back tray trim panel.
Lift windlace and headlining and header trim retainers off header flange.
Loosen headlining from cement at window openings.
Loosen top bows on one side only.
Slide headlining off top bows.

TO INSTALL:

Slide headlining onto top bows.
Cement headlining in position in rear window and on quarter window models with solid quarter windows. Also tack headlining to quarter window openings with sheet metal nails. On models with movable quarter windows tack headlining to frame.
Install rear seat back tray trim panel.
Install rear window.
Install quarter windows on model 10 four door sedans. On all other models tack headlining to quarter window frames.
Assemble body header trim retainers in slots in cardboard strips on headlining and windlace and place in position on flange of body headers.
Install body header trim retainer screws in body headers and front pillars.
Tack quarter trim panels into position.
On cars with movable quarter windows install finish mouldings.
Install windshield finish mouldings.
Install rear view mirror.
Install inside visor.
Install dome lamp.

AIR FOAM SEAT CUSHION PAD can be installed on any model not factory equipped with it by removing the cushion trim which is held on by wire ring clips.

The use of an air foam pad necessitates the use of a protector over the cushion spring. The air foam pad is placed on top of this protector and the cloth skirt of the air foam pad is tied with wire "hog rings" completely around the top.

The cushion cover has tabs that fasten to the bottom of the cushion frame with the "hog rings". Fit the cover carefully so that the pleat lines of the cover are in the air foam pad crevices.

NOTE: The air foam pad is optional equipment on the following models.
Model 10 - Traveler, Passenger, DeLuxe, Utility Coupe.
Model 11 - Brougham, Town Sedan, 5 Passenger Sedan, Coupes.
Model 18 - Pass. Town Sedan, 5 Pass. Sedan.
All other models have the air foam pad as standard equipment and it is sewed directly to the cushion cover.

ARM REST on all models can be moved or a new one installed on any door. It is held onto the door trim panel by bolts that are installed from inside and pass through a Masonite reinforcement, then through the trim panel and into the arm rest.

To install an arm rest on a right hand door--

Remove the inside door hardware.
Remove door trim panel.
Lay out the location desired and punch 5/16" holes.
Install Masonite reinforcement bolt head washers, lockwashers and bolts. Fasten the bolts into the arm rest firmly.

Parts necessary to install an arm rest are--

Arm rest assembly--either cloth or leather type.

2 18455 bolts
1 149789 Masonite reinforcement
2 86272 bolt washers
2 18475 bolt lockwashers

The front seat back center arm rest hinge assembly and front seat center arm rest hinge bracket are the same on both the front and rear seats on all 17 Town Sedan and 5 Pass. Sedan.

CARE OF THE CAR INTERIOR. Periodic cleaning of the car interior is as important as the many other maintenance items that should be performed on a motor car.

Dust allowed to accumulate on the upholstery cloth gradually finds its way between the fibres, and its abrasive action will result in early deterioration of the cloth. By vacuum cleaning, or using a whisk broom to clean the cloth, the life can be increased and pleasing appearance retained.

Spots on upholstery cloth can be removed easily by following a few practical suggestions. Avoid the use of gasoline as most brands use tetra-ethyl of lead which is injurious. Avoid the use of hot water and soap unless specifically specified. Avoid the use of ammonia unless specifically specified. ALWAYS RUB WITH THE NAP - NEVER AGAINST IT.

The following procedure should be followed in removing spots and stains:

GREASE SPOTS AND OIL. Excessive grease should be scraped off with a dull knife. A cloth moistened with HUDSON UPHOLSTERY CLEANER should be applied to the spot and rubbed lightly in the direction of the nap.

CHEWING GUM. Moisten the gum with a few drops of HUDSON UPHOLSTERY CLEANER and scrape it off with a dull knife.

CANDY (except chocolate) should be removed by rubbing with a cloth and very hot water. If an oily spot remains after drying, sponge lightly in the direction of the nap with HUDSON UPHOLSTERY CLEANER.

Chocolate stains should be sponged with LUKEWARM WATER. After drying, sponge lightly with HUDSON UPHOLSTERY CLEANER.

ICE CREAM. These stains should be removed by sponging with lukewarm soapsuds (neutral soap). Rinse with cold water and allow to dry. If an oil spot remains, sponge it with HUDSON UPHOLSTERY CLEANER.

BLOOD. Sponge with a cloth moistened in COLD WATER.

Apply a few drops of ammonia to the stained area and sponge again with COLD WATER.

CAUTION: Warm water will set the stain.

FRUIT AND WINE. Apply a little hot water directly to the stain. Rub the spot lightly with a cloth moistened in hot water. Allow it to dry, then sponge lightly with HUDSON UPHOLSTERY CLEANER.

CAUTION: Soap or heat applied to fruit stains will cause the stain to spread and set.

COSMETICS. To remove lipstick and other grease cosmetics, apply a little HUDSON UPHOLSTERY CLEANER and absorb it with a blotter. Repeat as necessary to obtain satisfactory results.

RUST. These stains should be removed by sponging with a cloth and warm soapsuds (neutral soap).

The appearance of the cleaned area can be greatly improved by brushing it briskly with a whisk broom.

MOHAIR UPHOLSTERY. Matted pile on mohair upholstery can be renovated by applying a damp cloth and steaming with a hot iron.

LEATHER AND IMITATION LEATHER. To clean leather and imitation leather, use lukewarm water. Neutral soapsuds may be used sparingly. An occasional application of saddle soap will help to preserve the surface and prevent deterioration.

CARE OF FOLDING TOPS. Soiled spots on Convertible model folding tops are often permitted to remain for fear of discoloring the top material.

The application of Hudson Dry Cleaner on soiled spots will remove them satisfactorily. The proper method is to select an area slightly larger than the area to be cleaned and rub lightly in a circular manner, gradually working toward the center.

CHROMIUM-PLATED FINISH requires little attention other than an occasional wiping off with a damp cloth. In winter in certain localities when salt and calcium chloride is used to melt ice and snow, these parts should be cleaned more frequently to prevent corrosion and rust.

Bumper bars frequently become scratched and scuffed, due to contact with other cars and if the damaged areas are not protected rust may accumulate and produce an unsightly appearance. A coating of clear lacquer or application of HUDSON CHROME POLISH will give the needed protection. If rust has already appeared, cleaning the area with HUDSON CHROME POLISH, which contains no grit or harmful chemicals, will remove the rust and prevent its reappearance.

CARE OF THE FINISH. The high luster finish lacquer on HUDSON cars can be preserved indefinitely if given proper attention.

Avoid wiping the finish when it is heavily coated with dust - it is better to wash it carefully to avoid scratching. Spilling anti-freeze solutions or alcohol on the finish is extremely dangerous and great care should be taken when adding or checking these solutions. The spots should be rinsed immediately with large quantities of water.

Due to a slight dulling of the finish after exposure to the weather, it is recommended that the finish be occasionally cleaned and polished with HUDSON CLEANER AND WAX BASE POLISH to restore the luster. However, if a more lasting high luster is desired, it may be obtained by applying a film of HUDSON WAX POLISH.

Hudson polishes are carefully compounded and are entirely free of destructive acids and abrasives. Avoid the use of so-called "speed cleaners and polishes" as they do a quick job of cleaning but at the same time remove considerable of the lacquer. Avoid polishing the car if it has been standing in the sun. It is better to apply the polish when the body has cooled.

REFERENCES

Dr Sutton

SOURCE OF INFORMATION	DATE	SUBJECT
		1940 8 Cylinder
		4569927

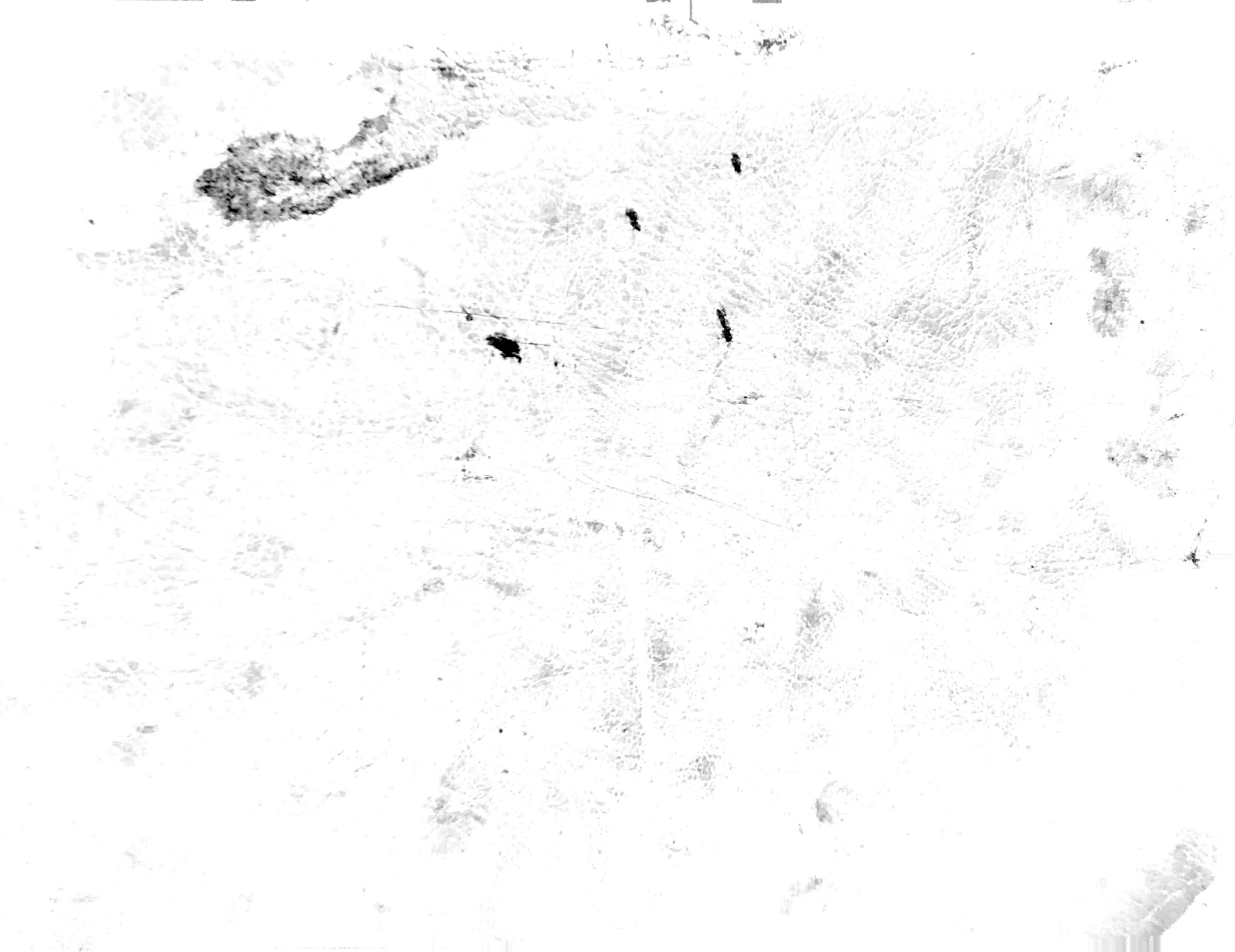

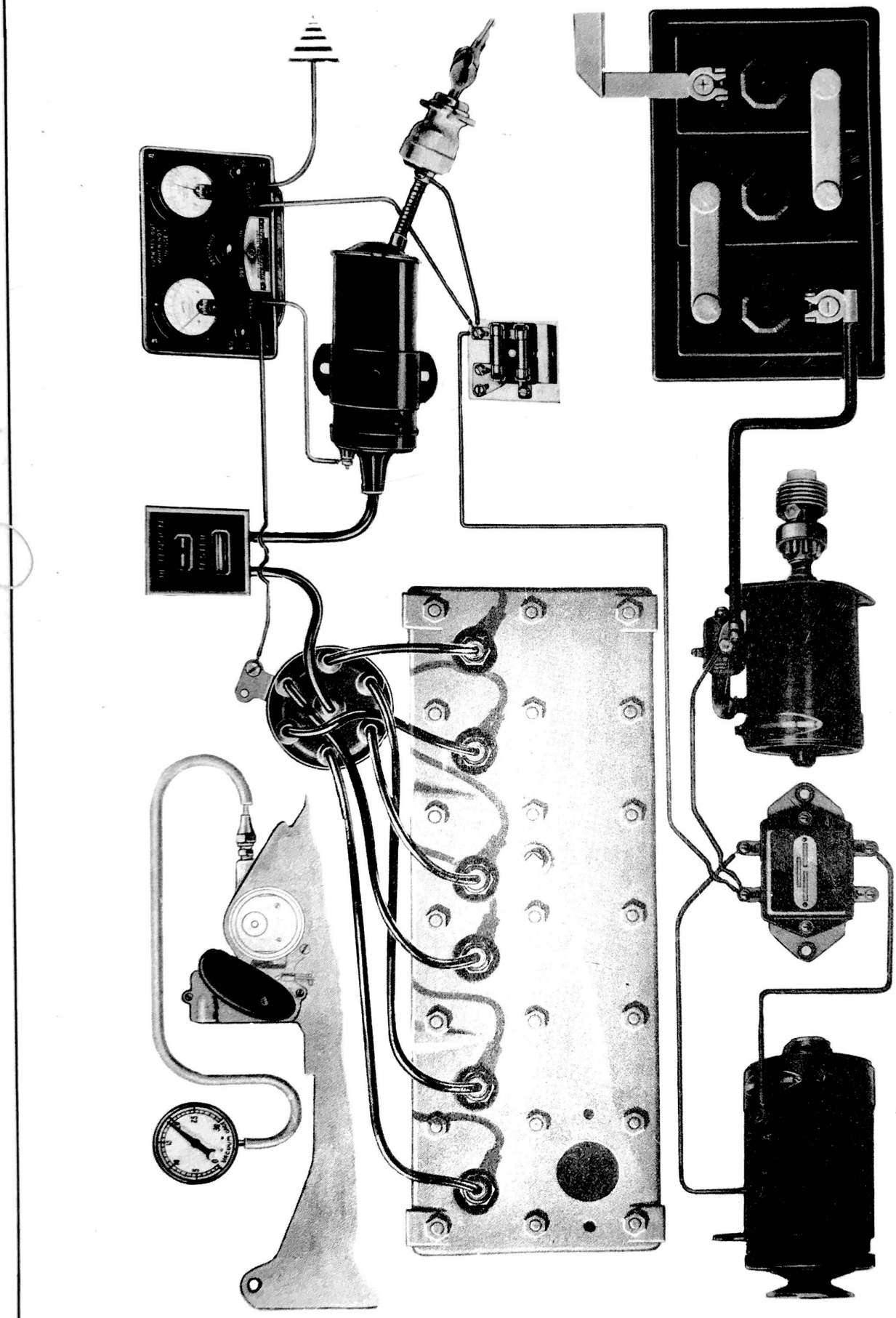

Figure 7 - Engine Overall Check

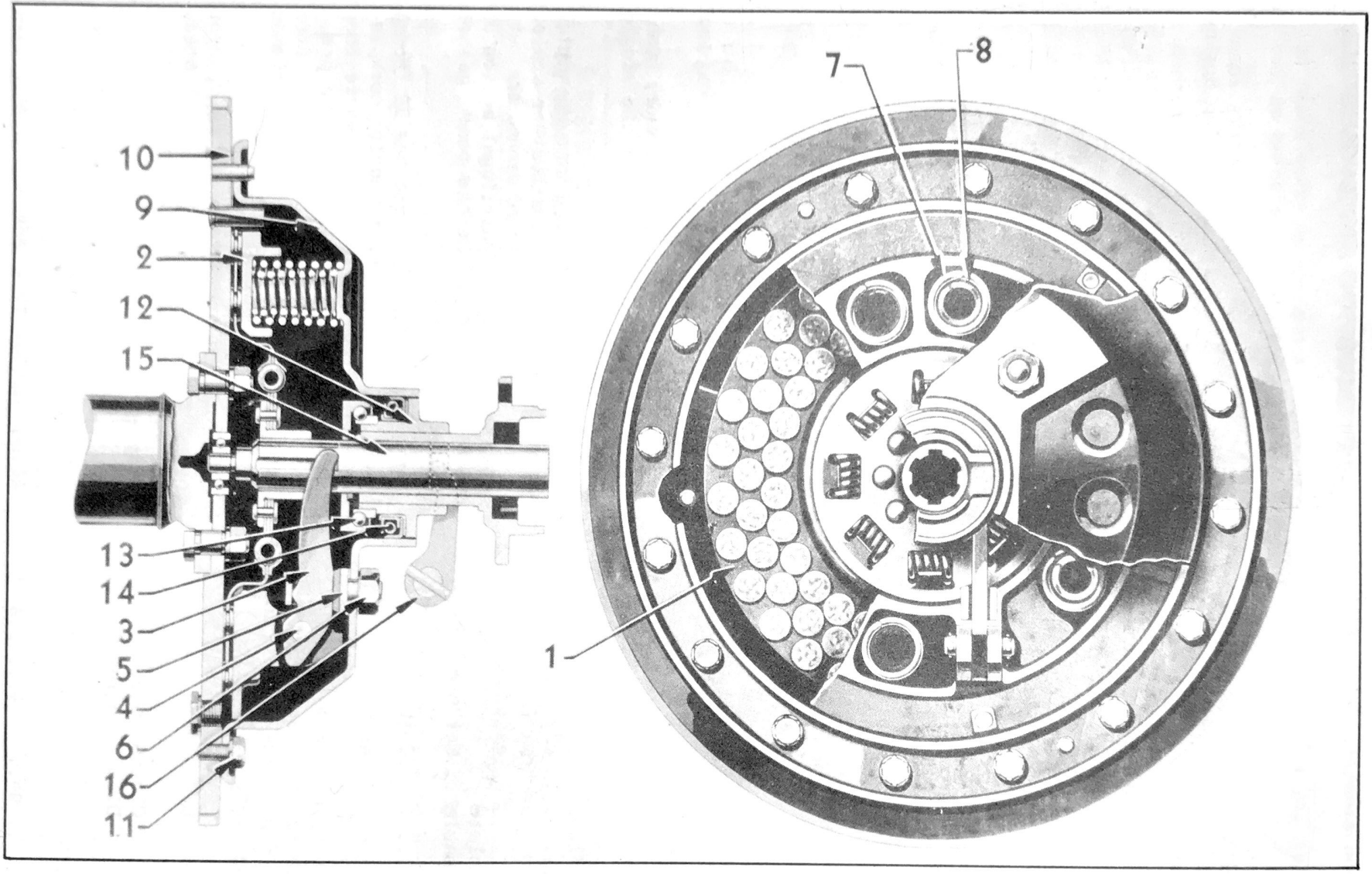

Figure 187 - Clutch Assembly

1. Clutch driving plate assembly
2. Clutch pressure plate
3. Clutch throwout finger
4. Clutch throwout finger pin
5. Clutch throwout finger retainer
6. Clutch throwout finger retainer nut
7. Clutch engaging spring
8. Clutch engaging spring--inner
9. Clutch cover
10. Clutch cover gasket
11. Clutch cover bolt
12. Clutch collar assembly
13. Clutch throwout bearing
14. Clutch oil seal
15. Main drive gear
16. Clutch shifter yoke

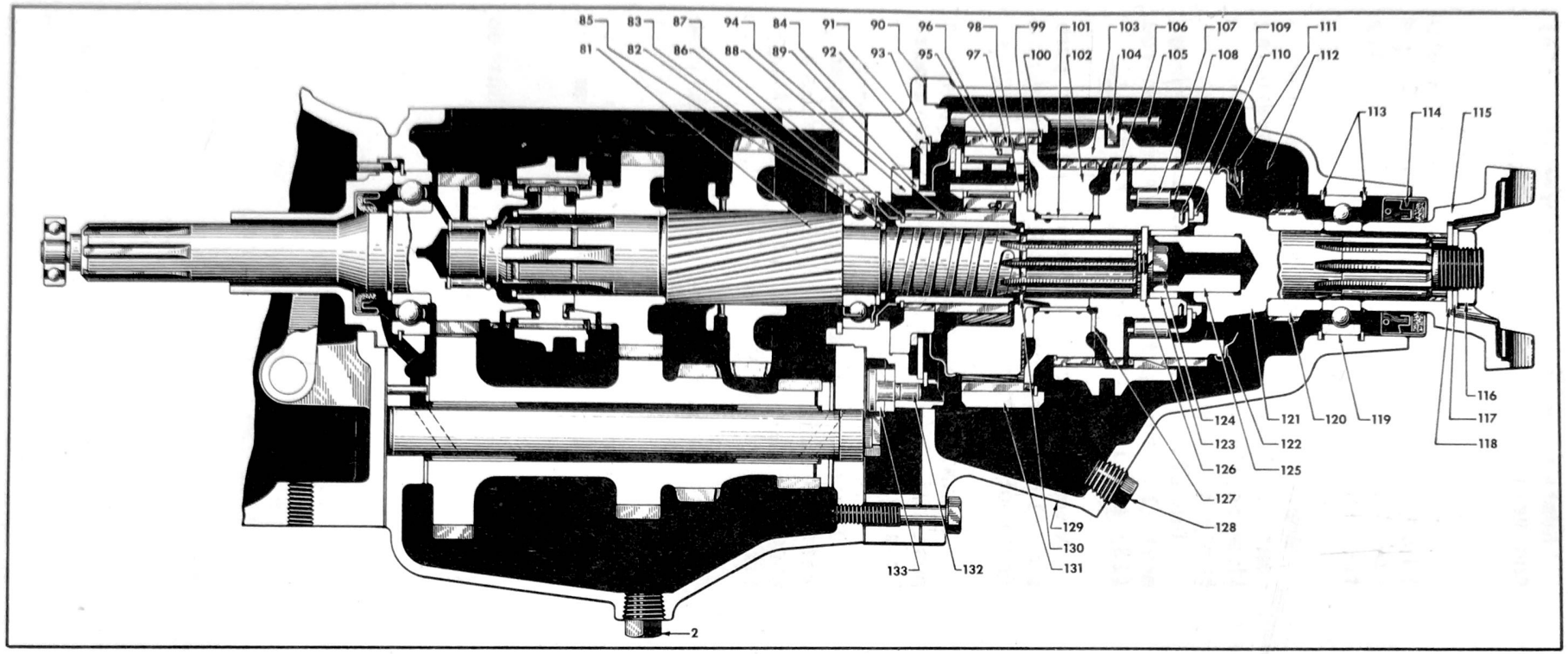

Figure 248 - Transmission Overdrive Section

81. Transmission mainshaft.
82. Transmission mainshaft rear bearing front snap ring.
83. Transmission mainshaft rear bearing.
84. Overdrive to transmission case gasket.
85. Transmission mainshaft snap ring.
86. Transmission mainshaft oil baffle.
87. Stationary gear snap ring.
88. Stationary gear plate.
89. Stationary gear balk ring.
90. Housing gasket.
91. Housing adapter.
92. Pinion cage oil collector ring cover.
93. Pinion cage oil collector ring cover snap ring.
94. Stationary gear.
95. Pinion - wide.
96. Pinion spring.
97. Pinion - narrow.
98. Pinion cage.
99. Clutch hub thrust washer - front.
100. Ring gear snap ring.
101. Clutch hub bushing.
102. Clutch hub.
103. Clutch hub sleeve.
104. Shifter rail fork.
105. Shifter rail fork guide pin.
106. Free wheeling cam.
107. Free wheeling cam roller.
108. Free wheeling cam roller retainer.
109. Free wheeling cam roller retainer spring.
110. Free wheeling cam roller retainer snap ring.
111. Shifter rail retractor spring.
112. Shifter rail.
113. Mainshaft bearing snap ring.
114. Mainshaft oil seal assembly.
115. Companion flange.
116. Companion flange to mainshaft nut.
117. Companion flange to mainshaft lock washer.
118. Companion flange to mainshaft plain washer.
119. Mainshaft bearing.
120. Speedometer gear.
121. Mainshaft assembly.
122. Mainshaft oil collector ring.
123. Mainshaft pilot bushing.
124. Free wheeling cam bolt.
125. Mainshaft pilot.
126. Free wheeling cam retaining washer.
127. Clutch hub thrust washer - rear.
128. Housing drain plug.
129. Housing.
130. Pinion cage retaining snap ring.
131. Ring gear.
132. Interlock lever fulcrum.
133. Interlock lever.

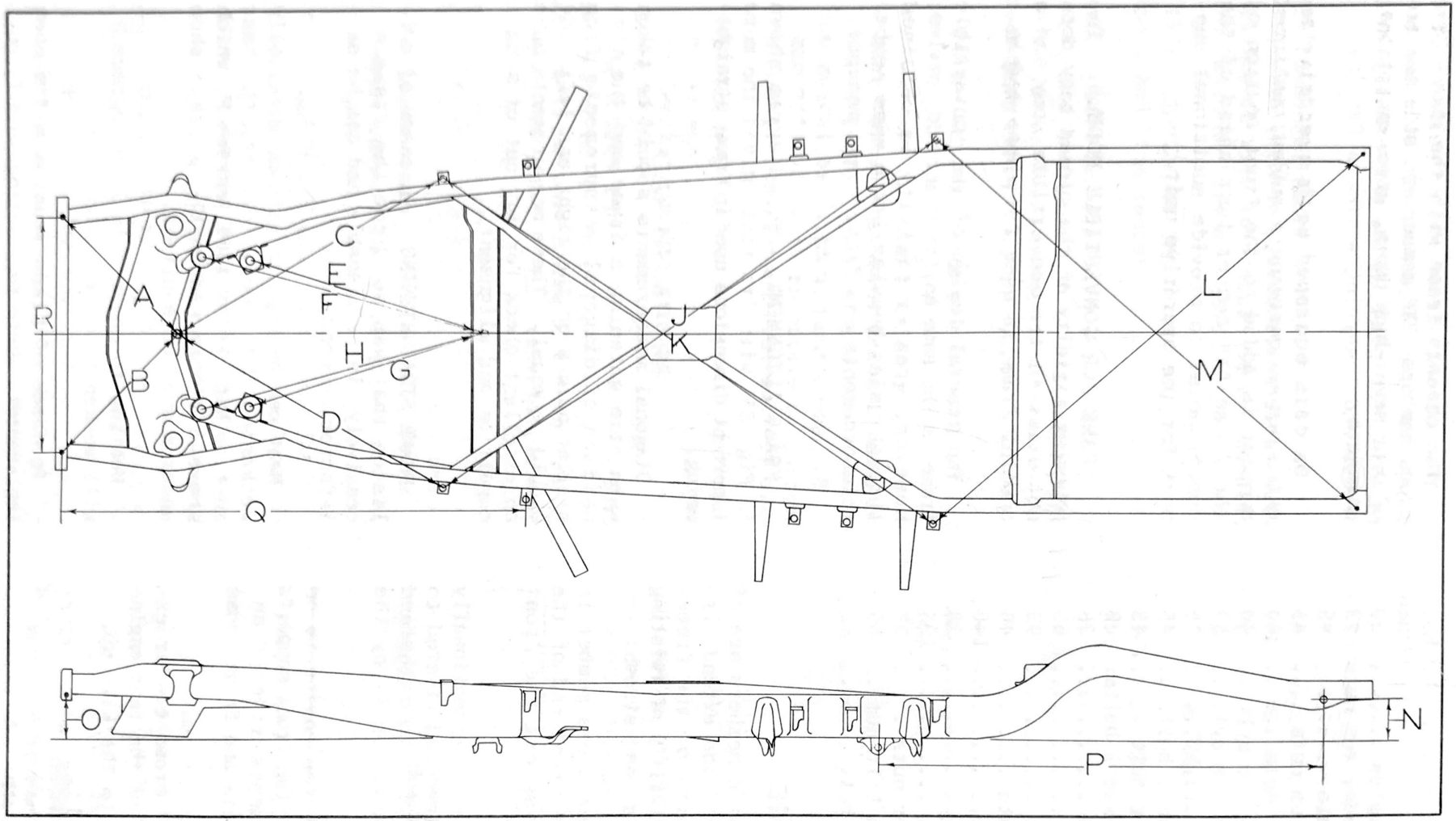

Figure 351 - 1941 FRAME DIMENSIONS

Model	W.B.	A	B	C	D	E	F	G	H	J	K	L	M	N	O	P	Q	R
10	116	21-3/16	21-3/16	35-9/16	35-9/16	30-31/32		30-31/32		78-3/4	78-3/4	74-3/4	71-3/4	4-29/32	5-45/64	57-5/64	54-15/16	30-1/2
11	116	21-3/16	21-3/16	39-25/32	39-25/32	30-31/32		30-31/32		78-3/4	78-3/4	74-41/64	74-41/64	4-15/16	5-49/64	57-5/64	59-15/16	30-1/2
12	121	21-3/16	21-3/16	39-25/32	39-25/32	30-31/32		30-31/32		78-3/4	78-3/4	74-41/64	74-41/64	4-15/16	5-49/64	57-5/64	59-15/16	30-1/2
14	121	21-3/16	21-3/16	39-25/32	39-25/32		37-5/8		37-5/8	78-3/4	78-3/4	74-41/64	74-41/64	4-15/16	5-49/64	57-5/64	59-15/16	30-1/2
15	121	21-3/16	21-3/16	39-25/32	39-25/32		37-5/8		37-5/8	78-3/5	78-3/4	74-41/64	74-41/64	4-15/16	5-49/64	57-5/64	59-15/16	30-1/2
17	128	21-3/16	21-3/16	39-25/32	39-25/32		37-5/8		37-5/8	84-17/32	84-17/32	74-41/64	74-41/64	4-61/64	5-51/64	57-5/64	59-15/16	30-1/2
18	128	21-3/16	21-3/16	39-25/32	39-25/32	30-31/32		30-31/32		84-17/32	84-17/32	74-41/64	74-41/64	4-61/64	5-51/64	57-5/64	59-15/16	30-1/2

LUBRICATION HUDSON 1941 MODELS

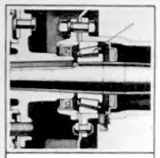

10,000 MILES
REAR WHEEL BEARING
USE MILLED SODIUM SOAP BASE LUBRICANT
CAPACITY—1½ OUNCES



WITH SEASON TRANSMISSION
USE GEAR OIL
SUMMER S.A.E. 90 E.P.
WINTER S.A.E. 80 E.P.
CAPACITY—3 POUNDS
WITH OVERDRIVE—3½ POUNDS
CHECK LEVEL FREQUENTLY



5000 MILES
CLUTCH
USE HUDSONITE CLUTCH LUBRICANT
CAPACITY—½ PINT



1000 MILES
BRAKE AND CLUTCH PEDAL BEARINGS FITTING
USE VISCOUS GREASE
2000 MILES
BRAKE, CLUTCH AND THROTTLE CONTROL LINKAGE
USE ENGINE OIL



1000 MILES
CHECK LEVEL
BRAKE MASTER CYLINDER
USE ONLY GENUINE HUDSON HYDRAULIC BRAKE FLUID NO. 21 FOR ALL TEMPERATURES



2000 MILES
STARTING MOTOR FRONT AND REAR BEARINGS
USE ENGINE OIL



WITH SEASON DIFFERENTIAL
USE GEAR OIL
SUMMER AND WINTER
S.A.E. 90 E.P.
CHECK LEVEL FREQUENTLY
CAPACITY—2¾ POUNDS

1000 MILES
SPRING SHACKLE
USE VISCOUS GREASE



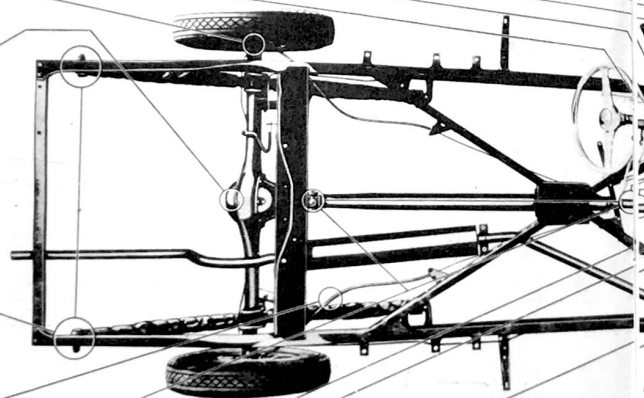

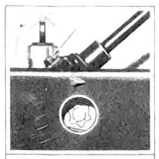

WITH SEASON
STEERING GEAR
USE GEAR OIL
SUMMER AND WINTER
S.A.E. 90 E.P.

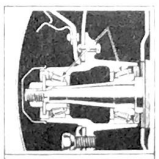

10,000 MILES
FRONT WHEEL BEARINGS
USE MILLED SODIUM SOAP BASE LUBRICANT
CAPACITY—4 OUNCES



2000 MILES
CRANKCASE
DRAIN AND REFILL ENGINE OIL
(SEE OIL SPECIFICATIONS)
CHECK LEVEL FREQUENTLY



1000 MILES
BATTERY
ADD DISTILLED WATER TO KEEP PLATES COVERED

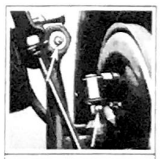

1000 MILES
UPPER SUPPORT ARM ECCENTRIC BUSHING
1-FITTING
STEERING SPINDLE PIVOT PIN
1-FITTING
USE VISCOUS GREASE



1000 MILES
UPPER SUPPORT ARM PIVOT BUSHING
4-FITTINGS
USE VISCOUS GREASE



1000 MILES
LOWER SUPPORT ARM TO SUPPORT PIVOT BUSHING
1-FITTING
USE VISCOUS GREASE

1000 MILES
LOWER SUPPORT ARM PIVOT BUSHING
4-FITTINGS
DRAG LINK—FRONT END
1-FITTING
USE VISCOUS GREASE



5000 MILES
BRAKE CONDUITS AND CABLES
VISCOUS GREASE



1000 MILES
UNIVERSAL JOINT SPLINE
USE VISCOUS GREASE
20,000 MILES
DISASSEMBLE, CLEAN AND REPACK NEEDLE ROLLER BEARINGS
USE VISCOUS GREASE



1000 MILES
CLUTCH RELEASE BEARING
USE VISCOUS GREASE



2000 MILES
DISTRIBUTOR
ADVANCE CAM—HIGH TEMPERATURE GREASE
CONTACT ARM PIVOT—ENGINE OIL
CUP OF SHAFT—ENGINE OIL
WICK—SHAFT GREASE CUP
HIGH TEMPERATURE GREASE
WICK—SHAFT OIL CUP—ENGINE OIL



2000 MILES
GENERATOR BEARINGS
USE ENGINE OIL

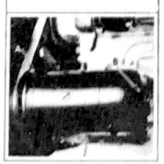

2000 MILES
AIR CLEANER—STANDARD
WASH IN GASOLINE AND LUBRICATE WITH ENGINE OIL—SEE CHART AS USED IN ENGINE
AIR CLEANER—OIL BATH
WITHDRAW FILTER AND WASH IN GASOLINE
POUR 1 PINT OF SAME GRADE AS IN ENGINE IN CLEANER BODY AND REASSEMBLE



1000 MILES
WATER PUMP SHAFT
USE ALUMINUM SOAP GREASE

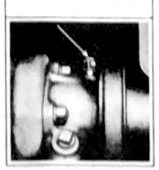

10,000 MILES
FRONT WHEEL BEARINGS
USE MILLED SODIUM SOAP BASE LUBRICANT
CAPACITY—4 OUNCES

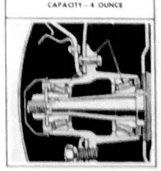

1000 MILES
UPPER SUPPORT ARM ECCENTRIC BUSHING
1-FITTING
STEERING SPINDLE PIVOT PIN
1-FITTING
USE VISCOUS GREASE



1000 MILES
DRAG LINK—REAR END
1-FITTING
USE VISCOUS GREASE



1000 MILES
TIE ROD ENDS
4-FITTINGS
USE VISCOUS GREASE



1000 MILES
LOWER SUPPORT ARM TO SUPPORT PIVOT BUSHING
1-FITTING
USE VISCOUS GREASE



GENERAL LUBRICATION INFORMATION

ENGINE LUBRICATION

USE OILS OF SAE VISCOSITY NUMBERS

CAPACITY

6 CYLINDER	5 QTS.	6 QTS.	7 QTS.
8 CYLINDER	5 QTS.	6 QTS.	7 QTS.

REFILL CAPACITY

6 CYLINDER	4 QTS.	5 QTS.	6 QTS.
8 CYLINDER	4 QTS.	5 QTS.	6 QTS.

ENGINE OIL SHOULD BE DRAINED AFTER EXPIRATION OF FIRST 500 MILES OF DRIVING AND THEREAFTER AT INTERVALS OF 1,000 MILES UNLESS SEVERE CONDITIONS OR INDIVIDUAL DRIVING CHARACTERISTICS WARRANT MORE FREQUENT CHANGING. REFER ACCORDINGLY TO THE FOLLOWING RECOMMENDATIONS:

15° to 70°	Use S.A.E. 20
0° to 32°	Use S.A.E. 20
70° to 10°	Use 20 W
40° to 0°	Use 10 W
10° to 30°	Use 10 W Winter

TRANSMISSION (AND OVERDRIVE)

TRANSMISSION LUBRICANT SHOULD BE CHANGED EVERY 1,000 MILES. WHEN CHECKING LEVEL BE SURE CAR HAS BEEN PERMITTED TO STAND LONG ENOUGH FOR OIL TO DRAIN TO SUMP. THIS REQUIRES ONE HOUR.

ACTUAL LEVEL

S.A.E. 90 E.P. IS RECOMMENDED FOR ALL SEASONS. LUBRICANT SHOULD BE OF A MILD EXTREME PRESSURE NATURE AND MUST BE OF NON-FOAMING TYPE.

REAR AXLE LUBRICANT

REAR AXLE LUBRICANT LEVEL SHOULD BE CHECKED EVERY 1,000 MILES. WHEN CHECKING LEVEL BE SURE CAR HAS BEEN PERMITTED TO STAND LONG ENOUGH FOR OIL TO DRAIN TO SUMP. THIS REQUIRES ONE HOUR. ACTUAL LEVEL

S.A.E. 90 E.P. IS RECOMMENDED FOR ALL SEASONS. LUBRICANT SHOULD BE OF A MILD EXTREME PRESSURE NATURE AND MUST BE OF NON-FOAMING TYPE.

SPRING COVERS

REAR SPRING COVERS SHOULD BE REMOVED AND REPACKED WITH

PROPELLER SHAFT AND UNIVERSAL JOINTS

UNIVERSAL JOINTS ARE LUBRICATED AT TIME OF ASSEMBLY AT INTERVALS OF 20,000 MILES THE PROPELLER SHAFT SHOULD BE REMOVED AND UNIVERSAL JOINTS DISASSEMBLED AND REPACKED WITH VISCOUS CHASSIS GREASE.

THE SPLINE SHAFT SHOULD BE LUBRICATED AT INTERVALS OF 1,000 MILES WITH VISCOUS CHASSIS GREASE. THE PIPE PLUG IN THE FRONT END SHOULD BE REMOVED AND A SUITABLE GREASE FITTING INSTALLED. AS SOON AS THE GREASE IS FORCED OUT AT THE REAR END OF THE SLIP JOINT, REMOVE THE GREASE FITTING AND REPLACE THE PIPE PLUG.

BODY LUBRICATION

DOOR DOVETAIL WICKS AND DOOR STRIKER WICKS SHOULD BE LUBRICATED WITH A FEW DROPS OF LIGHT ENGINE OIL EVERY 1,000 MILES.

LOWER FRONT DOOR HINGE SHOULD BE LUBRICATED WITH A FEW DROPS OF ENGINE OIL THROUGH OIL HOLE ACCESSIBLE WHEN DOOR IS OPENED. EVERY 1,000 MILES.

RUBBER BUMPERS AND DOOR STRIKER CONTACT SURFACES SHOULD BE LUBRICATED WITH A FEW DROPS OF ENGINE OIL EVERY 1,000 MILES.

TIRE PRESSURES

MAINTAINING CORRECT TIRE PRESSURE IS ESSENTIAL TO OBTAIN MAXIMUM TIRE LIFE.

CHECK PRESSURES AND INFLATE TO FOLLOWING PRESSURES AT LEAST ONCE A WEEK.

SIZES	FRONT COLD	FRONT HOT	REAR COLD	REAR HOT
All sizes except				
7.00 x 16	26 lbs.	29 lbs.	30 lbs.	33 lbs.
6.00 x 16	32 lbs.	35 lbs.	32 lbs.	35 lbs.

COOLING SYSTEM

CHECK WATER LEVEL FREQUENTLY

IN WINTER CHECK ANTI-FREEZE STRENGTH

CAPACITY OF COOLING SYSTEMS (5 U.S. GALLONS)

6 CYLINDER	13 QTS. (10 GAL. — 3 QTS.)
8 CYLINDER	14 QTS. (11 GAL. — 3 QTS.)

IF CAR HAS BEEN STANDING FOR SOME TIME AND TIRES ARE COOL, INFLATE TO COLD PRESSURES. IF TIRES ARE WARM FROM RUNNING, INFLATE TO HOT PRESSURES.

COPYRIGHT 1941 HUDSON MOTOR CAR COMPANY

LUBRICATION HUDSON 1941 MODELS

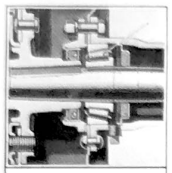

10,000 MILES
REAR WHEEL BEARING
USE MILLED SODIUM SOAP BASE LUBRICANT
CAPACITY—1½ OUNCES

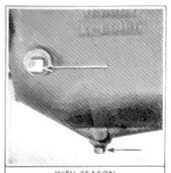

WITH SEASON TRANSMISSION
USE GEAR OIL
SUMMER S.A.E. 90 E.P.
WINTER S.A.E. 80 E.P.
CAPACITY—2 POUNDS
WITH OVERDRIVE—3¼ POUNDS
CHECK LEVEL FREQUENTLY

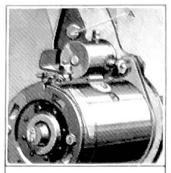

5000 MILES
CLUTCH
USE HUDSONITE CLUTCH LUBRICANT
CAPACITY—½ PINT



1000 MILES
BRAKE AND CLUTCH PEDAL BEARINGS FITTING
USE VISCOUS GREASE
2000 MILES
BRAKE, CLUTCH AND THROTTLE CONTROL LINKAGE
USE ENGINE OIL

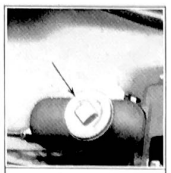

1000 MILES
CHECK LEVEL
BRAKE MASTER CYLINDER
USE ONLY GENUINE HUDSON HYDRAULIC BRAKE FLUID NO. 21 FOR ALL TEMPERATURES

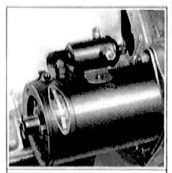

2000 MILES
STARTING MOTOR FRONT AND REAR BEARINGS
USE ENGINE OIL

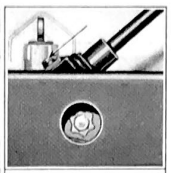

WITH SEASON
STEERING GEAR
USE GEAR OIL
SUMMER AND WINTER
S.A.E. 90 E.P.

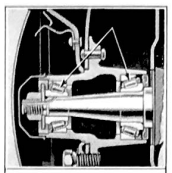

10,000 MILES
FRONT WHEEL BEARINGS
USE MILLED SODIUM SOAP BASE LUBRICANT
CAPACITY—4 OUNCES



2000 MILES
CRANKCASE
DRAIN AND REFILL ENGINE OIL (SEE OIL SPECIFICATIONS)
CHECK LEVEL FREQUENTLY



1000 MILES
BATTERY
ADD DISTILLED WATER TO KEEP PLATES COVERED

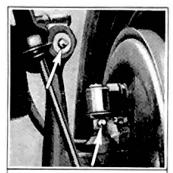

1000 MILES
UPPER SUPPORT ARM ECCENTRIC BUSHING
1-FITTING
STEERING SPINDLE PIVOT PIN
1-FITTING
USE VISCOUS GREASE

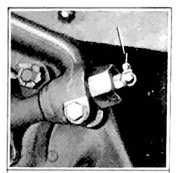

1000 MILES
UPPER SUPPORT ARM PIVOT BUSHING
4-FITTINGS
USE VISCOUS GREASE



WITH SEASON DIFFERENTIAL
USE GEAR OIL
SUMMER AND WINTER
S.A.E. 90 E.P.
CHECK LEVEL FREQUENTLY
CAPACITY—2¾ POUNDS



1000 MILES
LOWER SUPPORT ARM TO SUPPORT PIVOT BUSHING
1-FITTING
USE VISCOUS GREASE

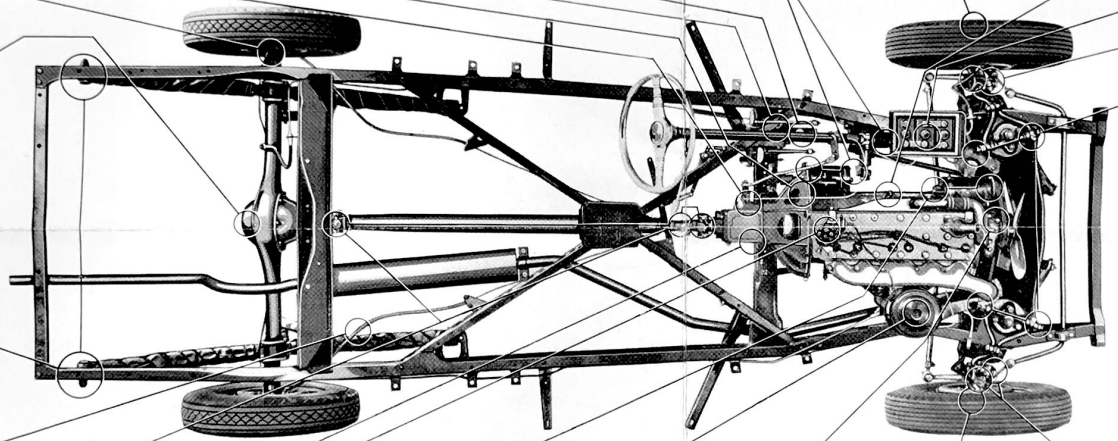

1000 MILES
SPRING SHACKLE
USE VISCOUS GREASE



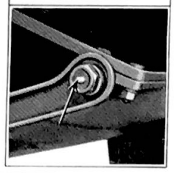

1000 MILES
LOWER SUPPORT ARM PIVOT BUSHING
4-FITTINGS
DRAG LINK—FRONT END
1-FITTING
USE VISCOUS GREASE

5000 MILES
BRAKE CONDUITS AND CABLES
VISCOUS GREASE



1000 MILES
UNIVERSAL JOINT SPLINE
USE VISCOUS GREASE
20,000 MILES
DISASSEMBLE, CLEAN AND REPACK NEEDLE ROLLER BEARINGS
USE VISCOUS GREASE

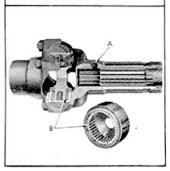

1000 MILES
CLUTCH RELEASE BEARING
USE VISCOUS GREASE

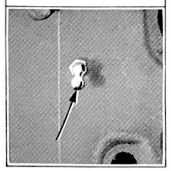

2000 MILES
DISTRIBUTOR
ADVANCE CAM—HIGH TEMPERATURE GREASE
CONTACT ARM PIVOT—ENGINE OIL
TOP OF SHAFT—ENGINE OIL
4 CYL.—SHAFT GREASE CUP
HIGH TEMPERATURE GREASE
8 CYL.—SHAFT OIL CUP—ENGINE OIL

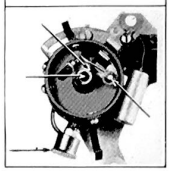

2000 MILES
GENERATOR BEARINGS
USE ENGINE OIL

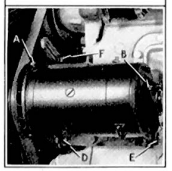

2000 MILES
AIR CLEANER—STANDARD
WASH IN GASOLINE AND LUBRICATE WITH ENGINE OIL—SAME GRADE AS USED IN ENGINE
AIR CLEANER—OIL BATH
WYBRANT FILTER AND WASH PARTS IN GASOLINE
POUR 1 PINT OIL SAME GRADE AS IN ENGINE IN CLEANER BODY AND REASSEMBLE



1000 MILES
WATER PUMP SHAFT
USE ALUMINUM SOAP GREASE

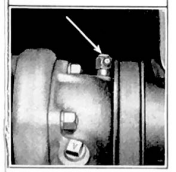

10,000 MILES
FRONT WHEEL BEARINGS
USE MILLED SODIUM SOAP BASE LUBRICANT
CAPACITY—4 OUNCE

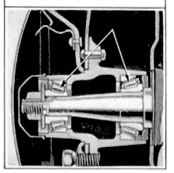

1000 MILES
UPPER SUPPORT ARM ECCENTRIC BUSHING
1-FITTING
STEERING SPINDLE PIVOT PIN
1-FITTING
USE VISCOUS GREASE

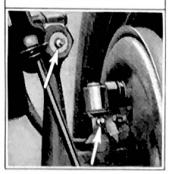

1000 MILES
DRAG LINK—REAR END
1-FITTING
USE VISCOUS GREASE

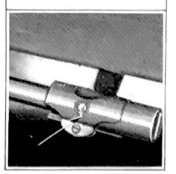

1000 MILES
TIE ROD ENDS
4-FITTINGS
USE VISCOUS GREASE

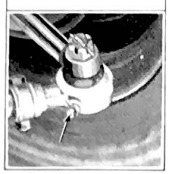

1000 MILES
LOWER SUPPORT ARM TO SUPPORT PIVOT BUSHING
1-FITTING
USE VISCOUS GREASE

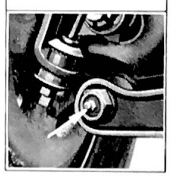

GENERAL LUBRICATION INFORMATION

ENGINE LUBRICATION

LEVEL SHOULD BE CHECKED FREQUENTLY

CAPACITY

6 CYLINDER.....5½ QTS. (4½ I.Q.—5¼ L)
8 CYLINDER.....9 QTS. (7 I.Q.—8½ L)

REFILL CAPACITY

6 CYLINDER.....4½ QTS. (3¾ I.Q.—4¼ L)
8 CYLINDER.....7 QTS. (6 I.Q.—6½ L)

ENGINE OIL SHOULD BE DRAINED AFTER EXPIRATION OF FIRST 500 MILES OF DRIVING AND THEREAFTER AT INTERVALS OF 2,000 MILES, UNLESS DUSTY CONDITIONS OR INDIVIDUAL DRIVING CHARACTERISTICS WARRANT MORE FREQUENT CHANGING. REFILL ACCORDING TO THE FOLLOWING RECOMMENDATIONS:

110° to 70°.....Use S.A.E. 30
90° to 32°.....Use S.A.E. 20
70° to 10°.....Use 20 W.
40° to −10°.....Use 10 W.
−10° to −30°.....Use 10 W. plus 10% kerosene

TRANSMISSION (AND OVERDRIVE)

TRANSMISSION LUBRICANT SHOULD BE CHECKED EVERY 1,000 MILES. WHEN CHECKING LEVEL BE SURE CAR HAS BEEN PERMITTED TO STAND LONG ENOUGH FOR OIL FOAM TO SUBSIDE. THIS INSURES CHECKING ACTUAL LEVEL.

S.A.E. 90 E.P. IS RECOMMENDED FOR SUMMER AND S.A.E. 80 E.P. FOR WINTER. LUBRICANT USED SHOULD BE OF A MILD EXTREME PRESSURE NATURE AND MUST BE NON-CORROSIVE.

REAR AXLE LUBRICANT

REAR AXLE LUBRICANT LEVEL SHOULD BE CHECKED EVERY 1,000 MILES. WHEN CHECKING LEVEL BE SURE CAR HAS BEEN PERMITTED TO STAND LONG ENOUGH FOR OIL FOAM TO SUBSIDE. THIS INSURES CHECKING ACTUAL LEVEL.

S.A.E. 90 E.P. IS RECOMMENDED FOR ALL SEASONS. LUBRICANT SHOULD BE OF A MILD EXTREME PRESSURE NATURE AND MUST BE NON-CORROSIVE.

SPRING COVERS

REAR SPRING COVERS SHOULD BE REMOVED AND REPACKED WITH VISCOUS CHASSIS GREASE EVERY 10,000 MILES.

PROPELLER SHAFT AND UNIVERSAL JOINTS

UNIVERSAL JOINTS ARE LUBRICATED AT TIME OF ASSEMBLY. AT INTERVALS OF 20,000 MILES THE PROPELLER SHAFT SHOULD BE REMOVED AND UNIVERSAL JOINTS DISASSEMBLED AND REPACKED WITH VISCOUS CHASSIS GREASE.

THE SPLINE SHAFT SHOULD BE LUBRICATED AT INTERVALS OF 1,000 MILES WITH VISCOUS CHASSIS GREASE. THE PIPE PLUG IN THE FRONT JOINT SHOULD BE REMOVED AND A SUITABLE GREASE FITTING INSTALLED. BE SURE FITTING IS REMOVED AFTER GREASING IS COMPLETED TO PREVENT DISTURBING THE BALANCE OF THE PROPELLER SHAFT.

BODY LUBRICATION

DOOR DOVETAIL WICKS AND DOOR STRIKER WICKS SHOULD BE LUBRICATED WITH A FEW DROPS OF LIGHT ENGINE OIL EVERY 1,000 MILES.

LOWER FRONT DOOR HINGE SHOULD BE LUBRICATED WITH A FEW DROPS OF ENGINE OIL, THROUGH OIL HOLE ACCESSIBLE WHEN DOOR IS OPENED, EVERY 1,000 MILES.

RUBBER BUMPERS AND DOOR STRIKER CONTACT SURFACES SHOULD BE LUBRICATED WITH A PENCIL LUBRICANT EVERY 1,000 MILES.

BE SURE TO WIPE OFF ALL EXCESS LUBRICANT.

TIRE PRESSURES

MAINTAINING CORRECT TIRE PRESSURE IS ESSENTIAL TO OBTAIN MAXIMUM TIRE LIFE.

CHECK PRESSURES AND INFLATE TO FOLLOWING PRESSURES AT LEAST ONCE A WEEK.

SIZES	FRONT COLD	FRONT HOT	REAR COLD	REAR HOT
All sizes except 16 x 5.50—26 lbs.	29 lbs.	30 lbs.	33 lbs.	
16 x 5.50 —32 lbs.	35 lbs.	32 lbs.	35 lbs.	

IF CAR HAS BEEN STANDING FOR SOME TIME AND TIRES ARE COOL, INFLATE TO COLD PRESSURES. IF TIRES ARE WARM FROM RUNNING, INFLATE TO HOT PRESSURES.

COOLING SYSTEM

CHECK WATER LEVEL FREQUENTLY

(IN WINTER CHECK ANTI-FREEZE STRENGTH)

CAPACITY OF COOLING SYSTEMS IS AS FOLLOWS:

6 CYLINDER.....13 QTS. (10¾ I.Q.—12¼ L)
8 CYLINDER.....18 QTS. (15 I.Q.—17 L)

COPYRIGHT 1941 HUDSON MOTOR CAR COMPANY

CODE	COLOR	CODE	COLOR	CODE	COLOR
BW	BROWN—WHITE TRACER	BLW	BLUE—WHITE TRACER	GW	GREEN—WHIT
BK	BLACK	BLR	BLUE—RED TRACER	Y	YELLOW
BKG	BLACK—GREEN TRACER	R	RED	YBK	YELLOW—BLA
BKBL	BLACK—BLUE TRACER	RW	RED—WHITE TRACER	YG	YELLOW—GRE
BKY	BLACK—YELLOW TRACER	RY	RED—YELLOW TRACER	YR	YELLOW—RED
BKR	BLACK—RED TRACER	RBK	RED—BLACK TRACER	W	WHITE
BKW	BLACK—WHITE TRACER	G	GREEN	WR	WHITE—RED T
BL	BLUE	GBK	GREEN—BLACK TRACER		
		B	BROWN		

E TRACER
CK TRACER
EN TRACER
TRACER
RACER

FUSE DATA

Circuit	No. Used	Capacity
LIGHTING	1	20 AMP.
ACCESSORY	1	20 AMP.
CLOCK	1	2 AMP.
DIRECTION INDICATOR	1	10 AMP.

INDICATING FUSE
INDICATING WIRE CONNECTOR

★ WIRING FOR DIRECTION INDICATOR

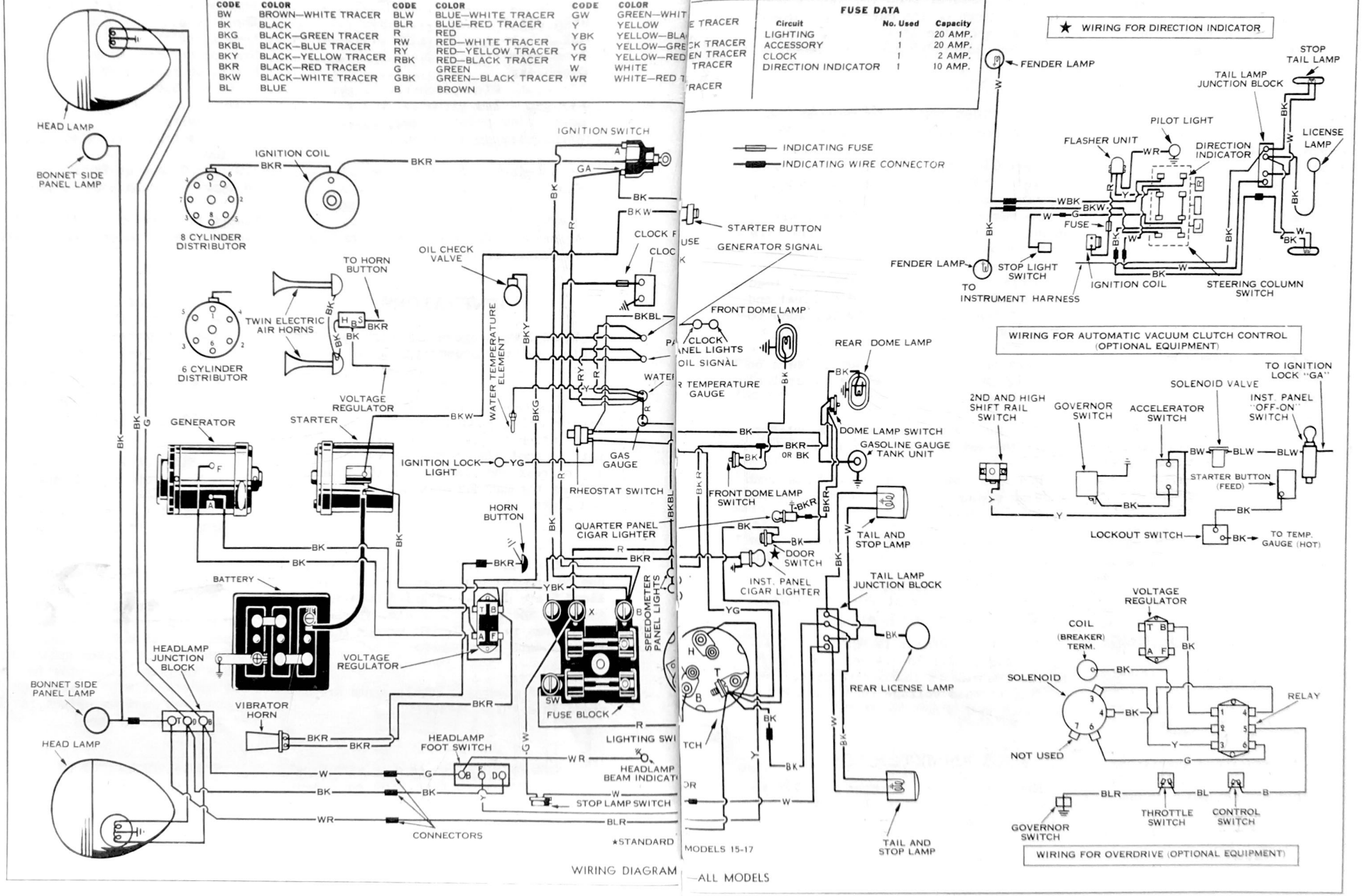

WIRING FOR AUTOMATIC VACUUM CLUTCH CONTROL (OPTIONAL EQUIPMENT)

WIRING FOR OVERDRIVE (OPTIONAL EQUIPMENT)

CODE	COLOR	CODE	COLOR	CODE	COLOR
BW	BROWN—WHITE TRACER	BLW	BLUE—WHITE TRACER	GW	GREEN—WHITE TRACER
BK	BLACK	BLR	BLUE—RED TRACER	Y	YELLOW
BKG	BLACK—GREEN TRACER	R	RED	YBK	YELLOW—BLACK TRACER
BKBL	BLACK—BLUE TRACER	RW	RED—WHITE TRACER	YG	YELLOW—GREEN TRACER
BKY	BLACK—YELLOW TRACER	RY	RED—YELLOW TRACER	YR	YELLOW—RED TRACER
BKR	BLACK—RED TRACER	RBK	RED—BLACK TRACER	W	WHITE
BKW	BLACK—WHITE TRACER	G	GREEN	WR	WHITE—RED TRACER
BL	BLUE	GBK	GREEN—BLACK TRACER		
		B	BROWN		

FUSE DATA

Circuit	No. Used	Capacity
LIGHTING	1	20 AMP.
ACCESSORY	1	20 AMP.
CLOCK	1	2 AMP.
DIRECTION INDICATOR	1	10 AMP.

INDICATING FUSE

INDICATING WIRE CONNECTOR

HEAD LAMP

BONNET SIDE PANEL LAMP

IGNITION COIL

8 CYLINDER DISTRIBUTOR

6 CYLINDER DISTRIBUTOR

IGNITION SWITCH

STARTER BUTTON

CLOCK FUSE

CLOCK

GENERATOR SIGNAL

OIL CHECK VALVE

TO HORN BUTTON

TWIN ELECTRIC AIR HORNS

WATER TEMPERATURE ELEMENT

FRONT DOME LAMP

CLOCK PANEL LIGHTS

OIL SIGNAL

WATER TEMPERATURE GAUGE

REAR DOME LAMP

VOLTAGE REGULATOR

GENERATOR

STARTER

IGNITION LOCK LIGHT

GAS GAUGE

RHEOSTAT SWITCH

DOME LAMP SWITCH

GASOLINE GAUGE TANK UNIT

FRONT DOME LAMP SWITCH

HORN BUTTON

QUARTER PANEL CIGAR LIGHTER

TAIL AND STOP LAMP

DOOR SWITCH

INST. PANEL CIGAR LIGHTER

TAIL LAMP JUNCTION BLOCK

BATTERY

SPEEDOMETER PANEL LIGHTS

HEADLAMP JUNCTION BLOCK

VOLTAGE REGULATOR

FUSE BLOCK

REAR LICENSE LAMP

BONNET SIDE PANEL LAMP

VIBRATOR HORN

LIGHTING SWITCH

HEADLAMP FOOT SWITCH

HEADLAMP BEAM INDICATOR

HEAD LAMP

STOP LAMP SWITCH

CONNECTORS

★STANDARD MODELS 15-17

TAIL AND STOP LAMP

WIRING DIAGRAM—ALL MODELS

★ WIRING FOR DIRECTION INDICATOR

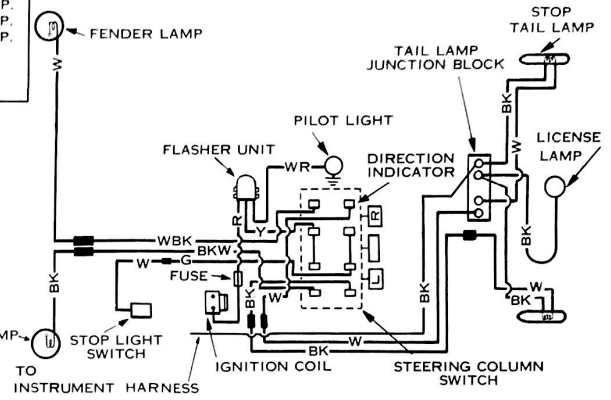

WIRING FOR AUTOMATIC VACUUM CLUTCH CONTROL (OPTIONAL EQUIPMENT)

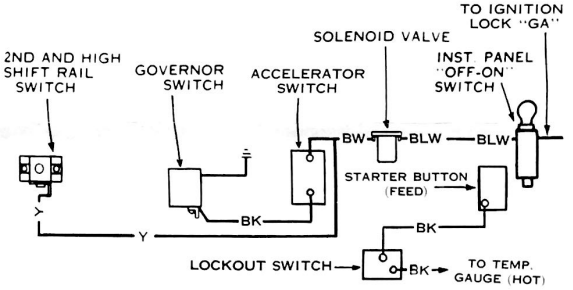

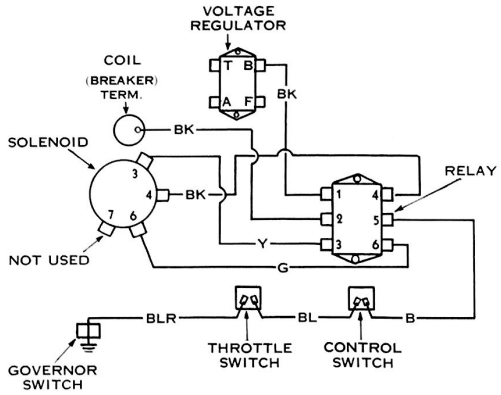

WIRING FOR OVERDRIVE (OPTIONAL EQUIPMENT)

CODE	COLOR	CODE	COLOR	CODE	COLOR
BW	BROWN—WHITE TRACER	BLW	BLUE—WHITE TRACER	GW	GREEN—WHITE TRACER
BK	BLACK	BLR	BLUE—RED TRACER	Y	YELLOW
BKG	BLACK—GREEN TRACER	R	RED	YBK	YELLOW—BLACK TRACER
BKBL	BLACK—BLUE TRACER	RW	RED—WHITE TRACER	YG	YELLOW—GREEN TRACER
BKY	BLACK—YELLOW TRACER	RY	RED—YELLOW TRACER	YR	YELLOW—RED TRACER
BKR	BLACK—RED TRACER	RBK	RED—BLACK TRACER	W	WHITE
BKW	BLACK—WHITE TRACER	G	GREEN	WR	WHITE—RED TRACER
BL	BLUE	GBK	GREEN—BLACK TRACER		
		B	BROWN		

FUSE DATA

Circuit	No. Used	Capacity
LIGHTING	1	20 AMP.
ACCESSORY	1	20 AMP.
CLOCK	1	2 AMP.
DIRECTION INDICATOR	1	10 AMP.

INDICATING FUSE

INDICATING WIRE CONNECTOR

HEAD LAMP

BONNET SIDE PANEL LAMP

8 CYLINDER DISTRIBUTOR

6 CYLINDER DISTRIBUTOR

IGNITION COIL

IGNITION SWITCH

STARTER BUTTON

CLOCK FUSE

CLOCK

GENERATOR SIGNAL

OIL CHECK VALVE

TO HORN BUTTON

TWIN ELECTRIC AIR HORNS

WATER TEMPERATURE ELEMENT

FRONT DOME LAMP

CLOCK PANEL LIGHTS

OIL SIGNAL

WATER TEMPERATURE GAUGE

REAR DOME LAMP

VOLTAGE REGULATOR

GENERATOR

STARTER

DOME LAMP SWITCH

GASOLINE GAUGE TANK UNIT

IGNITION LOCK LIGHT

GAS GAUGE

RHEOSTAT SWITCH

FRONT DOME LAMP SWITCH

HORN BUTTON

QUARTER PANEL CIGAR LIGHTER

TAIL AND STOP LAMP

DOOR SWITCH

INST. PANEL CIGAR LIGHTER

TAIL LAMP JUNCTION BLOCK

BATTERY

SPEEDOMETER PANEL LIGHTS

HEADLAMP JUNCTION BLOCK

VOLTAGE REGULATOR

REAR LICENSE LAMP

BONNET SIDE PANEL LAMP

VIBRATOR HORN

FUSE BLOCK

LIGHTING SWITCH

HEADLAMP FOOT SWITCH

HEADLAMP BEAM INDICATOR

HEAD LAMP

STOP LAMP SWITCH

CONNECTORS

*STANDARD MODELS 15-17

TAIL AND STOP LAMP

★ WIRING FOR DIRECTION INDICATOR

FENDER LAMP

STOP TAIL LAMP

TAIL LAMP JUNCTION BLOCK

PILOT LIGHT

FLASHER UNIT

DIRECTION INDICATOR

LICENSE LAMP

FUSE

FENDER LAMP

STOP LIGHT SWITCH

TO INSTRUMENT HARNESS

IGNITION COIL

STEERING COLUMN SWITCH

WIRING FOR AUTOMATIC VACUUM CLUTCH CONTROL (OPTIONAL EQUIPMENT)

TO IGNITION LOCK "GA"

SOLENOID VALVE

2ND AND HIGH SHIFT RAIL SWITCH

GOVERNOR SWITCH

ACCELERATOR SWITCH

INST. PANEL "OFF-ON" SWITCH

STARTER BUTTON (FEED)

LOCKOUT SWITCH

TO TEMP. GAUGE (HOT)

VOLTAGE REGULATOR

COIL (BREAKER) TERM.

SOLENOID

RELAY

NOT USED

GOVERNOR SWITCH

THROTTLE SWITCH

CONTROL SWITCH

WIRING FOR OVERDRIVE (OPTIONAL EQUIPMENT)

WIRING DIAGRAM—ALL MODELS